PIC18F04/05/14/15Q40

14/20-Pin, Low-Power, High-Performance Microcontroller with XLP Technology

Introduction

The PIC18-Q40 microcontroller family is available in 14/20-pin devices for real-time control applications. This family features a 12-bit ADC with Computation (ADCC) automating Capacitive Voltage Divider (CVD) techniques for advanced capacitive touch sensing, averaging, filtering, oversampling and threshold comparison and two 8-bit DAC modules. The family showcases a 16-bit PWM module which provides dual independent outputs on the same time base. Additional features include vectored interrupt controller with fixed latency for handling interrupts, system bus arbiter, Direct Memory Access (DMA) capabilities, UART with support for asynchronous, DMX, DALI and LIN protocols, SPI, I^2C and a programmable 32-bit Cyclic Redundancy Check (CRC) with memory scan. This family also includes memory features such as Memory Access Partition (MAP) to support users in data protection and bootloader applications and Device Information Area (DIA), which stores factory calibration values to help improve temperature sensor accuracy.

PIC18-Q40 Family Types

Table 1. Devices included in this data sheet

Device	Program Memory Flash (bytes)	Data SRAM (bytes)	Data EEPROM (bytes)	Memory Access Partition/ Device Information Area	I/O Pins/ Peripheral Pin Select	8-Bit Timer with HLT/ 16-Bit Timers	16-Bit Dual PWM/ CCP	Complimentary Waveform Generator	Signal Measurement Timer	Numerically Controlled Oscillator	Configurable Logic Cell	12-Bit ADCC (channels)	8-Bit DAC	Comparator/ Zero-Cross Detect	High-Low Voltage Detect	SPI / I^2C	UART/ UART with Protocol Support	Direct Memory Access (DMA)	Windowed Watchdog Timer	32-Bit CRC with Scanner	Vectored Interrupts	Peripheral Module Disable	Temperature Indicator
PIC18F04Q40	16k	1024	512	Y/Y	12/Y	2/3	3/1	1	1	1	4	11	2	2/1	1	2/1	2/1	4	Y	Y	Y	Y	Y
PIC18F05Q40	32k	2048	512	Y/Y	12/Y	2/3	3/1	1	1	1	4	11	2	2/1	1	2/1	2/1	4	Y	Y	Y	Y	Y
PIC18F14Q40	16k	1024	512	Y/Y	18/Y	2/3	3/1	1	1	1	4	17	2	2/1	1	2/1	2/1	4	Y	Y	Y	Y	Y
PIC18F15Q40	32k	2048	512	Y/Y	18/Y	2/3	3/1	1	1	1	4	17	2	2/1	1	2/1	2/1	4	Y	Y	Y	Y	Y

Table 2. Devices not included in this data sheet

Device	Program Memory Flash (bytes)	Data SRAM (bytes)	Data EEPROM (bytes)	Memory Access Partition/ Device Information Area	I/O Pins/ Peripheral Pin Select	8-Bit Timer with HLT/ 16-Bit Timers	16-Bit Dual PWM/ CCP	Complimentary Waveform Generator	Signal Measurement Timer	Numerically Controlled Oscillator	Configurable Logic Cell	12-Bit ADC^2 (channels)	8-Bit DAC	Comparator/ Zero-Cross Detect	High-Low Voltage Detect	SPI / I^2C	UART/ UART with Protocol Support	Direct Memory Access (DMA)	Windowed Watchdog Timer	32-Bit CRC with Scanner	Vectored Interrupts	Peripheral Module Disable	Temperature Indicator
PIC18F06Q40	64k	4096	512	Y/Y	12/Y	2/3	3/1	1	1	1	4	11	2	2/1	1	2/1	2/1	4	Y	Y	Y	Y	Y
PIC18F16Q40	64k	4096	512	Y/Y	18/Y	2/3	3/1	1	1	1	4	17	2	2/1	1	2/1	2/1	4	Y	Y	Y	Y	Y

Features

- C Compiler Optimized RISC Architecture
- Operating Speed:
  - DC – 64 MHz clock input
  - 62.5 ns minimum instruction cycle
- Four Direct Memory Access (DMA) Controllers:
  - Data transfers to SFR/GPR spaces from either Program Flash Memory, Data EEPROM or SFR/GPR spaces
  - User programmable source and destination sizes
  - Hardware and software triggered data transfers
- Vectored Interrupt Capability:
  - Selectable high/low priority
  - Fixed interrupt latency of three instruction cycles
  - Programmable vector table base address
  - Backwards compatible with previous interrupt capabilities
- 128-Level Deep Hardware Stack
- Low-Current Power-on Reset (POR)
- Configurable Power-up Timer (PWRT)
- Brown-out Reset (BOR)
- Low-Power BOR (LPBOR) Option
- Windowed Watchdog Timer (WWDT):
  - Watchdog Reset on too long or too short interval between watchdog clear events
  - Variable prescaler selection
  - Variable window size selection

Memory

- Up to 64 KB of Program Flash Memory
- Up to 4 KB of Data SRAM Memory
- 512 Bytes Data EEPROM
- Memory Access Partition: The Program Flash Memory can be partitioned into:
  - Application Block
  - Boot Block
  - Storage Area Flash (SAF) Block
- Programmable Code Protection and Write Protection
- Device Information Area (DIA) Stores:
  - Temperature indicator factory calibrated data

  - Fixed Voltage Reference measurement data
  - Microchip unique identifier
- Device Characteristics Information (DCI) Area Stores:
  - Program/erase row sizes
  - Pin count details
  - EEPROM size
- Direct, Indirect and Relative Addressing modes

Operating Characteristics

- Operating Voltage Range:
  - 1.8V to 5.5V
- Temperature Range:
  - Industrial: -40°C to 85°C
  - Extended: -40°C to 125°C

Power-Saving Functionality

- Doze: CPU and Peripherals Running at Different Cycle Rates (typically CPU is lower)
- Idle: CPU Halted While Peripherals Operate
- Sleep: Lowest Power Consumption
- Peripheral Module Disable (PMD):
  - Ability to selectively disable hardware module to minimize active power consumption of unused peripherals
- Low-Power Mode Features:
  - Sleep: < 1 µA typical @ 3V
  - Operating Current:
    - 48 µA @ 32 kHz, 3V, typical

Digital Peripherals

- Three 16-Bit Pulse-Width Modulators (PWM):
  - Dual outputs for each PWM module
  - Integrated 16-bit timer/counter
  - Double-buffered user registers for duty cycles
  - Right/Left/Center/Variable-Aligned modes of operation
  - Multiple clock and Reset signal selections
- Three 16-Bit Timers (TMR0/1/3)
- Two 8-Bit Timers (TMR2/4) with Hardware Limit Timer (HLT)
- Four Configurable Logic Cell (CLC):
  - Integrated combinational and sequential logic
- One Complimentary Waveform Generator (CWG):
  - Rising and falling edge dead-band control
  - Full-bridge, half-bridge, 1-channel drive
  - Multiple signal sources
  - Programmable dead band
  - Fault-shutdown input
- One Capture/Compare/PWM (CCP) module:
  - 16-bit resolution for Capture/Compare modes
  - 10-bit resolution for PWM mode

© 2020 Microchip Technology Inc.

- One Numerically Controlled Oscillator (NCO):
  - Generates true linear frequency control and increased frequency resolution
  - Input clock up to 64 MHz
- Signal Measurement Timer (SMT):
  - 24-bit timer/counter with prescaler
  - Several modes of operation like Time-of-Flight, Period and Duty Cycle measurement, etc.
- Data Signal Modulator (DSM):
  - Multiplex two carrier clocks, with glitch prevention feature
  - Multiple sources for each carrier
- Programmable CRC with Memory Scan:
  - Reliable data/program memory monitoring for Fail-Safe operation (e.g., Class B)
  - Calculate 32-bit CRC over any portion of Program Flash Memory
- Three UART modules:
  - One module (UART1) supports LIN master and slave, DMX mode, DALI gear and device protocols
  - Asynchronous UART, RS-232, RS-485 compatible
  - Automatic and user timed BREAK period generation
  - Automatic checksums
  - Programmable 1, 1.5, and two Stop bits
  - Wake-up on BREAK reception
  - DMA compatible
- Two SPI modules:
  - Configurable length bytes
  - Arbitrary length data packets
  - Transmit-without-receive and receive-without-transmit option
  - Transfer byte counter
  - Separate transmit and receive buffers with 2-byte FIFO and DMA capabilities
- One I^2C module, SMBus, PMBus™ Compatible:
  - Supports Standard-mode (100 kHz), Fast-mode (400 kHz) and Fast-mode plus (1 MHz) modes of operation
  - 7-bit and 10-bit addressing modes with address masking modes
  - Dedicated address, transmit and receive buffers and DMA capabilities
  - Bus collision detection with arbitration
  - Bus time-out detection and handling
  - I^2C, SMBus 2.0 and SMBus 3.0, and 1.8V input level selections
  - Separate Transmit and Receive Buffers with 2-byte FIFO and DMA capabilities
  - Multi-Master mode, including self-addressing
- Device I/O Port Features:
  - 12 I/O pins (PIC18F04/05/06Q40)
  - 18 I/O pins (PIC18F14/15/16Q40)
  - Individually programmable I/O direction, open-drain, slew rate and weak pull-up control
  - Interrupt-on-change on most pins
  - Three programmable external interrupt pins
- Peripheral Pin Select (PPS):
  - Enables pin mapping of digital I/O

Analog Peripherals

- Analog-to-Digital Converter with Computation (ADCC):
  - Up to 17 external channels
  - Up to 140 KSPS

  - Automated math functions on input signals:
    - Averaging, filter calculations, oversampling and threshold comparison
  - Operates in Sleep
  - Four internal analog channels
  - Hardware Capacitive Voltage Divider (CVD) Support:
    - Adjustable sample and hold capacitor array
    - Guard ring digital output drive
    - Automates touch sampling and reduces software size and CPU usage when touch or proximity sensing is required
- Two 8-Bit Digital-to-Analog Converters (DAC):
  - Buffered output available on two I/O pins
  - Internal connections to ADC and Comparators
- Two Comparators (CMP):
  - Four external inputs
  - Configurable output polarity
  - External output via Peripheral Pin Select
- Zero-Cross Detect (ZCD):
  - Detect when AC signal on pin crosses ground
- Voltage Reference:
  - Fixed Voltage Reference with 1.024V, 2.048V and 4.096V output levels
  - Internal connections to ADC, Comparator and DAC

Clocking Structure

- High-Precision Internal Oscillator Block (HFINTOSC):
  - Selectable frequencies up to 64 MHz
  - ±1% at calibration
  - Active Clock Tuning of HFINTOSC for better accuracy
- 32 kHz Low-Power Internal Oscillator (LFINTOSC)
- External 32 kHz Crystal Oscillator (SOSC)
- External High-Frequency Oscillator Block:
  - Three crystal/resonator modes
  - Digital Clock Input mode
  - 4x PLL with external sources
- Fail-Safe Clock Monitor:
  - Allows for operational recovery if external clock stops
- Oscillator Start-up Timer (OST):
  - Ensures stability of crystal oscillator sources

Programming/Debug Features

- In-Circuit Serial Programming™ (ICSP™) via Two Pins
- In-Circuit Debug (ICD) with Three Breakpoints via Two Pins
- Debug Integrated On-Chip

PIC18-Q40 Block Diagram

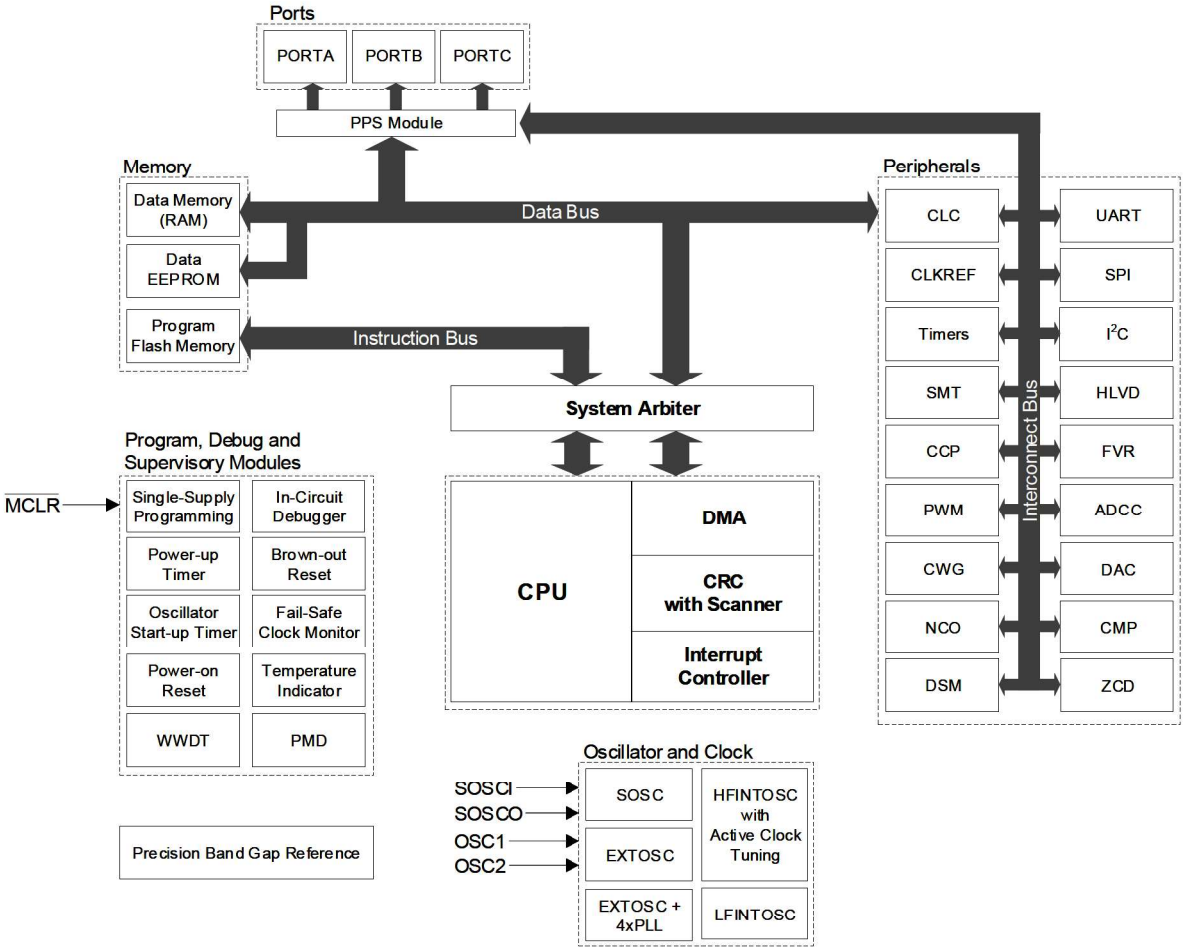

Table of Contents

Introduction....1

PIC18-Q40 Family Types....1

Features....2

- Memory....2
- Operating Characteristics....3
- Power-Saving Functionality....3
- Digital Peripherals....3
- Analog Peripherals....4
- Clocking Structure....5
- Programming/Debug Features....5
- PIC18-Q40 Block Diagram....6

1. Packages....17
2. Pin Diagrams....18
3. Pin Allocation Tables....19
4. Guidelines for Getting Started with PIC18-Q40 Microcontrollers....23
   - 4.1. Basic Connection Requirements....23
   - 4.2. Power Supply Pins....23
   - 4.3. Master Clear ($\overline{MCLR}$) Pin....24
   - 4.4. In-Circuit Serial Programming™ (ICSP™) Pins....24
   - 4.5. External Oscillator Pins....25
   - 4.6. Unused I/Os....27
5. Register and Bit Naming Conventions....28
   - 5.1. Register Names....28
   - 5.2. Bit Names....28
   - 5.3. Register and Bit Naming Exceptions....29
6. Register Legend....30
7. PIC18 CPU....31
   - 7.1. System Arbitration....31
   - 7.2. Memory Access Scheme....33
   - 7.3. 8x8 Hardware Multiplier....33
   - 7.4. PIC18 Instruction Cycle....36
   - 7.5. STATUS Register....38
   - 7.6. Call Shadow Register....38
   - 7.7. Register Definitions: System Arbiter....39
   - 7.8. Register Summary - System Arbiter Control....48
8. Device Configuration....49
   - 8.1. Configuration Settings....49
   - 8.2. Code Protection....49
   - 8.3. User ID....49

8.4. Device ID and Revision ID 49
8.5. Register Definitions: Configuration Settings 49
8.6. Register Summary - Configuration Settings 59
8.7. Register Definitions: Device ID and Revision ID 59
8.8. Register Summary - DEVID/REVID 62

9. Memory Organization 63
9.1. Program Memory Organization 63
9.2. Device Information Area 69
9.3. Device Configuration Information 71
9.4. Data Memory Organization 71
9.5. Data Addressing Modes 75
9.6. Data Memory and the Extended Instruction Set 77
9.7. Register Definitions: Memory Organization 80
9.8. Register Summary - Memory Organization 93

10. NVM - Nonvolatile Memory Module 94
10.1. Operations 94
10.2. Unlock Sequence 95
10.3. Program Flash Memory (PFM) 95
10.4. Data Flash Memory (DFM) 107
10.5. Register Definitions: NVM 110
10.6. Register Summary - NVM 118

11. VIC - Vectored Interrupt Controller Module 119
11.1. Overview 119
11.2. Interrupt Control and Status Registers 119
11.3. Interrupt Vector Table 119
11.4. Interrupt Priority 122
11.5. Interrupt Operation 124
11.6. Context Saving 127
11.7. Returning from Interrupt Service Routine (ISR) 128
11.8. Interrupt Latency 128
11.9. Interrupt Setup Procedure 131
11.10. External Interrupt Pins 133
11.11. Wake-up from Sleep 133
11.12. Interrupt Compatibility 133
11.13. Register Definitions: Interrupt Control 134
11.14. Register Summary - Interrupts 179

12. OSC - Oscillator Module (With Fail-Safe Clock Monitor) 181
12.1. Clock Source Types 182
12.2. Clock Switching 189
12.3. Fail-Safe Clock Monitor (FSCM) 193
12.4. Active Clock Tuning (ACT) 195
12.5. Register Definitions: Oscillator Module 197
12.6. Register Summary - Oscillator Module 207

13. CRC - Cyclic Redundancy Check Module with Memory Scanner 208

13.1. Module Overview....208
13.2. Polynomial Implementation....208
13.3. Data Sources....209
13.4. CRC Check Value....210
13.5. CRC Interrupt....211
13.6. Configuring the CRC Module....211
13.7. Scanner Module Overview....212
13.8. Scanning Modes....212
13.9. Configuring the Scanner....212
13.10. Scanner Interrupt....213
13.11. Peripheral Module Disable....213
13.12. Register Definitions: CRC and Scanner Control....213
13.13. Register Summary - CRC....226

14. Resets....227
14.1. Power-on Reset (POR)....227
14.2. Brown-out Reset (BOR)....228
14.3. Low-Power Brown-out Reset (LPBOR)....229
14.4. $\overline{\text{MCLR}}$ Reset....230
14.5. Windowed Watchdog Timer (WWDT) Reset....231
14.6. RESET Instruction....231
14.7. Stack Overflow/Underflow Reset....231
14.8. Programming Mode Exit....231
14.9. Power-up Timer (PWRT)....231
14.10. Start-up Sequence....231
14.11. Determining the Cause of a Reset....232
14.12. Power Control (PCON0/PCON1) Registers....233
14.13. Register Definitions: Power Control....234
14.14. Register Summary - BOR Control and Power Control....239

15. WWDT - Windowed Watchdog Timer....240
15.1. Independent Clock Source....241
15.2. WWDT Operating Modes....242
15.3. Time-out Period....242
15.4. Watchdog Window....242
15.5. Clearing the Watchdog Timer....243
15.6. Operation During Sleep....243
15.7. Register Definitions: Windowed Watchdog Timer Control....244
15.8. Register Summary: WDT Control....250

16. DMA - Direct Memory Access....251
16.1. DMA Registers....252
16.2. DMA Organization....253
16.3. DMA Interface....253
16.4. Disable DMA Message Transfer Upon Completion....260
16.5. Types of Hardware Triggers....260
16.6. Types of Data Transfers....260
16.7. DMA Interrupts....261

16.8. DMA Setup and Operation 262
16.9. Reset 271
16.10. Power-Saving Mode Operation 271
16.11. Example Setup Code 271
16.12. Register Overlay 272
16.13. Register Definitions: DMA 272
16.14. Register Summary - DMA 288

17. Power-Saving Modes 289
17.1. Doze Mode 289
17.2. Sleep Mode 290
17.3. Idle Mode 293
17.4. Peripheral Operation in Power-Saving Modes 293
17.5. Register Definitions: Power-Savings Control 293
17.6. Register Summary - Power-Savings Control 296

18. PMD - Peripheral Module Disable 297
18.1. Overview 297
18.2. Disabling a Module 297
18.3. Enabling a Module 297
18.4. Register Definitions: Peripheral Module Disable 297
18.5. Register Summary - PMD 304

19. I/O Ports 305
19.1. Overview 305
19.2. PORTx - Data Register 306
19.3. LATx - Output Latch 306
19.4. TRISx - Direction Control 307
19.5. ANSELx - Analog Control 307
19.6. WPUx - Weak Pull-Up Control 307
19.7. INLVLx - Input Threshold Control 307
19.8. SLRCONx - Slew Rate Control 307
19.9. ODCONx - Open-Drain Control 308
19.10. Edge Selectable Interrupt-on-Change 308
19.11. I^2C Pad Control 308
19.12. I/O Priorities 308
19.13. $\overline{MCLR}/V_{PP}$/RA3 Pin 309
19.14. Register Definitions: Port Control 309
19.15. Register Summary - IO Ports 319

20. IOC - Interrupt-on-Change 320
20.1. Overview 320
20.2. Enabling the Module 320
20.3. Individual Pin Configuration 321
20.4. Interrupt Flags 321
20.5. Clearing Interrupt Flags 321
20.6. Operation in Sleep 321
20.7. Register Definitions: Interrupt-on-Change Control 321
20.8. Register Summary: Interrupt-on-Change Control 325

21. PPS - Peripheral Pin Select Module 326
21.1. Overview 326
21.2. PPS Inputs 326
21.3. PPS Outputs 328
21.4. Bidirectional Pins 329
21.5. PPS Lock 330
21.6. Operation During Sleep 331
21.7. Effects of a Reset 331
21.8. Register Definitions: Peripheral Pin Select (PPS) 331
21.9. Register Summary: Peripheral Pin Select Module 335

22. CLC - Configurable Logic Cell 337
22.1. CLC Setup 338
22.2. CLC Interrupts 341
22.3. Effects of a Reset 342
22.4. Output Mirror Copies 342
22.5. Operation During Sleep 342
22.6. CLC Setup Steps 342
22.7. Register Overlay 343
22.8. Register Definitions: Configurable Logic Cell 343
22.9. Register Summary - CLC Control 356

23. CLKREF - Reference Clock Output Module 357
23.1. Clock Source 357
23.2. Programmable Clock Divider 358
23.3. Selectable Duty Cycle 358
23.4. Operation in Sleep Mode 358
23.5. Register Definitions: Reference Clock 358
23.6. Register Summary: Reference CLK 361

24. TMR0 - Timer0 Module 362
24.1. Timer0 Operation 362
24.2. Clock Selection 363
24.3. Timer0 Output and Interrupt 364
24.4. Operation During Sleep 364
24.5. Register Definitions: Timer0 Control 364
24.6. Register Summary: Timer0 369

25. TMR1 - Timer1 Module with Gate Control 370
25.1. Timer1 Operation 371
25.2. Clock Source Selection 372
25.3. Timer1 Prescaler 373
25.4. Secondary Oscillator 373
25.5. Timer1 Operation in Asynchronous Counter Mode 373
25.6. Timer1 16-Bit Read/Write Mode 373
25.7. Timer1 Gate 374
25.8. Timer1 Interrupt 377
25.9. Timer1 Operation During Sleep 378

25.10. CCP Capture/Compare Time Base....378
25.11. CCP Special Event Trigger....378
25.12. Peripheral Module Disable....378
25.13. Register Definitions: Timer1 Control....378
25.14. Register Summary Timer 1....385

26. TMR2 - Timer2 Module....386
26.1. Timer2 Operation....387
26.2. Timer2 Output....387
26.3. External Reset Sources....388
26.4. Timer2 Interrupt....388
26.5. PSYNC bit....388
26.6. CSYNC bit....388
26.7. Operating Modes....389
26.8. Operation Examples....390
26.9. Timer2 Operation During Sleep....400
26.10. Register Definitions: Timer2 Control....400
26.11. Register Summary - Timer2....408

27. SMT - Signal Measurement Timer....409
27.1. SMT Operation....409
27.2. Register Definitions: SMT Control....421
27.3. Register Summary - SMT Control....432

28. CCP - Capture/Compare/PWM Module....433
28.1. CCP Module Configuration....433
28.2. Capture Mode....433
28.3. Compare Mode....435
28.4. PWM Overview....436
28.5. Register Definitions: CCP Control....440
28.6. Register Summary - CCP Control....445

29. Capture, Compare, and PWM Timers Selection....446
29.1. Register Definitions: Capture, Compare, and PWM Timer Selection....446
29.2. Register Summary - Capture, Compare, and PWM Timers Selection....448

30. PWM - Pulse-Width Modulator with Compare....449
30.1. Output Slices....449
30.2. Period Timer....456
30.3. Clock Sources....457
30.4. External Period Resets....457
30.5. Buffered Period and Parameter Registers....458
30.6. Synchronizing Multiple PWMs....458
30.7. Interrupts....458
30.8. Operation During Sleep....459
30.9. Register Definitions: PWM Control....459
30.10. Register Summary - PWM....474

31. CWG - Complementary Waveform Generator Module....475

31.1. Fundamental Operation....475
31.2. Operating Modes....475
31.3. Clock Source....486
31.4. Selectable Input Sources....487
31.5. Output Control....487
31.6. Dead-Band Control....487
31.7. Rising Edge and Reverse Dead-Band....487
31.8. Falling Edge and Forward Dead Band....488
31.9. Dead-Band Jitter....488
31.10. Auto-Shutdown....489
31.11. Auto-Shutdown Restart....490
31.12. Operation During Sleep....491
31.13. Configuring the CWG....491
31.14. Register Definitions: CWG Control....492
31.15. Register Summary - CWG....502

32. NCO - Numerically Controlled Oscillator Module....503
32.1. NCO Operation....504
32.2. Fixed Duty Cycle Mode....505
32.3. Pulse Frequency Mode....505
32.4. Output Polarity Control....506
32.5. Interrupts....506
32.6. Effects of a Reset....506
32.7. Operation in Sleep....506
32.8. Register Definitions: NCO....506
32.9. Register Summary - NCO....511

33. DSM - Data Signal Modulator Module....512
33.1. DSM Operation....513
33.2. Carrier Synchronization....514
33.3. Carrier Source Polarity Select....515
33.4. Programmable Modulator Data....515
33.5. Modulated Output Polarity....515
33.6. Operation in Sleep Mode....516
33.7. Effects of a Reset....516
33.8. Peripheral Module Disable....516
33.9. Register Definitions: Modulation Control....516
33.10. Register Summary - DSM....522

34. UART - Universal Asynchronous Receiver Transmitter with Protocol Support....523
34.1. UART I/O Pin Configuration....524
34.2. UART Asynchronous Modes....525
34.3. DMX Mode (Full-featured UARTs only)....531
34.4. LIN Modes (Full-featured UARTs only)....533
34.5. DALI Mode (Full-featured UARTs only)....535
34.6. General Purpose Manchester (Full-featured UARTs only)....538
34.7. Polarity....539
34.8. Stop Bits....539

34.9. Operation After FIFO Overflow....540
34.10. Receive and Transmit Buffers....540
34.11. Flow Control....540
34.12. Checksum (Full-featured UARTs only)....542
34.13. Collision Detection (Full-featured UARTs only)....543
34.14. RX/TX Activity Time-out....543
34.15. Clock Accuracy With Asynchronous Operation....543
34.16. UART Baud Rate Generator....544
34.17. Transmitting a Break....547
34.18. Receiving a Break....548
34.19. UART Operation During Sleep....548
34.20. Register Definitions: UART....548
34.21. Register Summary - UART....567

35. SPI - Serial Peripheral Interface Module....569
35.1. SPI Controls....571
35.2. SPI Operation....572
35.3. Master Mode....575
35.4. Slave Mode....582
35.5. SPI Operation In Sleep Mode....586
35.6. SPI Interrupts....586
35.7. Register Definitions: Serial Peripheral Interface....588
35.8. Register Summary - SPI Control....601

36. I^2C - Inter-Integrated Circuit Module....602
36.1. I^2C Features....602
36.2. I^2C Terminology....603
36.3. I^2C Module Overview....604
36.4. I^2C Operation....620
36.5. Register Definitions: I^2C Control....663
36.6. Register Summary - I2C....687

37. HLVD - High/Low-Voltage Detect....688
37.1. Operation....688
37.2. Setup....688
37.3. Current Consumption....689
37.4. HLVD Start-up Time....689
37.5. Applications....691
37.6. Operation During Sleep....692
37.7. Operation During Idle and Doze Modes....692
37.8. Effects of a Reset....692
37.9. Register Definitions: HLVD Control....692
37.10. Register Summary - HLVD....695

38. FVR - Fixed Voltage Reference....696
38.1. Independent Gain Amplifiers....696
38.2. FVR Stabilization Period....696
38.3. Register Definitions: FVR....696
38.4. Register Summary - FVR....699

39. Temperature Indicator Module 700
39.1. Module Operation 700
39.2. Temperature Calculation 701
39.3. ADC Acquisition Time 702
39.4. Register Definitions: Temperature Indicator 702
39.5. Register Summary - Temperature Indicator 704

40. ADCC - Analog-to-Digital Converter with Computation Module 705
40.1. ADC Configuration 706
40.2. ADC Operation 710
40.3. ADC Acquisition Requirements 712
40.4. ADC Charge Pump 714
40.5. Computation Operation 715
40.6. Capacitive Voltage Divider (CVD) Features 719
40.7. Register Definitions: ADC Control 723
40.8. Register Summary - ADC 748

41. DAC - Digital-to-Analog Converter Module 749
41.1. Output Voltage Selection 750
41.2. Ratiometric Output Level 751
41.3. Operation During Sleep 751
41.4. Effects of a Reset 751
41.5. Register Definitions: DAC Control 751
41.6. Register Summary - DAC 756

42. CMP - Comparator Module 757
42.1. Comparator Overview 757
42.2. Comparator Control 758
42.3. Comparator Output Synchronization 759
42.4. Comparator Hysteresis 759
42.5. Comparator Interrupt 759
42.6. Comparator Positive Input Selection 760
42.7. Comparator Negative Input Selection 760
42.8. Comparator Response Time 760
42.9. Analog Input Connection Considerations 760
42.10. Operation in Sleep Mode 761
42.11. ADC Auto-Trigger Source 761
42.12. Register Definitions: Comparator Control 761
42.13. Register Summary - Comparator 767

43. ZCD - Zero-Cross Detection Module 768
43.1. External Resistor Selection 769
43.2. ZCD Logic Output 769
43.3. ZCD Logic Polarity 769
43.4. ZCD Interrupts 769
43.5. Correction for Z_{CPINV} Offset 770
43.6. Handling V_{PEAK} Variations 772
43.7. Operation During Sleep 772

43.8. Effects of a Reset 772
43.9. Disabling the ZCD Module 772
43.10. Register Summary: ZCD 773
43.11. Register Definitions: ZCD Control 773

44. Instruction Set Summary 775
44.1. Standard Instruction Set 775
44.2. Extended Instruction Set 849

45. ICSP™ - In-Circuit Serial Programming™ 860
45.1. High-Voltage Programming Entry Mode 860
45.2. Low-Voltage Programming Entry Mode 860
45.3. Common Programming Interfaces 860

46. Register Summary 863

47. Electrical Specifications 875
47.1. Absolute Maximum Ratings(†) 875
47.2. Standard Operating Conditions 876
47.3. DC Characteristics 877
47.4. AC Characteristics 883

48. DC and AC Characteristics Graphs and Tables 905

49. Packaging Information 906
49.1. Package Details 908

50. Appendix A: Revision History 924

The Microchip Website 925

Product Change Notification Service 925

Customer Support 925

Product Identification System 926

Microchip Devices Code Protection Feature 926

Legal Notice 927

Trademarks 927

Quality Management System 928

Worldwide Sales and Service 929

1. Packages

Table 1-1. Packages

Device	14-Pin TSSOP	14-Pin SOIC	20-Pin PDIP	20-Pin SOIC	20-Pin SSOP	20-Pin VQFN
PIC18F04Q40	•	•				
PIC18F05Q40	•	•				
PIC18F06Q40	•	•				
PIC18F14Q40			•	•	•	•
PIC18F15Q40			•	•	•	•
PIC18F16Q40			•	•	•	•

2. Pin Diagrams

Figure 2-1.
14-Pin SOIC

14-Pin TSSOP

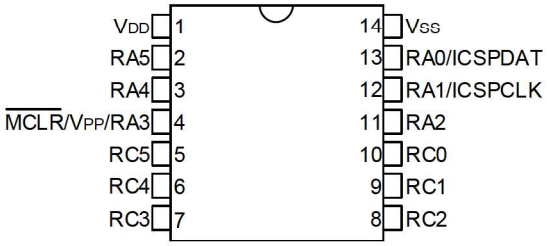

Figure 2-2.
20-Pin PDIP

20-Pin SOIC

20-Pin SSOP

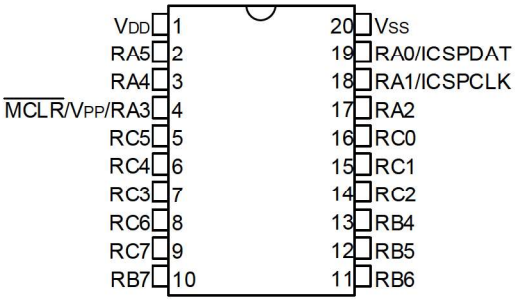

Figure 2-3.
20-Pin VQFN

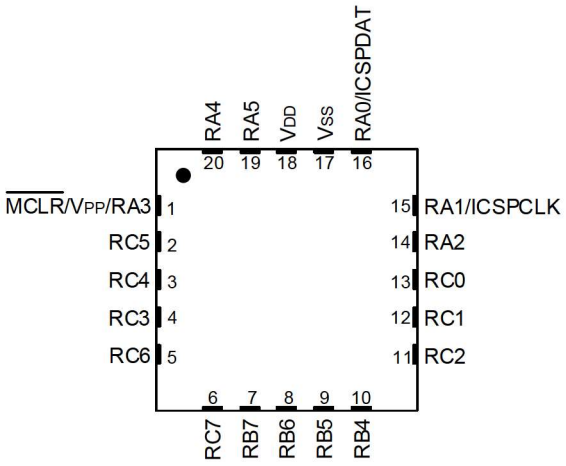

Note: It is recommended that the exposed bottom pad be connected to V_{SS}; however, it must not be the only V_{SS} connection to the device.

3. Pin Allocation Tables

Table 3-1. 14-Pin Allocation Table

I/O	14-Pin SOIC/ TSSOP	A/D	Reference	Comparator	ZCD	Timers/SMT	16-Bit PWM/CCP	CWG	CLC	SPI	I2C	UART	DSM	IOC	Interrupts	Basic
RA0	13	ANA0	DAC1OUT1	C1IN0+	—	—	—	—	—	SS2(1)	—	—	—	IOCA0	—	ICDDAT ICSPDAT
RA1	12	ANA1	VREF+ (ADC) VREF+ (DAC1) VREF+ (DAC2)	C1IN0- C2IN0-	—	—	—	—	—	—	—	—	MDSRC(1)	IOCA1	—	ICDCLK ICSPCLK
RA2	11	ANA2	VREF- (ADC) VREF- (DAC1) VREF- (DAC2) DAC1OUT2	—	ZCDIN	T0CKI(1)	—	CWGIN(1)	—	—	—	—	—	IOCA2	INT0(1)	—
RA3	4	—	—	—	—	—	—	—	—	—	—	—	—	IOCA3	—	MCLR VPP
RA4	3	ANA4	—	—	—	T1G(1)	—	—	CLCIN3(1)	—	—	RX3(1)	—	IOCA4	INT1(1)	CLKOUT SOSCO OSC2
RA5	2	ANA5	—	—	—	T1CKI(1) T2IN(1) SMT1WIN(1)	PWM1ERS(1)	—	—	—	—	CTS3(1)	—	IOCA5	INT2(1)	CLKIN SOSCI OSC1
RC0	10	ANC0	—	C2IN0+	—	SMT1SIG(1)	—	—	—	SCK1(1)	SCL1(3,4)	—	—	IOCC0	—	—
RC1	9	ANC1	—	C1IN1- C2IN1-	—	T4IN(1)	PWM2ERS(1)	—	CLCIN2(1)	SDI1(1)	SDA1(3,4)	RX2(1)	—	IOCC1	—	—
RC2	8	ANC2 ADACT(1)	—	C1IN2- C2IN2-	—	—	PWM3ERS(1)	—	—	—	—	CTS2(1)	MDCARL(1)	IOCC2	—	—
RC3	7	ANC3	—	C1IN3- C2IN3-	—	—	PWMIN2(1)	—	CLCIN0(1)	SS1(1)	—	—	—	IOCC3	—	—
RC4	6	ANC4	—	—	—	T3G(1)	—	—	CLCIN1(1)	SCK2(1)	—	CTS1(1)	—	IOCC4	—	—
RC5	5	ANC5	—	—	—	T3CKI(1)	CCP1IN(1) PWMIN1(1)	—	—	SDI2(1)		RX1(1)	MDCARH(1)	IOCC5	—	—
VDD	1	—	—	—	—	—	—	—	—	—	—	—	—	—	—	VDD
VSS	14	—	—	—	—	—	—	—	—	—	—	—	—	—	—	VSS

.....continued

I/O	14-Pin SOIC/ TSSOP	A/D	Reference	Comparator	ZCD	Timers/SMT	16-Bit PWM/CCP	CWG	CLC	SPI	I^2C	UART	DSM	IOC	Interrupts	Basic
OUT(2)	—	ADCGRDA ADCGRDB	—	CM1OUT CM2OUT	—	TMR0	PWM11 PWM12 PWM21 PWM22 PWM31 PWM32 CCP1	CWG1A CWG1B CWG1C CWG1D	CLC1OUT CLC2OUT CLC3OUT CLC4OUT	SS1 SCK1 SD01 SS2 SCK2 SDO2	SDA1 SCL1	DTR1 RTS1 TX1 DTR2 RTS2 TX2 DTR3 RTS3 TX3	DSM1	—	—	—

Notes:

1. This is a PPS re-mappable input signal. The input function may be moved from the default location shown to one of several other PORTx pins.
2. All digital output signals shown in these rows are PPS re-mappable. These signals may be mapped to output onto one of several PORTx pin options.
3. This is a bidirectional signal. For normal module operation, the firmware should map this signal to the same pin in both the PPS input and PPS output registers.
4. These pins are configured for I^2C logic levels; The SCLx/SDAx signals may be assigned to any of these pins. PPS assignments to the other pins (e.g., RB1) will operate, but input logic levels will be standard TTL/ST as selected by the INLVL register, instead of the I^2C specific or SMBus input buffer thresholds.
5. A 0.1 uF bypass capacitor to V_{SS} is required on the V_{DD} pin.

Table 3-2. 20-Pin Allocation Table

I/O	20-Pin PDIP/ SOIC/ TSSOP	20-Pin VQFN	A/D	Reference	Comparator	ZCD	Timers/SMT	16-Bit PWM/CCP	CWG	CLC	SPI	I^2C	UART	DSM	IOC	Interrupts	Basic
RA0	19	16	ANA0	DAC1OUT1	C1IN0+	—	—	—	—	—	—	—	—	—	IOCA0	—	ICDDAT ICSPDAT
RA1	18	15	ANA1	VREF+ (ADC) VREF+ (DAC1) VREF+ (DAC2)	C1IN0- C2IN0-	—	—	—	—	—	SS2(1)	—	—	MDSRC(1)	IOCA1	—	ICDCLK ICSPCLK
RA2	17	14	ANA2	VREF- (ADC) VREF- (DAC1) VREF- (DAC2) DAC1OUT2	—	ZCDIN	—	—	CWGIN(1)	CLCIN0(1)	—	—	—	—	IOCA2	—	—
RA3	4	1	—	—	—	—	—	—	—	—	—	—	—	—	IOCA3	—	MCLR VPP
RA4	3	20	ANA4	—	—	—	T1G(1) SMT1SIG(1)	—	—	—	—	—	—	—	IOCA4	—	CLKOUT SOSCO OSC2
RA5	2	19	ANA5	—	—	—	T2IN(1) SMT1WIN(1)	PWM1ERS(1)	—	—	—	—	—	—	IOCA5	—	CLKIN SOSCI OSC1
RB4	13	10	ANB4	—	—	—	—	—	—	CLCIN2(1)	SDI1(1)	SDA1(3,4)	—	—	IOCB4	—	—
RB5	12	9	ANB5	—	—	—	—	—	—	CLCIN3(1)	SDI2(1)	—	RX1(1)	—	IOCB5	—	—
RB6	11	8	ANB6	—	—	—	—	—	—	—	SCK1(1)	SCL1(3,4)	—	—	IOCB6	—	—
RB7	10	7	ANB7	—	—	—	—	—	—	—	SCK2(1)	—	CTS1(1)	—	IOCB7	—	—
RC0	16	13	ANC0	—	C2IN0+	—	—	—	—	—	—	—	—	—	IOCC0	INT0(1)	—
RC1	15	12	ANC1	—	C1IN1- C2IN1-	—	T4IN(1)	PWM2ERS(1)	—	—	—	—	RX2(1)	—	IOCC1	INT1(1)	—
RC2	14	11	ANC2 ADACT(1)	—	C1IN2- C2IN2-	—	—	PWM3ERS(1)	—	—	—	—	CTS2(1)	MDCARL(1)	IOCC2	INT2(1)	—
RC3	7	4	ANC3	—	C1IN3- C2IN3-	—	—	PWMIN2(1)	—	CLCIN1(1)	—	—	RX3(1)	—	IOCC3	—	—
RC4	6	3	ANC4	—	—	—	T3G(1)	—	—	—	—	—	—	—	IOCC4	—	—
RC5	5	2	ANC5	—	—	—	T3CKI(1) T0CKI(1)	CCP1IN(1) PWMIN1(1)	—	—	—	—	CTS3(1)	MDCARH(1)	IOCC5	—	—
RC6	8	5	ANC6	—	—	—	T1CKI(1)	—	—	—	SS1(1)	—	—	—	IOCC6	—	—
RC7	9	6	ANC7	—	—	—	—	—	—	—	—	—	—	—	IOCC7	—	—
VDD	1	18	—	—	—	—	—	—	—	—	—	—	—	—	—	—	VDD

.....continued

I/O	20-Pin PDIP/ SOIC/ TSSOP	20-Pin VQFN	A/D	Reference	Comparator	ZCD	Timers/SMT	16-Bit PWM/CCP	CWG	CLC	SPI	I^2C	UART	DSM	IOC	Interrupts	Basic
VSS	20	17	—	—	—	—	—	—	—	—	—	—	—	—	—	—	VSS
OUT(2)	—	—	ADCGRDA ADCGRDB	—	CM1OUT CM2OUT	—	TMR0	PWM11 PWM12 PWM21 PWM22 PWM31 PWM32 CCF1	CWG1A CWG1B CWG1C CWG1D	CLC1OUT CLC2OUT CLC3OUT CLC4OUT	SS1 SCK1 SD01 SS2 SCK2 SDO2	SDA1 SCL1	DTR1 RTS1 TX1 DTR2 RTS2 TX2 DTR3 RTS3 TX3	DSM1	—	—	—

Notes:

1. This is a PPS re-mappable input signal. The input function may be moved from the default location shown to one of several other PORTx pins.
2. All digital output signals shown in these rows are PPS re-mappable. These signals may be mapped to output onto one of several PORTx pin options.
3. This is a bidirectional signal. For normal module operation, the firmware should map this signal to the same pin in both the PPS input and PPS output registers.
4. These pins are configured for I^2C logic levels; The SCLx/SDAx signals may be assigned to any of these pins. PPS assignments to the other pins (e.g., RB1) will operate, but input logic levels will be standard TTL/ST as selected by the INLVL register, instead of the I^2C specific or SMBus input buffer thresholds.
5. A 0.1 uF bypass capacitor to V_{SS} is required on the V_{DD} pin.

4. Guidelines for Getting Started with PIC18-Q40 Microcontrollers

4.1 Basic Connection Requirements

Getting started with the PIC18-Q40 family of 8-bit microcontrollers requires attention to a minimal set of device pin connections before proceeding with development.

The following pins must always be connected:

- All V_{DD} and V_{SS} pins (see Power Supply Pins)
- $\overline{MCLR}$ pin (see Master Clear ($\overline{MCLR}$) Pin)

These pins must also be connected if they are being used in the end application:

- ICSPCLK/ICSPDAT pins used for In-Circuit Serial Programming™ (ICSP™) and debugging purposes (see In-Circuit Serial Programming (ICSP) Pins)
- OSCI and OSCO pins when an external oscillator source is used (see External Oscillator Pins)

Additionally, the following pins may be required:

- $V_{REF}+/V_{REF}-$ pins are used when external voltage reference for analog modules is implemented

The minimum mandatory connections are shown in the figure below.

Figure 4-1. Recommended Minimum Connections

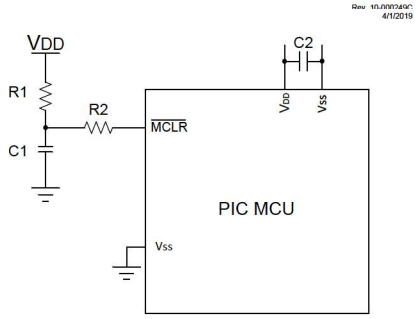

Key:
C1: 0.1 µF, 20V ceramic (recommended)
R1: 10 kΩ (recommended)
R2: 100Ω to 470Ω (recommended)
C2: 0.1 µF, 20V ceramic (required)

4.2 Power Supply Pins

4.2.1 Decoupling Capacitors

The use of decoupling capacitors on every pair of power supply pins (V_{DD} and V_{SS}) is required.

Consider the following criteria when using decoupling capacitors:

- Value and type of capacitor: A 0.1 µF (100 nF), 10-20V capacitor is recommended. The capacitor should be a low-ESR device, with a resonance frequency in the range of 200 MHz and higher. Ceramic capacitors are recommended.
- Placement on the printed circuit board: The decoupling capacitors should be placed as close to the pins as possible. It is recommended to place the capacitors on the same side of the board as the device. If space is constricted, the capacitor can be placed on another layer on the PCB using a via; however, ensure that the trace length from the pin to the capacitor is no greater than 0.25 inch (6 mm).

- Handling high-frequency noise: If the board is experiencing high-frequency noise (upward of tens of MHz), add a second ceramic type capacitor in parallel to the above described decoupling capacitor. The value of the second capacitor can be in the range of 0.01 µF to 0.001 µF. Place this second capacitor next to each primary decoupling capacitor. In high-speed circuit designs, consider implementing a decade pair of capacitances as close to the power and ground pins as possible (e.g., 0.1 µF in parallel with 0.001 µF).
- Maximizing performance: On the board layout from the power supply circuit, run the power and return traces to the decoupling capacitors first, and then to the device pins. This ensures that the decoupling capacitors are first in the power chain. Equally important is to keep the trace length between the capacitor and the power pins to a minimum, thereby reducing PCB trace inductance.

4.2.2 Tank Capacitors

On boards with power traces running longer than six inches in length, it is suggested to use a tank capacitor for integrated circuits, including microcontrollers, to supply a local power source. The value of the tank capacitor should be determined based on the trace resistance that connects the power supply source to the device, and the maximum current drawn by the device in the application. In other words, select the tank capacitor that meets the acceptable voltage sag at the device. Typical values range from 4.7 µF to 47 µF.

4.3 Master Clear ($\overline{MCLR}$) Pin

The $\overline{MCLR}$ pin provides two specific device functions: Device Reset, and Device Programming and Debugging. If programming and debugging are not required in the end application, a direct connection to V_{DD} may be all that is required. The addition of other components, to help increase the application's resistance to spurious Resets from voltage sags, may be beneficial. A typical configuration is shown in Figure 4-1. Other circuit designs may be implemented, depending on the application's requirements.

During programming and debugging, the resistance and capacitance that can be added to the pin must be considered. Device programmers and debuggers drive the $\overline{MCLR}$ pin. Consequently, specific voltage levels (V_{IH} and V_{IL}) and fast signal transitions must not be adversely affected. Therefore, specific values of R1 and C1 will need to be adjusted based on the application and PCB requirements. For example, it is recommended that the capacitor, C1, be isolated from the $\overline{MCLR}$ pin during programming and debugging operations by using a jumper (Figure 4-2). The jumper is replaced for normal run-time operations.

Any components associated with the $\overline{MCLR}$ pin should be placed within 0.25 inch (6 mm) of the pin.

Figure 4-2. Example of $\overline{MCLR}$ Pin Connections

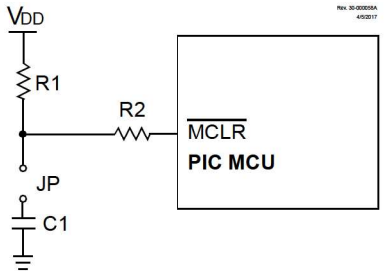

Notes:

1. R1 ≤ 10 kΩ is recommended. A suggested starting value is 10 kΩ. Ensure that the $\overline{MCLR}$ pin V_{IH} and V_{IL} specifications are met.
2. R2 ≤ 470Ω will limit any current flowing into $\overline{MCLR}$ from the extended capacitor, C1, in the event of $\overline{MCLR}$ pin breakdown, due to Electrostatic Discharge (ESD) or Electrical Overstress (EOS). Ensure that the $\overline{MCLR}$ pin V_{IH} and V_{IL} specifications are met.

4.4 In-Circuit Serial Programming™ (ICSP™) Pins

The ICSPCLK and ICSPDAT pins are used for ICSP and debugging purposes. It is recommended to keep the trace length between the ICSP connector and the ICSP pins on the device as short as possible. If the ICSP connector is expected to experience an ESD event, a series resistor is recommended, with the value in the range of a few tens of ohms, not to exceed 100Ω.

Pull-up resistors, series diodes and capacitors on the ICSPCLK and ICSPDAT pins are not recommended as they can interfere with the programmer/debugger communications to the device. If such discrete components are an application requirement, they should be removed from the circuit during programming and debugging. Alternatively, refer to the AC/DC characteristics and timing requirements information in the respective device Flash programming specification for information on capacitive loading limits, and pin input voltage high (V_{IH}) and input low (V_{IL}) requirements.

For device emulation, ensure that the “Communication Channel Select” (i.e., ICSPCLK/ICSPDAT pins), programmed into the device, matches the physical connections for the ICSP to the Microchip debugger/emulator tool.

4.5 External Oscillator Pins

Many microcontrollers have options for at least two oscillators: a high-frequency primary oscillator and a low-frequency secondary oscillator.

The oscillator circuit should be placed on the same side of the board as the device. Place the oscillator circuit close to the respective oscillator pins with no more than 0.5 inch (12 mm) between the circuit components and the pins. The load capacitors should be placed next to the oscillator itself, on the same side of the board.

Use a grounded copper pour around the oscillator circuit to isolate it from surrounding circuits. The grounded copper pour should be routed directly to the MCU ground. Do not run any signal traces or power traces inside the ground pour. Also, if using a two-sided board, avoid any traces on the other side of the board where the crystal is placed.

Layout suggestions are shown in the following figure. In-line packages may be handled with a single-sided layout that completely encompasses the oscillator pins. With fine-pitch packages, it is not always possible to completely surround the pins and components. A suitable solution is to tie the broken guard sections to a mirrored ground layer. In all cases, the guard trace(s) must be returned to ground.

Figure 4-3. Suggested Placement of the Oscillator Circuit

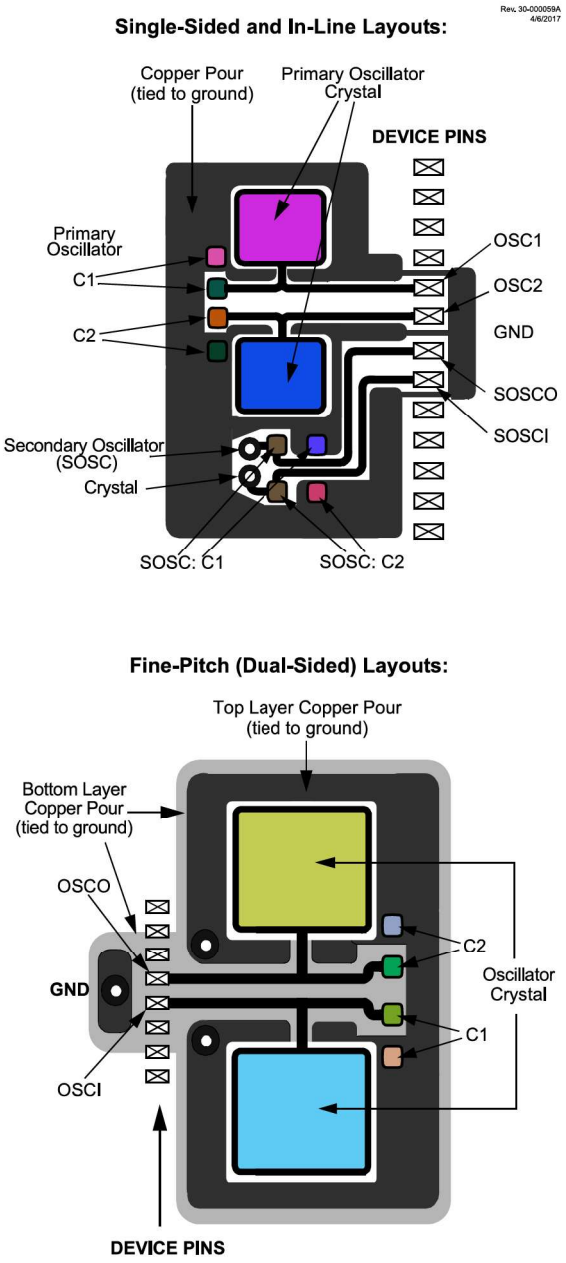

In planning the application's routing and I/O assignments, ensure that adjacent PORT pins, and other signals in close proximity to the oscillator, are benign (i.e., free of high frequencies, short rise and fall times, and other similar noise).

For additional information and design guidance on oscillator circuits, refer to these Microchip Application Notes, available at the corporate website (www.microchip.com):

- AN826, *"Crystal Oscillator Basics and Crystal Selection for rfPIC™ and PICmicro® Devices"*
- AN849, *"Basic PICmicro® Oscillator Design"*
- AN943, *"Practical PICmicro® Oscillator Analysis and Design"*
- AN949, *"Making Your Oscillator Work"*

4.6 Unused I/Os

Unused I/O pins should be configured as outputs and driven to a logic low state. Alternatively, connect a 1 kΩ to 10 kΩ resistor to V_{SS} on unused pins to drive the output to logic low.

5. Register and Bit Naming Conventions

5.1 Register Names

When there are multiple instances of the same peripheral in a device, the Peripheral Control registers will be depicted as the concatenation of a peripheral identifier, peripheral instance, and control identifier. The control registers section will show just one instance of all the register names with an 'x' in the place of the peripheral instance number. This naming convention may also be applied to peripherals when there is only one instance of that peripheral in the device to maintain compatibility with other devices in the family that contain more than one.

5.2 Bit Names

There are two variants for bit names:

- Short name: Bit function abbreviation
- Long name: Peripheral abbreviation + short name

5.2.1 Short Bit Names

Short bit names are an abbreviation for the bit function. For example, some peripherals are enabled with the EN bit. The bit names shown in the registers are the short name variant.

Short bit names are useful when accessing bits in C programs. The general format for accessing bits by the short name is RegisterNamebits.ShortName. For example, the enable bit, ON, in the ADCON0 register can be set in C programs with the instruction `ADCON0bits.ON = 1`.

Short names are generally not useful in assembly programs because the same name may be used by different peripherals in different bit positions. When this occurs, during the include file generation, all instances of that short bit name are appended with an underscore plus the name of the register in which the bit resides to avoid naming contentions.

5.2.2 Long Bit Names

Long bit names are constructed by adding a peripheral abbreviation prefix to the short name. The prefix is unique to the peripheral, thereby making every long bit name unique. The long bit name for the ADC enable bit is the ADC prefix, AD, appended with the enable bit short name, ON, resulting in the unique bit name ADON.

Long bit names are useful in both C and assembly programs. For example, in C the ADCON0 enable bit can be set with the `ADON = 1` instruction. In assembly, this bit can be set with the `BSF ADCON0,ADON` instruction.

5.2.3 Bit Fields

Bit fields are two or more adjacent bits in the same register. Bit fields adhere only to the short bit naming convention. For example, the three Least Significant bit of the ADCON2 register contain the ADC Operating Mode Selection bit. The short name for this field is MD and the long name is ADMD. Bit field access is only possible in C programs. The following example demonstrates a C program instruction for setting the ADC to operate in Accumulate mode:

```
ADCON2bits.MD = 0b001;
```

Individual bits in a bit field can also be accessed with long and short bit names. Each bit is the field name appended with the number of the bit position within the field. For example, the Most Significant mode bit has the short bit name MD2 and the long bit name is ADMD2. The following two examples demonstrate assembly program sequences for setting the ADC to operate in Accumulate mode:

```
MOVLW  ~(1<<MD2 | 1<<MD1)
ANDWF  ADCON2,F
```

```
MOVLW  1<<MD0
IORWF  ADCON2,F
```

```
BCF    ADCON2,ADMD2
BCF    ADCON2,ADMD1
BSF    ADCON2,ADMD0
```

5.3 Register and Bit Naming Exceptions

5.3.1 Status, Interrupt, and Mirror Bits

Status, Interrupt enables, Interrupt flags, and Mirror bits are contained in registers that span more than one peripheral. In these cases, the bit name shown is unique so there is no prefix or short name variant.

6. Register Legend

Table 6-1. Register Legend

Symbol	Definition
R	Readable bit
W	Writable bit
HS	Hardware settable bit
HC	Hardware clearable bit
S	Set only bit
C	Clear only bit
U	Unimplemented bit, read as '0'
'1'	Bit value is set
'0'	Bit value is cleared
x	Bit value is unknown
u	Bit value is unchanged
q	Bit value depends on condition
m	Bit value is predefined

7. PIC18 CPU

This family of devices contains a PIC18 8-bit CPU core based on the modified Harvard architecture. The PIC18 CPU supports:

- System arbitration which decides memory access allocation depending on user priorities
- Vectored interrupt capability with automatic two-level deep context saving
- 127-level deep hardware stack with overflow and underflow Reset capabilities
- Support Direct, Indirect, and Relative Addressing modes
- 8x8 hardware multiplier

Figure 7-1. Family Block Diagram

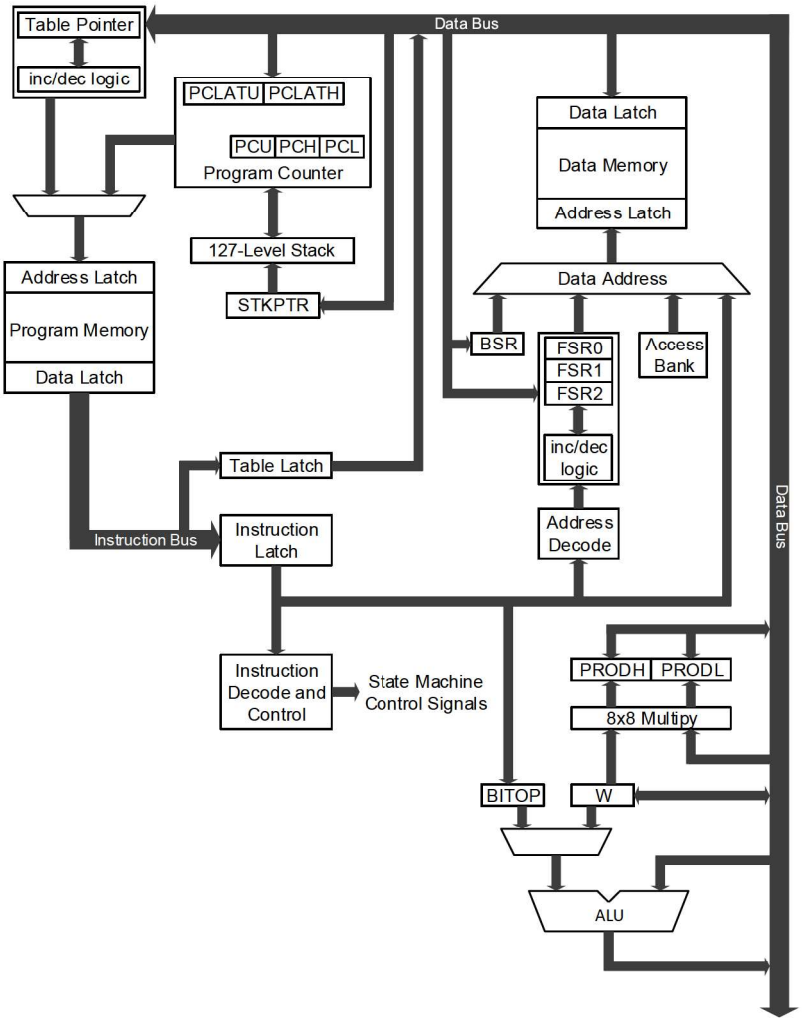

7.1 System Arbitration

The system arbiter resolves memory access between the system level selections (i.e., Main, Interrupt Service Routine) and peripheral selection (e.g., DMA and Scanner) based on user-assigned priorities. A block diagram of the system arbiter can be found below. Each of the system level and peripheral selections has its own priority selection registers. Memory access priority is resolved using the number written to the corresponding Priority registers, 0 being the highest priority selection and the maximum value being the lowest priority. All system level and peripheral level

selections default to the lowest priority configuration. If the same value is in two or more Priority registers, priority is given to the higher-listed selection according to the following table.

Table 7-1. Default Priorities

Selection		Priority Register Reset Value
System Level	ISR	7
	MAIN	7
Peripheral	DMA1	7
	DMA2	7
	DMA3	7
	DMA4	7
	SCANNER	7

Figure 7-2. System Arbiter Block Diagram

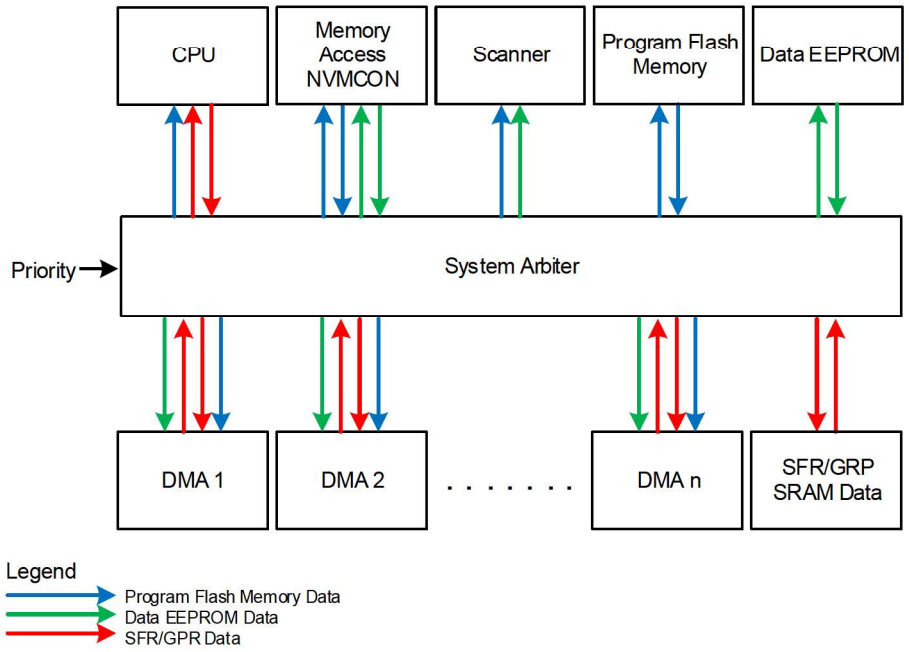

7.1.1 Priority Lock

The system arbiter grants memory access to the peripheral selections (DMAx, Scanner) as long as the PRLOCKED bit is set. Priority selections are locked by setting the PRLOCKED bit. Setting and clearing this bit requires a special sequence as an extra precaution against inadvertent changes. The following code examples demonstrate the Priority Lock and Priority Unlock sequences.

Example 7-1. Priority Lock Sequence

```
INTCON0bits.GIE = 0;          // Disable Interrupts;
PRLOCK = 0x55;
PRLOCK = 0xAA;
PRLOCKbits.PRLOCKED = 1;      // Grant memory access to peripherals;
INTCON0bits.GIE = 1;          // Enable Interrupts;
```

Example 7-2. Priority Unlock Sequence

```
INTCON0bits.GIE = 0;          // Disable Interrupts;
PRLOCK = 0x55;
PRLOCK = 0xAA;
PRLOCKbits.PRLOCKED = 0;      // Allow changing priority settings;
INTCON0bits.GIE = 1;          // Enable Interrupts;
```

7.2 Memory Access Scheme

The user can assign priorities to both system level and peripheral selections based on which the system arbiter grants memory access. Let us consider the following priority scenarios between ISR, MAIN and peripherals.

7.2.1 ISR Priority > Main Priority > Peripheral Priority

When the peripheral priority (e.g., DMA, Scanner) is lower than ISR and MAIN priority, and the peripheral requires:

1. Access to the Program Flash Memory, then the peripheral waits for an instruction cycle in which the CPU does not need to access the PFM (such as a branch instruction) and uses that cycle to do its own Program Flash Memory access, unless a PFM Read/Write operation is in progress.
2. Access to the SFR/GPR, then the peripheral waits for an instruction cycle in which the CPU does not need to access the SFR/GPR (such as `MOVLW`, `CALL`, `NOP`) and uses that cycle to do its own SFR/GPR access.
3. Access to the Data EEPROM, then the peripheral has access to Data EEPROM unless a Data EEPROM Read/Write operation is being performed.

This results in the lowest throughput for the peripheral to access the memory, and does so without any impact on execution times.

7.2.2 Peripheral Priority > ISR Priority > Main Priority

When the peripheral priority (DMA, Scanner) is higher than ISR and MAIN priority, the CPU operation is stalled when the peripheral requests memory. The CPU is held in its current state until the peripheral completes its operation. This results in the highest throughput for the peripheral to access the memory, but has the cost of stalling other execution while it occurs.

7.2.3 ISR Priority > Peripheral Priority > Main Priority

In this case, interrupt routines and peripheral operation (DMAx, Scanner) will stall the Main loop. Interrupt will preempt peripheral operation, which results in lowest interrupt latency.

7.2.4 Peripheral 1 Priority > ISR Priority > Main Priority > Peripheral 2 Priority

In this case, the Peripheral 1 will stall the execution of the CPU. However, Peripheral 2 can access the memory in cycles unused by Peripheral 1, ISR and the Main Routine.

7.3 8x8 Hardware Multiplier

This device includes an 8x8 hardware multiplier as part of the ALU within the CPU. The multiplier performs an unsigned operation and yields a 16-bit result that is stored in the product register, PROD. The multiplier's operation does not affect any flags in the STATUS register.

Making multiplication a hardware operation allows it to be completed in a single instruction cycle. This has the advantages of higher computational throughput and reduced code size for multiplication algorithms and allows the device to be used in many applications previously reserved for digital signal processors. A comparison of various hardware and software multiply operations, along with the savings in memory and execution time, is shown in Table 7-2.

Table 7-2. Performance Comparison for Various Multiply Operations

Routine	Multiply Method	Program Memory (Words)	Cycles (Max)	Time			
				@ 64 MHz	@ 40 MHz	@ 10 MHz	@ 4 MHz
8x8 unsigned	Without hardware multiply	13	69	4.3 µs	6.9 µs	27.6 µs	69 µs
	Hardware multiply	1	1	62.5 ns	100 ns	400 ns	1 µs
8x8 signed	Without hardware multiply	33	91	5.7 µs	9.1 µs	36.4 µs	91 µs
	Hardware multiply	6	6	375 ns	600 ns	2.4 µs	6 µs
16x16 unsigned	Without hardware multiply	21	242	15.1 µs	24.2 µs	96.8 µs	242 µs
	Hardware multiply	28	28	1.8 µs	2.8 µs	11.2 µs	28 µs
16x16 signed	Without hardware multiply	52	254	15.9 µs	25.4 µs	102.6 µs	254 µs
	Hardware multiply	35	40	2.5 µs	4.0 µs	16.0 µs	40 µs

7.3.1 Operation

Example 7-3 shows the instruction sequence for an 8x8 unsigned multiplication. Only one instruction is required when one of the arguments is already loaded in the WREG register. Example 7-4 shows the sequence to do an 8x8 signed multiplication. To account for the sign bits of the arguments, each argument's Most Significant bit (MSb) is tested and the appropriate subtractions are done.

Example 7-3. 8x8 Unsigned Multiply Routine

```
        MOVF    ARG1, W   ;
        MULWF   ARG2      ; ARG1 * ARG2 -> PRODH:PRODL
```

Example 7-4. 8x8 Signed Multiply Routine

```
        MOVF    ARG1, W
        MULWF   ARG2        ; ARG1 * ARG2 -> PRODH:PRODL
        BTFSC   ARG2, SB    ; Test Sign Bit
        SUBWF   PRODH, F    ; PRODH = PRODH - ARG1
        MOVF    ARG2, W
        BTFSC   ARG1, SB    ; Test Sign Bit
        SUBWF   PRODH, F    ; PRODH = PRODH - ARG2
```

7.3.2 16x16 Unsigned Multiplication Algorithm

Example 7-6 shows the sequence to do a 16x16 unsigned multiplication. Example 7-5 shows the algorithm that is used. The 32-bit result is stored in four registers.

Example 7-5. 16x16 Unsigned Multiply Algorithm

$$RES3:RES0 = ARG1H:ARG1L \bullet ARG2H:ARG2L = \left(ARG1H \bullet ARG2H \bullet 2^{16}\right) + \left(ARG1H \bullet ARG2L \bullet 2^{8}\right) + \left(ARG1L \bullet ARG2H \bullet 2^{8}\right) + \left(ARG1L \bullet ARG2L\right)$$

Example 7-6. 16x16 Unsigned Multiply Routine

```
        MOVF    ARG1L, W
        MULWF   ARG2L           ; ARG1L * ARG2L → PRODH:PRODL
        MOVFF   PRODH, RES1     ;
```

```
        MOVFF   PRODL, RES0     ;
;
        MOVF    ARG1H, W        ;
        MULWF   ARG2H           ; ARG1H * ARG2H → PRODH:PRODL
        MOVFF   PRODH, RES3     ;
        MOVFF   PRODL, RES2     ;
;
        MOVF    ARG1L, W
        MULWF   ARG2H           ; ARG1L * ARG2H → PRODH:PRODL
        MOVF    PRODL, W        ;
        ADDWF   RES1, F         ; Add cross products
        MOVF    PRODH, W        ;
        ADDWFC  RES2, F         ;
        CLRF    WREG            ;
        ADDWFC  RES3, F         ;
;
        MOVF    ARG1H, W        ;
        MULWF   ARG2L           ; ARG1H * ARG2L → PRODH:PRODL
        MOVF    PRODL, W        ;
        ADDWF   RES1, F         ; Add cross products
        MOVF    PRODH, W        ;
        ADDWFC  RES2, F         ;
        CLRF    WREG            ;
        ADDWFC  RES3, F         ;
```

7.3.3 16x16 Signed Multiplication Algorithm

Example 7-8 shows the sequence to do a 16x16 signed multiply. Example 7-7 shows the algorithm used. The 32-bit result is stored in four registers. To account for the sign bits of the arguments, the MSb for each argument pair is tested and the appropriate subtractions are done.

Example 7-7. 16x16 Signed Multiply Algorithm

$$RES3{:}RES0 = ARG1H{:}ARG1L \bullet ARG2H{:}ARG2L = \left(ARG1H \bullet ARG2H \bullet 2^{16}\right) + \left(ARG1H \bullet ARG2L \bullet 2^{8}\right) + \left(ARG1L \bullet ARG2H \bullet 2^{8}\right) + \left(ARG1L \bullet ARG2L\right) + \left(-1 \bullet ARG2H<7> \bullet ARG1H{:}ARG1L \bullet 2^{16}\right) + \left(-1 \bullet ARG1H<7> \bullet ARG2H{:}ARG2L \bullet 2^{16}\right)$$

Example 7-8. 16x16 Signed Multiply Routine

```
        MOVF    ARG1L, W
        MULW    ARG2L           ; ARG1L * ARG2L → PRODH:PRODL
        MOVF    PRODH, RES1     ;
        MOVFF   PRODL, RES0     ;
;
        MOVF    ARG1H, W
        MULWF   ARG2H           ; ARG1H * ARG2H → PRODH:PRODL
        MOVFF   PRODH, RES3     ;
        MOVFF   PRODL, RES2     ;
;
        MOVF    ARG1L, W
        MULWF   ARG2H           ; ARG1L * ARG2H → PRODH:PRODL
        MOVF    PRODL, W        ;
        ADDWF   RES1, F         ; Add cross products
        MOVF    PRODH, W        ;
        ADDWFC  RES2, F         ;
        CLRF    WREG            ;
        ADDWFC  RES3, F         ;
;
        MOVF    ARG1H, W        ;
        MULWF   ARG2L           ; ARG1H * ARG2L → PRODH:PRODL
        MOVF    PRODL, W        ;
        ADDWF   RES1, F         ; Add cross products
        MOVF    PRODH, W        ;
        ADDWFC  RES2, F         ;
        CLRF    WREG            ;
        ADDWFC  RES3, F         ;
;
```

```
        BTFSS   ARG2H, 7        ; ARG2H:ARG2L neg?
        BRA     SIGN_ARG1       ; no, check ARG1
        MOVF    ARG1L, W        ;
        SUBWF   RES2            ;
        MOVF    ARG1H, W        ;
        SUBWFB  RES3
;
SIGN_ARG1:
        BTFSS   ARG1H, 7        ; ARG1H:ARG1L neg?
        BRA     CONT_CODE       ; no, done
        MOVF    ARG2L, W        ;
        SUBWF   RES2            ;
        MOVF    ARG2H, W        ;
        SUBWFB  RES3
;
CONT_CODE:
          :
```

7.4 PIC18 Instruction Cycle

7.4.1 Instruction Flow/Pipelining

An “Instruction Cycle” consists of four cycles of the oscillator clock. The instruction fetch and execute are pipelined in such a manner that a fetch takes one instruction cycle, while the decode and execute take another instruction cycle. However, due to the pipelining, each instruction effectively executes in one cycle. If an instruction causes the Program Counter (PC) to change (e.g., GOTO), then two cycles are required to complete the instruction (Figure 7-3).

A fetch cycle begins with the Program Counter (PC) incrementing followed by the execution cycle. In the execution cycle, the fetched instruction is latched into the Instruction Register (IR). This instruction is then decoded and executed during the next few oscillator clock cycles. Data memory is read (operand read) and written (destination write) during the execution cycle as well.

Figure 7-3. Instruction Pipeline Flow

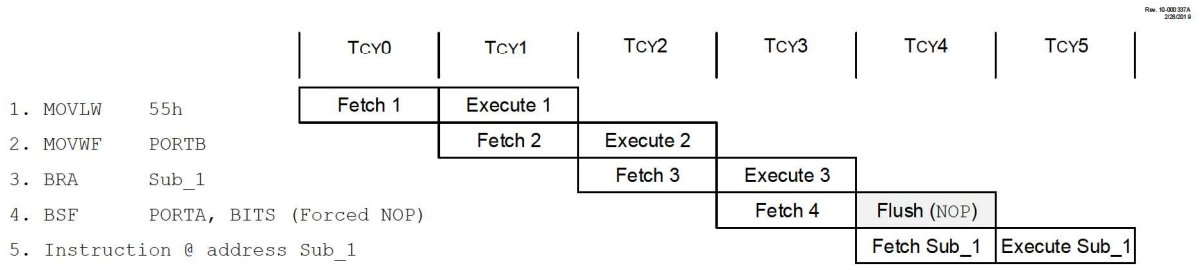

Note: There are some instructions that take multiple cycles to execute. Refer to the **“Instruction Set Summary”** section for details.

7.4.2 Instructions in Program Memory

The program memory is addressed in bytes. Instructions are stored as either two bytes, four bytes, or six bytes in program memory. The Least Significant Byte of an instruction word is always stored in a program memory location with an even address (LSb = 0). To maintain alignment with instruction boundaries, the PC increments in steps of two and the LSb will always read ‘0’. See the **“Program Counter”** section in the **“Memory Organization”** chapter for more details. The instructions in the Program Memory figure below shows how instruction words are stored in the program memory.

The CALL and GOTO instructions have the absolute program memory address embedded into the instruction. Since instructions are always stored on word boundaries, the data contained in the instruction is a word address. The word address is written to the corresponding bits of the Program Counter register, which accesses the desired byte address in program memory. Instruction #2 in the example shows how the instruction GOTO 0006h is encoded in the

program memory. Program branch instructions, which encode a relative address offset, operate in the same manner. The offset value stored in a branch instruction represents the number of single-word instructions that the PC will be offset by.

Figure 7-4. Instructions in Program Memory

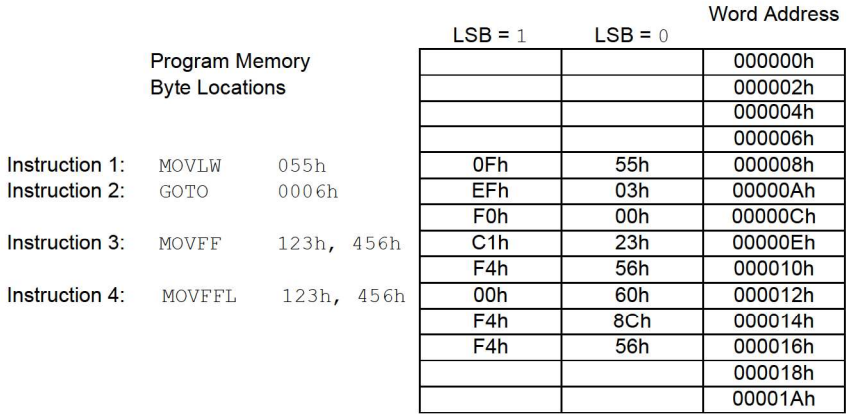

7.4.3 Multi-Word Instructions

The standard PIC18 instruction set has six two-word instructions: CALL, MOVFF, GOTO, LFSR, MOVSF and MOVSS and two three-word instructions: MOVFFL and MOVSFL. In all cases, the second and the third word of the instruction always has 1111 as its four Most Significant bits; the other 12 bits are literal data, usually a data memory address.

The use of 1111 in the four MSbs of an instruction specifies a special form of NOP. If the instruction is executed in proper sequence, immediately after the first word, the data in the second word is accessed and used by the instruction sequence. If the first word is skipped for some reason and the second word is executed by itself, a NOP is executed instead. This is necessary for cases when the two-word instruction is preceded by a conditional instruction that changes the PC.

Table 7-3 and Table 7-4 show more details of how two-word instructions work. Table 7-5 and Table 7-6 show more details of how three-word instructions work.

Important: See the **"PIC18 Instruction Execution and the Extended Instruction Set"** section for information on two-word instructions in the extended instruction set.

Table 7-3. Two-Word Instructions (Case 1)

Object Code	Source Code	Comment
0110 0110 0000 0000	TSTFSZ REG1	; is RAM location 0?
1100 0001 0101 0011	MOVFF REG1,REG2	; No, skip this word
1111 0100 0101 0110		; Execute this word as NOP
0010 0100 0000 0000	ADDWF REG3	; continue code

Table 7-4. Two-Word Instructions (Case 2)

Object Code	Source Code	Comment
0110 0110 0000 0000	TSTFSZ REG1	; is RAM location 0?
1100 0001 0101 0011	MOVFF REG1,REG2	; Yes, execute this word

.....continued		
Object Code	**Source Code**	**Comment**
1111 0100 0101 0110		; 2nd word of instruction
0010 0100 0000 0000	ADDWF REG3	; continue code

Table 7-5. Three-Word Instructions (Case 1)

Object Code	Source Code	Comment
0110 0110 0000 0000	TSTFSZ REG1	; is RAM location 0?
0000 0000 0110 0000	MOVFFL REG1,REG2	; Yes, skip this word
1111 0100 1000 1100		; Execute this word as NOP
1111 0100 0101 0110		; Execute this word as NOP
0010 0100 0000 0000	ADDWF REG3	; continue code

Table 7-6. Three-Word Instructions (Case 2)

Object Code	Source Code	Comment
0110 0110 0000 0000	TSTFSZ REG1	; is RAM location 0?
0000 0000 0110 0000	MOVFFL REG1,REG2	; No, execute this word
1111 0100 1000 1100		; 2nd word of instruction
1111 0100 0101 0110		; 3rd word of instruction
0010 0100 0000 0000	ADDWF REG3	; continue code

7.5 STATUS Register

The STATUS register contains the arithmetic status of the ALU. As with any other SFR, it can be the operand for any instruction. If the STATUS register is the destination for an instruction that affects the Z, DC, C, OV or N bits, the results of the instruction are not written; instead, the STATUS register is updated according to the instruction performed. Therefore, the result of an instruction with the STATUS register as its destination may be different than intended. As an example, `CLRF STATUS` will set the Z bit and leave the remaining Status bits unchanged (‘`000u u1uu`’).

It is recommended that only `BCF`, `BSF`, `SWAPF`, `MOVFF` and `MOVWF` instructions are used to alter the STATUS register, because these instructions do not affect the Z, C, DC, OV or N bits in the STATUS register. For other instructions that do not affect Status bits, see the instruction set summaries.

Important: The C and DC bits operate as the $\overline{\text{Borrow}}$ and $\overline{\text{Digit Borrow}}$ bits, respectively, in subtraction.

7.6 Call Shadow Register

When `CALL` instruction is used, the WREG, BSR and STATUS are automatically saved in hardware and can be accessed using the WREG_CSHAD, BSR_CSHAD and STATUS_CSHAD registers.

Important:
The contents of these registers should be handled correctly to avoid erroneous code execution.

7.7 Register Definitions: System Arbiter

7.7.1 ISRPR

Name: ISRPR
Address: 0x0BF

Interrupt Service Routine Priority Register

Bit	7	6	5	4	3	2	1	0
						PR[2:0]		
Access						R/W	R/W	R/W
Reset						1	1	1

Bits 2:0 – PR[2:0] Interrupt Service Routine Priority Selection

Value	Description
111	System Arbiter Priority Level: 7 (Lowest Priority)
110	System Arbiter Priority Level: 6
101	System Arbiter Priority Level: 5
100	System Arbiter Priority Level: 4
011	System Arbiter Priority Level: 3
010	System Arbiter Priority Level: 2
001	System Arbiter Priority Level: 1
000	System Arbiter Priority Level: 0 (Highest Priority)

7.7.2 MAINPR

Name: MAINPR
Address: 0x0BE

Main Routine Priority Register

Bit	7	6	5	4	3	2	1	0
						PR[2:0]		
Access						R/W	R/W	R/W
Reset						1	1	1

Bits 2:0 – PR[2:0] Main Routine Priority Selection

Value	Description
111	System Arbiter Priority Level: 7 (Lowest Priority)
110	System Arbiter Priority Level: 6
101	System Arbiter Priority Level: 5
100	System Arbiter Priority Level: 4
011	System Arbiter Priority Level: 3
010	System Arbiter Priority Level: 2
001	System Arbiter Priority Level: 1
000	System Arbiter Priority Level: 0 (Highest Priority)

7.7.3 DMAxPR

Name: DMAxPR
Address: 0x0B6,0x0B7,0x0B8,0x0B9

DMAx Priority Register

Bit	7	6	5	4	3	2	1	0
						PR[2:0]		
Access						R/W	R/W	R/W
Reset						1	1	1

Bits 2:0 – PR[2:0] DMAx Priority Selection

Value	Description
111	System Arbiter Priority Level: 7 (Lowest Priority)
110	System Arbiter Priority Level: 6
101	System Arbiter Priority Level: 5
100	System Arbiter Priority Level: 4
011	System Arbiter Priority Level: 3
010	System Arbiter Priority Level: 2
001	System Arbiter Priority Level: 1
000	System Arbiter Priority Level: 0 (Highest Priority)

7.7.4 SCANPR

Name: SCANPR
Address: 0x0B5

Scanner Priority Register

Bit	7	6	5	4	3	2	1	0
						PR[2:0]		
Access						R/W	R/W	R/W
Reset						1	1	1

Bits 2:0 – PR[2:0] Scanner Priority Selection

Value	Description
111	System Arbiter Priority Level: 7 (Lowest Priority)
110	System Arbiter Priority Level: 6
101	System Arbiter Priority Level: 5
100	System Arbiter Priority Level: 4
011	System Arbiter Priority Level: 3
010	System Arbiter Priority Level: 2
001	System Arbiter Priority Level: 1
000	System Arbiter Priority Level: 0 (Highest Priority)

7.7.5 PRLOCK

Name: PRLOCK
Address: 0x0B4

Priority Lock Register

Bit	7	6	5	4	3	2	1	0
								PRLOCKED
Access								R/W
Reset								0

Bit 0 – PRLOCKED PR Register Lock

Value	Description
1	Priority registers are locked and cannot be written; Peripherals do not have access to the memory
0	Priority registers can be modified by write operations; Peripherals do not have access to the memory

Important:

1. The PRLOCKED bit can only be set or cleared after the unlock sequence.
2. If the Configuration Bit PR1WAY = 1, the PRLOCKED bit cannot be cleared after it has been set. A device Reset will clear the bit and allow one more set.

7.7.6 PROD

Name: PROD
Address: 0x4F3

Timer Register
Product Register Pair

Bit	15	14	13	12	11	10	9	8
	PROD[15:8]							
Access	R/W	R/W	R/W	R/W	R/W	R/W	R/W	R/W
Reset	0	0	0	0	0	0	0	0

Bit	7	6	5	4	3	2	1	0
	PROD[7:0]							
Access	R/W	R/W	R/W	R/W	R/W	R/W	R/W	R/W
Reset	x	x	x	x	x	x	x	x

Bits 15:0 – PROD[15:0] PROD Most Significant

Notes: The individual bytes in this multi-byte register can be accessed with the following register names:

- PRODH: Accesses the high byte PROD[15:8]
- PRODL: Accesses the low byte PROD[7:0]

7.7.7 STATUS

Name: STATUS
Address: 0x4D8

STATUS Register

Bit	7	6	5	4	3	2	1	0
		$\overline{TO}$	$\overline{PD}$	N	OV	Z	DC	C
Access		R	R	R/W	R/W	R/W	R/W	R/W
Reset		1	1	0	0	0	0	0

Bit 6 – $\overline{TO}$ Time-Out
Reset States: POR/BOR = 1
All Other Resets = q

Value	Description
1	Set at power-up or by execution of CLRWDT or SLEEP instruction
0	A WDT Time-out occurred

Bit 5 – $\overline{PD}$ Power-Down
Reset States: POR/BOR = 1
All Other Resets = q

Value	Description
1	Set at power-up or by execution of CLRWDT instruction
0	Cleared by execution of the SLEEP instruction

Bit 4 – N Negative
Used for signed arithmetic (two's complement); indicates if the result is negative, (ALU MSb = 1).
Reset States: POR/BOR = 0
All Other Resets = u

Value	Description
1	The result is negative
0	The result is positive

Bit 3 – OV Overflow
Used for signed arithmetic (two's complement); indicates an overflow of the 7-bit magnitude, which causes the sign bit (bit 7) to change state.
Reset States: POR/BOR = 0
All Other Resets = u

Value	Description
1	Overflow occurred for current signed arithmetic operation
0	No overflow occurred

Bit 2 – Z Zero
Reset States: POR/BOR = 0
All Other Resets = u

Value	Description
1	The result of an arithmetic or logic operation is zero
0	The result of an arithmetic or logic operation is not zero

Bit 1 – DC Digit Carry / $\overline{Borrow}$
ADDWF, ADDLW, SUBLW, SUBWF instructions(1)
Reset States: POR/BOR = 0
All Other Resets = u

Value	Description
1	A carry-out from the 4th low-order bit of the result occurred

Value	Description
0	No carry-out from the 4th low-order bit of the result

Bit 0 – C Carry / $\overline{\text{Borrow}}$
ADDWF, ADDLW, SUBLW, SUBWF instructions(1,2)
Reset States: POR/BOR = 0
All Other Resets = u

Value	Description
1	A carry-out from the Most Significant bit of the result occurred
0	No carry-out from the Most Significant bit of the result occurred

Notes:

1. For $\overline{\text{Borrow}}$, the polarity is reversed. A subtraction is executed by adding the two's complement of the second operand.
2. For Rotate (RRCF, RLCF) instructions, this bit is loaded with either the high or low-order bit of the Source register.

7.8 Register Summary - System Arbiter Control

Address	Name	Bit Pos.	7	6	5	4	3	2	1	0
0x00 ... 0xB3	Reserved									
0xB4	PRLOCK	7:0								PRLOCKED
0xB5	SCANPR	7:0						PR[2:0]		
0xB6	DMA1PR	7:0						PR[2:0]		
0xB7	DMA2PR	7:0						PR[2:0]		
0xB8	DMA3PR	7:0						PR[2:0]		
0xB9	DMA4PR	7:0						PR[2:0]		
0xBA ... 0xBD	Reserved									
0xBE	MAINPR	7:0						PR[2:0]		
0xBF	ISRPR	7:0						PR[2:0]		
0xC0 ... 0x0372	Reserved									
0x0373	STATUS_CSHAD	7:0		$\overline{TO}$	$\overline{PD}$	N	OV	Z	DC	C
0x0374	WREG_CSHAD	7:0	WREG[7:0]							
0x0375	BSR_CSHAD	7:0			BSR[5:0]					
0x0376	Reserved									
0x0377	STATUS_SHAD	7:0		$\overline{TO}$	$\overline{PD}$	N	OV	Z	DC	C
0x0378	WREG_SHAD	7:0	WREG[7:0]							
0x0379	BSR_SHAD	7:0			BSR[5:0]					
0x037A	PCLAT_SHAD	7:0	PCLATH[7:0]							
		15:8				PCLATU[4:0]				
0x037C	FSR0_SHAD	7:0	FSRL[7:0]							
		15:8			FSRH[5:0]					
0x037E	FSR1_SHAD	7:0	FSRL[7:0]							
		15:8			FSRH[5:0]					
0x0380	FSR2_SHAD	7:0	FSRL[7:0]							
		15:8			FSRH[5:0]					
0x0382	PROD_SHAD	7:0	PROD[7:0]							
		15:8	PROD[15:8]							
0x0384 ... 0x04D7	Reserved									
0x04D8	STATUS	7:0		$\overline{TO}$	$\overline{PD}$	N	OV	Z	DC	C
0x04D9 ... 0x04F2	Reserved									
0x04F3	PROD	7:0	PROD[7:0]							
		15:8	PROD[15:8]							

8. Device Configuration

8.1 Configuration Settings

The Configuration settings allow the user to setup the device with several choices of oscillators, Resets and memory protection options. These are implemented at 0x300000 - 0x300009.

Important: The $\overline{\text{DEBUG}}$ Configuration bit is managed automatically by device development tools including debuggers and programmers. For normal device operation, this bit should be maintained as a '1'.

8.2 Code Protection

Code protection allows the device to be protected from unauthorized access. Internal access to the program memory is unaffected by any code protection setting. A single code protect bit controls the access for both program memory and data EEPROM memory.

The entire program memory and Data EEPROM space is protected from external reads and writes by the $\overline{\text{CP}}$ bit. When $\overline{\text{CP}}$ = 0, external reads and writes are inhibited and a read will return all '0's. The CPU can continue to read the memory, regardless of the protection bit settings. Self-writing the program memory is dependent upon the write protection setting.

8.3 User ID

32 words in the memory space (0x200000 - 0x20003F) are designated as ID locations where the user can store checksum or other code identification numbers. These locations are readable and writable during normal execution. See the **"User ID, Device ID and Configuration Settings Access, DIA and DCI"** section for more information on accessing these memory locations. For more information on checksum calculation, see the **"PIC18-Q40 Family Programming Specification"**, (DS40002143).

8.4 Device ID and Revision ID

The 16-bit device ID word is located at 0x3FFFFE and the 16-bit revision ID is located at 0x3FFFFC. These locations are read-only and cannot be erased or modified.

Development tools, such as device programmers and debuggers, may be used to read the Device ID, Revision ID and Configuration bits. Refer to the **"NVM - Nonvolatile Memory Module"** section for more information on accessing these locations.

8.5 Register Definitions: Configuration Settings

8.5.1 CONFIG1

Name: CONFIG1
Address: 0x300000

Configuration Byte 1

Bit	7	6	5	4	3	2	1	0
		RSTOSC[2:0]				FEXTOSC[2:0]		
Access		R/W	R/W	R/W		R/W	R/W	R/W
Reset		1	1	1		1	1	1

Bits 6:4 – RSTOSC[2:0] Power-up Default Value for COSC
This value is the Reset default value for COSC and selects the oscillator first used by user software. Refer to COSC operation.

Value	Description
111	EXTOSC operating per FEXTOSC bits
110	HFINTOSC with HFFRQ = 4 MHz and CDIV = 4:1. Resets COSC/NOSC to b'110'.
101	LFINTOSC
100	SOSC
011	Reserved
010	EXTOSC with 4x PLL, with EXTOSC operating per FEXTOSC bits
001	Reserved
000	HFINTOSC with HFFRQ = 64 MHz and CDIV = 1:1. Resets COSC/NOSC to b'110'.

Bits 2:0 – FEXTOSC[2:0] External Oscillator Mode Selection

Value	Description
111	ECH (external clock) above 8 MHz
110	ECM (external clock) for 500 kHz to 8 MHz
101	ECL (external clock) below 500 kHz
100	Oscillator not enabled
011	Reserved (do not use)
010	HS (crystal oscillator) above 4 MHz
001	XT (crystal oscillator) above 500 kHz, below 4 MHz
000	LP (crystal oscillator) optimized for 32.768 kHz

8.5.2 CONFIG2

Name: CONFIG2
Address: 0x300001

Configuration Byte 2

Bit	7	6	5	4	3	2	1	0
	FCMENS	FCMENP	FCMEN		CSWEN		PR1WAY	$\overline{\text{CLKOUTEN}}$
Access	R/W	R/W	R/W		R/W		R/W	R/W
Reset	1	1	1		1		1	1

Bit 7 – FCMENS Fail-Safe Clock Monitor Enable - Secondary XTAL Enable

Value	Description
1	Fail-Safe Clock Monitor enabled; timer will flag FSCMS bit and OSFIF interrupt on SOSC failure
0	Fail-Safe Clock Monitor disabled

Bit 6 – FCMENP Fail-Safe Clock Monitor Enable - Primary XTAL Enable

Value	Description
1	Fail-Safe Clock Monitor enabled; timer will flag FSCMP bit and OSFIF interrupt on EXTOSC failure
0	Fail-Safe Clock Monitor disabled

Bit 5 – FCMEN Fail-Safe Clock Monitor Enable

Value	Description
1	Fail-Safe Clock Monitor enabled
0	Fail-Safe Clock Monitor disabled

Bit 3 – CSWEN Clock Switch Enable

Value	Description
1	Writing to NOSC and NDIV is allowed
0	The NOSC and NDIV bits cannot be changed by user software

Bit 1 – PR1WAY PRLOCKED One-Way Set Enable

Value	Description
1	PRLOCKED bit can be cleared and set only once; Priority registers remain locked after one clear/set cycle
0	PRLOCKED bit can be set and cleared repeatedly (subject to the unlock sequence)

Bit 0 – $\overline{\text{CLKOUTEN}}$ Clock Out Enable
If FEXTOSC = HS, XT, LP, then this bit is ignored.
Otherwise:

Value	Description
1	CLKOUT function is disabled; I/O function on OSC2
0	CLKOUT function is enabled; $F_{OSC}/4$ clock appears at OSC2

8.5.3 CONFIG3

Name: CONFIG3
Address: 0x300002

Configuration Byte 3

Bit	7	6	5	4	3	2	1	0
	BOREN[1:0]		$\overline{\text{LPBOREN}}$	IVT1WAY	MVECEN	PWRTS[1:0]		MCLRE
Access	R/W	R/W	R/W	R/W	R/W	R/W	R/W	R/W
Reset	0	1	1	1	1	1	1	1

Bits 7:6 – BOREN[1:0] Brown-out Reset Enable
When enabled, Brown-out Reset Voltage (V_{BOR}) is set by the BORV bit.

Value	Description
11	Brown-out Reset enabled, SBOREN bit is ignored
10	Brown-out Reset enabled while running, disabled in Sleep; SBOREN is ignored
01	Brown-out Reset enabled according to SBOREN
00	Brown-out Reset disabled

Bit 5 – $\overline{\text{LPBOREN}}$ Low-Power BOR Enable

Value	Description
1	Low-Power Brown-out Reset is disabled
0	Low-Power Brown-out Reset is enabled

Bit 4 – IVT1WAY IVTLOCK One-Way Set Enable

Value	Description
1	IVTLOCK bit can be cleared and set only once; IVT registers remain locked after one clear/set cycle
0	IVTLOCK bit can be set and cleared repeatedly (subject to the unlock sequence)

Bit 3 – MVECEN Multivector Enable

Value	Description
1	Multivector is enabled; vector table used for interrupts
0	Legacy interrupt behavior

Bits 2:1 – PWRTS[1:0] Power-up Timer Selection

Value	Description
11	PWRT is disabled
10	PWRT is set at 64 ms
01	PWRT is set at 16 ms
00	PWRT is set at 1 ms

Bit 0 – MCLRE Master Clear ($\overline{\text{MCLR}}$) Enable

Value	Condition	Description
x	If LVP = 1	RA3 pin function is $\overline{\text{MCLR}}$
1	If LVP = 0	$\overline{\text{MCLR}}$ pin is $\overline{\text{MCLR}}$
0	If LVP = 0	$\overline{\text{MCLR}}$ pin function is port defined function

8.5.4 CONFIG4

Name: CONFIG4
Address: 0x300003

Configuration Byte 4

Bit	7	6	5	4	3	2	1	0
	$\overline{XINST}$		LVP	STVREN	PPS1WAY	$\overline{ZCD}$	BORV[1:0]	
Access	R/W		R/W	R/W	R/W	R/W	R/W	R/W
Reset	1		1	1	1	1	1	1

Bit 7 – $\overline{XINST}$ Extended Instruction Set Enable

Value	Description
1	Extended Instruction Set and Indexed Addressing mode disabled (Legacy mode)
0	Extended Instruction Set and Indexed Addressing mode enabled

Bit 5 – LVP Low-Voltage Programming Enable
The LVP bit cannot be written (to zero) while operating from the LVP programming interface. The purpose of this rule is to prevent the user from dropping out of LVP mode while programming from LVP mode, or accidentally eliminating LVP mode from the Configuration state.

Value	Description
1	Low-Voltage Programming enabled. $\overline{MCLR}/V_{PP}$ pin function is $\overline{MCLR}$. MCLRE Configuration bit is ignored.
0	HV on $\overline{MCLR}/V_{PP}$ must be used for programming

Bit 4 – STVREN Stack Overflow/Underflow Reset Enable

Value	Description
1	Stack Overflow or Underflow will cause a Reset
0	Stack Overflow or Underflow will not cause a Reset

Bit 3 – PPS1WAY PPSLOCKED One-Way Set Enable

Value	Description
1	The PPSLOCKED bit can only be set once after an unlocking sequence is executed; once PPSLOCK is set, all future changes to PPS registers are prevented
0	The PPSLOCKED bit can be set and cleared as needed (unlocking sequence is required)

Bit 2 – $\overline{ZCD}$ ZCD Disable

Value	Description
1	ZCD disabled, ZCD can be enabled by setting the ZCDSEN bit of ZCDCON
0	ZCD always enabled, PMDx[ZCDMD] bit is ignored

Bits 1:0 – BORV[1:0] Brown-out Reset Voltage Selection(1)

Value	Description
11	Brown-out Reset Voltage (V_{BOR}) set to 1.90V
10	Brown-out Reset Voltage (V_{BOR}) set to 2.45V
01	Brown-out Reset Voltage (V_{BOR}) set to 2.7V
00	Brown-out Reset Voltage (V_{BOR}) set to 2.85V

Note:

1. The higher voltage setting is recommended for operation at or above 16 MHz.

8.5.5 CONFIG5

Name: CONFIG5
Address: 0x300004

Configuration Byte 5

Bit	7	6	5	4	3	2	1	0
		WDTE[1:0]		WDTCPS[4:0]				
Access		R/W	R/W	R/W	R/W	R/W	R/W	R/W
Reset		1	1	1	1	1	1	1

Bits 6:5 – WDTE[1:0] WDT Operating Mode

Value	Description
11	WDT enabled regardless of Sleep; SEN bit in WDTCON0 is ignored
10	WDT enabled while Sleep = 0, suspended when Sleep = 1; SEN bit in WDTCON0 is ignored
01	WDT enabled/disabled by SEN bit in WDTCON0
00	WDT disabled, SEN bit in WDTCON0 is ignored

Bits 4:0 – WDTCPS[4:0] WDT Period Select

WDTCPS	WDTCON0[WDTPS] at POR				Software Control of WDTPS?
	Value	Divider Ratio		Typical Time Out (F_{IN} = 31 kHz)	
11111	01011	1:65536	2^{16}	2s	Yes
11110 to 10011	11110 to 10011	1:32	2^{5}	1 ms	No
10010	10010	1:8388608	2^{23}	256s	No
10001	10001	1:4194304	2^{22}	128s	No
10000	10000	1:2097152	2^{21}	64s	No
01111	01111	1:1048576	2^{20}	32s	No
01110	01110	1:524288	2^{19}	16s	No
01101	01101	1:262144	2^{18}	8s	No
01100	01100	1:131072	2^{17}	4s	No
01011	01011	1:65536	2^{16}	2s	No
01010	01010	1:32768	2^{15}	1s	No
01001	01001	1:16384	2^{14}	512 ms	No
01000	01000	1:8192	2^{13}	256 ms	No
00111	00111	1:4096	2^{12}	128 ms	No
00110	00110	1:2048	2^{11}	64 ms	No
00101	00101	1:1024	2^{10}	32 ms	No
00100	00100	1:512	2^{9}	16 ms	No
00011	00011	1:256	2^{8}	8 ms	No
00010	00010	1:128	2^{7}	4 ms	No
00001	00001	1:64	2^{6}	2 ms	No
00000	00000	1:32	2^{5}	1 ms	No

8.5.6 CONFIG6

Name: CONFIG6
Address: 0x300005

Configuration Byte 6

Bit	7	6	5	4	3	2	1	0
			WDTCCS[2:0]			WDTCWS[2:0]		
Access			R/W	R/W	R/W	R/W	R/W	R/W
Reset			1	1	1	1	1	1

Bits 5:3 – WDTCCS[2:0] WDT Input Clock Selector

Value	Condition	Description
x	WDTE = 00	These bits have no effect
111	WDTE ≠ 00	Software control
110 to 011	WDTE ≠ 00	Reserved
010	WDTE ≠ 00	WDT reference clock is the SOSC
001	WDTE ≠ 00	WDT reference clock is the 31.25 kHz MFINTOSC
000	WDTE ≠ 00	WDT reference clock is the 31.0 kHz LFINTOSC

Bits 2:0 – WDTCWS[2:0] WDT Window Select

WDTCWS	WDTCON1[WINDOW] at POR			Software Control of WINDOW	Keyed Access Required?
	Value	Window Delay Percent of Time	Window Opening Percent of Time		
111	111	n/a	100	Yes	No
110	110	n/a	100	No	Yes
101	101	25	75		
100	100	37.5	62.5		
011	011	50	50		
010	010	62.5	37.5		
001	001	75	25		
000	000	87.5	12.5		

8.5.7 CONFIG7

Name: CONFIG7
Address: 0x300006

Configuration Byte 7

Bit	7	6	5	4	3	2	1	0
			$\overline{\text{DEBUG}}$	$\overline{\text{SAFEN}}$	$\overline{\text{BBEN}}$	BBSIZE[2:0]		
Access			R/W	R/W	R/W	R/W	R/W	R/W
Reset			1	1	1	1	1	1

Bit 5 – $\overline{\text{DEBUG}}$ Debugger Enable

Value	Description
1	Background debugger disabled
0	Background debugger enabled

Bit 4 – $\overline{\text{SAFEN}}$ Storage Area Flash (SAF) Enable(1)

Value	Description
1	SAF is disabled
0	SAF is enabled

Bit 3 – $\overline{\text{BBEN}}$ Boot Block Enable(1)

Value	Description
1	Boot Block is disabled
0	Boot Block is enabled

Bits 2:0 – BBSIZE[2:0] Boot Block Size Selection(2)

Table 8-1. Boot Block Size

$\overline{\text{BBEN}}$	BBSIZE	End Address of Boot Block	Boot Block Size (words)		
			PIC18FX4Q40	PIC18FX5Q40	PIC18FX6Q40
1	xxx	—	—		
0	111	00 03FFh	512		
0	110	00 07FFh	1024		
0	101	00 0FFFh	2048		
0	100	00 1FFFh	4096		
0	011	00 3FFFh	—	8192	
0	010	00 7FFFh	—		16384
0	001	00 FFFFh	—		
0	000	01 FFFFh	—		

Notes:

1. Once protection is enabled through ICSP™ or a self-write, it can only be reset through a Bulk Erase.
2. BBSIZE[2:0] bits can only be changed when BBEN = 1. Once BBEN = 0, BBSIZE[2:0] can only be changed through a Bulk Erase.

8.5.8 CONFIG8

Name: CONFIG8
Address: 0x300007

Configuration Byte 8

Bit	7	6	5	4	3	2	1	0
	$\overline{\text{WRTAPP}}$				$\overline{\text{WRTSAF}}$	$\overline{\text{WRTD}}$	$\overline{\text{WRTC}}$	$\overline{\text{WRTB}}$
Access	R/W				R/W	R/W	R/W	R/W
Reset	1				1	1	1	1

Bit 7 – $\overline{\text{WRTAPP}}$ Application Block Write Protection(1)

Value	Description
1	Application Block is NOT write-protected
0	Application Block is write-protected

Bit 3 – $\overline{\text{WRTSAF}}$ Storage Area Flash (SAF) Write Protection(1,2)

Value	Description
1	SAF is NOT write-protected
0	SAF is write-protected

Bit 2 – $\overline{\text{WRTD}}$ Data EEPROM Write Protection(1)

Value	Description
1	Data EEPROM is NOT write-protected
0	Data EEPROM is write-protected

Bit 1 – $\overline{\text{WRTC}}$ Configuration Register Write Protection(1)

Value	Description
1	Configuration registers are NOT write-protected
0	Configuration registers are write-protected

Bit 0 – $\overline{\text{WRTB}}$ Boot Block Write Protection(1,3)

Value	Description
1	Boot Block is NOT write-protected
0	Boot Block is write-protected

Notes:

1. Once protection is enabled through ICSP™ or a self-write, it can only be reset through a Bulk Erase.
2. Applicable only if $\overline{\text{SAFEN}}$ = 0.
3. Applicable only if $\overline{\text{BBEN}}$ = 0.

8.5.9 CONFIG9

Name: CONFIG9
Address: 0x300008

Configuration Byte 9

Bit	7	6	5	4	3	2	1	0
								$\overline{CP}$
Access								R/W
Reset								1

Bit 0 – $\overline{CP}$ User Program Flash Memory and Data EEPROM Code Protection

Value	Description
1	User Program Flash Memory and Data EEPROM code protection are disabled
0	User Program Flash Memory and Data EEPROM code protection are enabled

8.6 Register Summary - Configuration Settings

Address	Name	Bit Pos.	7	6	5	4	3	2	1	0
0x00 ... 0x2FFFFF	Reserved									
0x300000	CONFIG1	7:0		RSTOSC[2:0]				FEXTOSC[2:0]		
0x300001	CONFIG2	7:0	FCMENS	FCMENP	FCMEN		CSWEN		PR1WAY	CLKOUTEN
0x300002	CONFIG3	7:0	BOREN[1:0]		LPBOREN	IVT1WAY	MVECEN	PWRTS[1:0]		MCLRE
0x300003	CONFIG4	7:0	XINST		LVP	STVREN	PPS1WAY	ZCD	BORV[1:0]	
0x300004	CONFIG5	7:0		WDTE[1:0]		WDTCPS[4:0]				
0x300005	CONFIG6	7:0			WDTCCS[2:0]			WDTCWS[2:0]		
0x300006	CONFIG7	7:0			DEBUG	SAFEN	BBEN	BBSIZE[2:0]		
0x300007	CONFIG8	7:0	WRTAPP				WRTSAF	WRTD	WRTC	WRTB
0x300008	CONFIG9	7:0								CP

8.7 Register Definitions: Device ID and Revision ID

8.7.1 Device ID

Name: DEVICEID
Address: 0x3FFFFE

Device ID Register

Bit	15	14	13	12	11	10	9	8
	DEV[15:8]							
Access	R	R	R	R	R	R	R	R
Reset	q	q	q	q	q	q	q	q

Bit	7	6	5	4	3	2	1	0
	DEV[7:0]							
Access	R	R	R	R	R	R	R	R
Reset	q	q	q	q	q	q	q	q

Bits 15:0 – DEV[15:0] Device ID

Device	Device ID
PIC18F04Q40	7640h
PIC18F05Q40	7600h
PIC18F06Q40	75C0h
PIC18F14Q40	7620h
PIC18F15Q40	75E0h
PIC18F16Q40	75A0h

8.7.2 Revision ID

Name: REVISIONID
Address: 0x3FFFFC

Revision ID Register

Bit	15	14	13	12	11	10	9	8
	1010[3:0]				MJRREV[5:2]			
Access	R	R	R	R	RO	RO	RO	RO
Reset	1	0	1	0	q	q	q	q

Bit	7	6	5	4	3	2	1	0
	MJRREV[1:0]		MNRREV[5:0]					
Access	RO	RO	RO	RO	RO	RO	RO	RO
Reset	q	q	q	q	q	q	q	q

Bits 15:12 – 1010[3:0] Read as `'b1010`
These bits are fixed with value `'b1010` for all devices in this family.

Bits 11:6 – MJRREV[5:0] Major Revision ID
These bits are used to identify a major revision (A0, B0, C0, etc.).
Revision A = `'b00 0000`
Revision B = `'b00 0001`

Bits 5:0 – MNRREV[5:0] Minor Revision ID
These bits are used to identify a minor revision.
Revision A0 = `'b00 0000`
Revision B0 = `'b00 0000`
Revision B1 = `'b00 0001`

Tip: For example, the REVISIONID register value for revision B1 will be 0xA041.

8.8 Register Summary - DEVID/REVID

Address	Name	Bit Pos.	7	6	5	4	3	2	1	0
0x00 ... 0x3FFFFB	Reserved									
0x3FFFFC	REVISIONID	7:0	MJRREV[1:0]		MNRREV[5:0]					
		15:8	1010[3:0]				MJRREV[5:2]			
0x3FFFFE	DEVICEID	7:0	DEV[7:0]							
		15:8	DEV[15:8]							

9. Memory Organization

There are three types of memory in PIC18 microcontroller devices:

- Program Memory
- Data RAM
- Data EEPROM

In Harvard architecture devices, the data and program memories use separate buses that allow for concurrent access of the two memory spaces. The data EEPROM, for practical purposes, can be regarded as a peripheral device, since it is addressed and accessed through a set of control registers.

Additional detailed information on the operation of the Program Flash Memory and data EEPROM memory is provided in the **"NVM - Nonvolatile Memory Module"** section.

9.1 Program Memory Organization

PIC18 microcontrollers implement a 21-bit Program Counter, which is capable of addressing a 2 Mbyte program memory space. Accessing a location between the upper boundary of the physically implemented memory and the 2 Mbyte address will return all '0's (a NOP instruction).

Refer to the following tables for device memory maps and code protection Configuration bits associated with the various sections of PFM.

The Reset vector address is at 000000h. The PIC18-Q40 devices feature a vectored interrupt controller with a dedicated interrupt vector table stored in the program memory. Refer to the **"VIC - Vectored Interrupt Controller Module"** chapter for more details.

Figure 9-1. Program and Data Memory Map

<table>
<tr><th rowspan="2">Address</th><th colspan="3">Device</th></tr>
<tr><th>PIC18Fx4Q40</th><th>PIC18Fx5Q40</th><th>PIC18Fx6Q40</th></tr>
<tr><td>00 0000h
to
00 3FFFh</td><td>Program Flash Memory (8KW)(1)</td><td rowspan="2">Program Flash Memory (16 KW)(1)</td><td rowspan="3">Program Flash Memory (32 KW)(1)</td></tr>
<tr><td>00 4000h
to
00 7FFFh</td><td rowspan="4">Not Present(2)</td></tr>
<tr><td>00 8000h
to
00 FFFFh</td><td rowspan="3">Not Present(2)</td></tr>
<tr><td>01 0000h
to
01 FFFFh</td><td rowspan="2">Not Present(2)</td></tr>
<tr><td>02 0000h
to
1F FFFFh</td></tr>
<tr><td>20 0000h
to
20 003Fh</td><td colspan="3">User IDs (32 Words)(3)</td></tr>
<tr><td>20 0040h
to
2B FFFFh</td><td colspan="3">Reserved</td></tr>
<tr><td>2C 0000h
to
2C 00FFh</td><td colspan="3">Device Information Area (DIA)(3)(5)</td></tr>
<tr><td>2C 0100h
to
2F FFFFh</td><td colspan="3">Reserved</td></tr>
<tr><td>30 0000h
to
30 0009h</td><td colspan="3">Configuration Bytes (3)</td></tr>
<tr><td>30 000Ah
to
37 FFFFh</td><td colspan="3">Reserved</td></tr>
<tr><td>38 0000h
to
38 01FFh</td><td colspan="3">Data EEPROM (512 Bytes)</td></tr>
<tr><td>38 0200h
to
3B FFFFh</td><td colspan="3">Reserved</td></tr>
<tr><td>3C 0000h
to
3C 0009h</td><td colspan="3">Device Configuration Information(3)(4)(5)</td></tr>
<tr><td>3C 000Ah
to
3F FFFBh</td><td colspan="3">Reserved</td></tr>
<tr><td>3F FFFCh
to
3F FFFDh</td><td colspan="3">Revision ID (1 Word)(3)(4)(5)</td></tr>
<tr><td>3F FFFEh
to
3F FFFFh</td><td colspan="3">Device ID (1 Word)(3)(4)(5)</td></tr>
</table>

Note 1: Storage Area Flash is implemented as the last 128 Words of User Flash, if enabled.
2: The addresses do not roll over. The region is read as '0'.
3: Not code-protected.
4: Hard-coded in silicon.
5: This region cannot be written by the user and it's not affected by a Bulk Erase.

9.1.1 Memory Access Partition

In the PIC18-Q40 devices, the program memory can be further partitioned into the following sub-blocks:

- Application block
- Boot block
- Storage Area Flash (SAF) block

Refer to the Program Flash Memory Partition table for more details.

9.1.1.1 Application Block

Application block is where the user's firmware resides by default. Default settings of the Configuration bits ($\overline{BBEN}$ = 1 and $\overline{SAFEN}$ = 1) assign all memory in the program Flash memory area to the application block. The $\overline{WRTAPP}$ Configuration bit is used to write-protect the application block.

9.1.1.2 Boot Block

Boot block is an area in program memory that is ideal for storing bootloader code. Code placed in this area can be executed by the CPU. The boot block can be write-protected, independent of the main application block. The Boot Block is enabled by the $\overline{BBEN}$ Configuration bit and size is based on the value of the BBSIZE Configuration bits. The $\overline{WRTB}$ Configuration bit is used to write-protect the Boot Block.

9.1.1.3 Storage Area Flash

Storage Area Flash (SAF) is the area in program memory that can be used as data storage. SAF is enabled by the $\overline{SAFEN}$ Configuration bit. If enabled, the code placed in this area cannot be executed by the CPU. The SAF block is placed at the end of memory and spans 128 Words. The $\overline{WRTSAF}$ Configuration bit is used to write-protect the Storage Area Flash.

Important: If write-protected locations are written to, memory is not changed and the WRERR bit is set.

Table 9-1. Program Flash Memory Partition

<table>
<tr><th rowspan="2">Region</th><th rowspan="2">Address</th><th colspan="4">Partition(3)</th></tr>
<tr><th>$\overline{BBEN}$ = 1
$\overline{SAFEN}$ = 1</th><th>$\overline{BBEN}$ = 1
$\overline{SAFEN}$ = 0</th><th>$\overline{BBEN}$ = 0
$\overline{SAFEN}$ = 1</th><th>$\overline{BBEN}$ = 0
$\overline{SAFEN}$ = 0</th></tr>
<tr><td rowspan="3">Program Flash Memory</td><td>00 0000h
....
Last Boot Block Memory Address</td><td rowspan="3">Application Block</td><td rowspan="2">Application Block</td><td>Boot Block</td><td>Boot Block</td></tr>
<tr><td>Last Boot Block Memory Address(1) + 1
....
Last Program Memory Address(2) - 100h</td><td rowspan="2">Application Block</td><td>Application Block</td></tr>
<tr><td>Last Program Memory Address(2) - FEh(4)
....
Last Program Memory Address(2)</td><td>Storage Area Flash Block</td><td>Storage Area Flash Block</td></tr>
</table>

Notes:

1. Last Boot Block address is based on BBSIZE bits. Refer to the **"Device Configuration"** chapter for more details.
2. For Last Program Memory address refer the table above.
3. Refer to the **"Device Configuration"** chapter for $\overline{\text{BBEN}}$ and $\overline{\text{SAFEN}}$ bit definitions.
4. Storage Area Flash is implemented as the last 128 Words of user Flash memory.

9.1.2 Program Counter

The Program Counter (PC) specifies the address of the instruction to fetch for execution. The PC is 21 bits wide and is contained in three separate 8-bit registers. The low byte, known as the PCL register, is both readable and writable. The high byte, or PCH register, contains the PC[15:8] bits; it is not directly readable or writable. Updates to the PCH register are performed through the PCLATH register. The upper byte is called PCU. This register contains the PC[20:16] bits; it is also not directly readable or writable. Updates to the PCU register are performed through the PCLATU register.

The contents of PCLATH and PCLATU are transferred to the Program Counter by any operation that writes PCL. Similarly, the upper two bytes of the Program Counter are transferred to PCLATH and PCLATU by an operation that reads PCL. This is useful for computed offsets to the PC (see Computed GOTO).

The PC addresses bytes in the program memory. To prevent the PC from becoming misaligned with word instructions, the Least Significant bit of PCL is fixed to a value of '0'. The PC increments by two to address sequential instructions in the program memory.

The CALL, RCALL, GOTO and program branch instructions write to the Program Counter directly. For these instructions, the contents of PCLATH and PCLATU are not transferred to the Program Counter.

9.1.3 Return Address Stack

The return address stack allows any combination of up to 127 program calls and interrupts to occur. The PC is pushed onto the stack when a CALL or RCALL instruction is executed or an interrupt is Acknowledged. The PC value is pulled off the stack on a RETURN, RETLW or a RETFIE instruction. PCLATU and PCLATH are not affected by any of the RETURN or CALL instructions.

The Stack Pointer is readable and writable and the address on the top of the stack is readable and writable through the Top-of-Stack (TOS) Special File registers. Data can also be pushed to, or popped from the stack, using these registers.

A CALL type instruction causes a push onto the stack; the Stack Pointer is first incremented and the location pointed to by the Stack Pointer is written with the contents of the PC (already pointing to the instruction following the CALL). A RETURN type instruction causes a pop from the stack; the contents of the location pointed to by the STKPTR are transferred to the PC and then the Stack Pointer is decremented.

The Stack Pointer is initialized to 0x00 after all Resets.

9.1.3.1 Top-of-Stack Access

Only the top of the return address stack (TOS) is readable and writable. A set of three registers, TOSU:TOSH:TOSL, hold the contents of the stack location pointed to by the STKPTR register (see Figure 9-2). This allows users to implement a software stack if necessary. After a CALL, RCALL or interrupt, the software can read the pushed value by reading the TOSU:TOSH:TOSL registers. These values can be placed on a user defined software stack. At return time, the software can return these values to TOSU:TOSH:TOSL and do a return.

The user must disable the Global Interrupt Enable (GIE) bits while accessing the stack to prevent inadvertent stack corruption.

Figure 9-2. Return Address Stack and Associated Registers

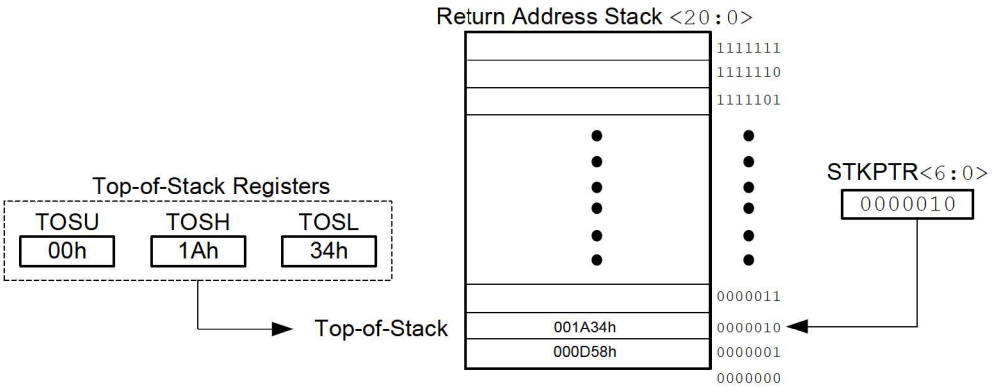

9.1.3.2 Return Stack Pointer

The STKPTR register contains the Stack Pointer value. The STKOVF (Stack Overflow) Status bit and the STKUNF (Stack Underflow) Status bit can be accessed using the PCON0 register. The value of the Stack Pointer can be zero through 127. On Reset, the Stack Pointer value will be zero. The user may read and write the Stack Pointer value. After the PC is pushed onto the stack 128 times (without popping any values off the stack), the STKOVF bit is set. The STKOVF bit is cleared by software or by a POR. The action that takes place when the stack becomes full depends on the state of the STVREN (Stack Overflow Reset Enable) Configuration bit.

If STVREN is set (default), a Reset will be generated and a Stack Overflow will be indicated by the STKOVF bit. This includes CALL and CALLW instructions, as well as stacking the return address during an interrupt response. The STKOVF bit will remain set and the Stack Pointer will be set to zero.

If STVREN is cleared, the STKOVF bit will be set on the 128th push and the Stack Pointer will remain at 127 but no Reset will occur. Any additional pushes will overwrite the 127st push but the STKPTR will remain unchanged.

Setting STKOVF = 1 in software will change the bit, but will not generate a Reset.

The STKUNF bit is set when a stack pop returns a value of zero. The STKUNF bit is cleared by software or by POR. The action that takes place when the stack becomes full depends on the state of the STVREN (Stack Overflow Reset Enable) Configuration bit.

If STVREN is set (default) and the stack has been popped enough times to unload the stack, the next pop will return a value of zero to the PC, it will set the STKUNF bit and a Reset will be generated. This condition can be generated by the RETURN, RETLW and RETFIE instructions.

If STVREN is cleared, the STKUNF bit will be set, but no Reset will occur.

Important: Returning a value of zero to the PC on an underflow has the effect of vectoring the program to the Reset vector, where the stack conditions can be verified and appropriate actions can be taken. This is not the same as a Reset, as the contents of the SFRs are not affected.

9.1.3.3 PUSH and POP Instructions

Since the Top-of-Stack is readable and writable, the ability to push values onto the stack and pull values off the stack without disturbing normal program execution is a desirable feature. The PIC18 instruction set includes two instructions, PUSH and POP, that permit the TOS to be manipulated under software control. TOSU, TOSH and TOSL can be modified to place data or a return address on the stack.

The PUSH instruction places the current PC value onto the stack. This increments the Stack Pointer and loads the current PC value onto the stack.

The POP instruction discards the current TOS by decrementing the Stack Pointer. The previous value pushed onto the stack then becomes the TOS value.

9.1.3.4 Fast Register Stack

There are three levels of fast stack registers available - one for CALL type instructions and two for interrupts. A fast register stack is provided for the STATUS, WREG and BSR registers, to provide a “fast return” option for interrupts. It is loaded with the current value of the corresponding register when the processor vectors for an interrupt. All interrupt sources will push values into the stack registers. The values in the registers are then loaded back into their associated registers if the RETFIE, FAST instruction is used to return from the interrupt. Refer to **“Call Shadow Register”** section for interrupt call shadow registers.

The following example shows a source code example that uses the Fast Register Stack during a subroutine call and return.

Example 9-1. Fast Register Stack Code Example

```
CALL SUB1, FAST  ;STATUS, WREG, BSR SAVED IN FAST REGISTER STACK
          •
          •
SUB1:
          •
          •
     RETURN, FAST     ;RESTORE VALUES SAVED IN FAST REGISTER STACK
```

9.1.4 Look-up Tables in Program Memory

There may be programming situations that require the creation of data structures, or look-up tables, in program memory. For PIC18 devices, look-up tables can be implemented in two ways:

- Computed GOTO
- Table Reads

9.1.4.1 Computed GOTO

A computed GOTO is accomplished by adding an offset to the Program Counter. An example is shown in the following code example.

A look-up table can be formed with an ADDWF PCL instruction and a group of RETLW *nn* instructions. The W register is loaded with an offset into the table before executing a call to that table. The first instruction of the called routine is the ADDWF PCL instruction. The next instruction executed will be one of the RETLW *nn* instructions that returns the value ‘nn’ to the calling function.

The offset value (in WREG) specifies the number of bytes that the Program Counter should advance and must be multiples of two (LSb = 0).

In this method, only one data byte may be stored in each instruction location and room on the return address stack is required.

Example 9-2. Computed GOTO Using an Offset Value

```
     RLNCF   OFFSET, W   ; W must be an even number, Max OFFSET = 127
     CALL    TABLE

     ORG     nn00h    ; 00 in LSByte ensures no addition overflow
TABLE:
     ADDWF   PCL      ; Add OFFSET to program counter
     RETLW   A        ; Value @ OFFSET=0
     RETLW   B        ; Value @ OFFSET=1
     RETLW   C        ; Value @ OFFSET=2
       .
       .
       .
```

9.1.4.2 Program Flash Memory Access

A more compact method of storing data in program memory allows two bytes of data to be stored in each instruction location.

Look-up table data may be stored two bytes per program word by using table reads and writes. The Table Pointer (TBLPTR) register specifies the byte address and the Table Latch (TABLAT) register contains the data that is read from or written to program memory. Data is transferred to or from program memory one byte at a time.

Table read and table write operations are discussed further in the **"Table Read Operations"** and **"Table Write Operations"** sections in the **"NVM - Nonvolatile Memory Module"** chapter.

9.2 Device Information Area

The Device Information Area (DIA) is a dedicated region in the program memory space. The DIA contains the calibration data for the internal temperature indicator module, the Microchip Unique Identifier words, and the Fixed Voltage Reference voltage readings measured in mV.

The complete DIA table is shown below, followed by a description of each region and its functionality. The data is mapped from 2C0000h to 2C003Fh. These locations are read-only and cannot be erased or modified. The data is programmed into the device during manufacturing.

Table 9-2. Device Information Area

Address Range	Name of Region	Standard Device Information
2C0000h-2C0011h	MUI0	Microchip Unique Identifier (9 Words)
	MUI1	
	MUI2	
	MUI3	
	MUI4	
	MUI5	
	MUI6	
	MUI7	
	MUI8	
2C0012h-2C0013h	MUI9	Reserved (1 Word)
2C0014h-2C0023h	EUI0	Optional External Unique Identifier (8 Words)
	EUI1	
	EUI2	
	EUI3	
	EUI4	
	EUI5	
	EUI6	
	EUI7	
2C0024h-2C0025h	TSLR1(1)	Gain $= \frac{0.1C \times 256}{count}$ (low range setting)
2C0026h-2C0027h	TSLR2(1)	Temperature indicator ADC reading at 90°C (low range setting)
2C0028h-2C0029h	TSLR3(1)	Offset (low range setting)
2C002Ah-2C002Bh	TSHR1(2)	Gain $= \frac{0.1C \times 256}{count}$ (high range setting)

.....continued

Address Range	Name of Region	Standard Device Information
2C002Ch-2C002Dh	TSHR2(2)	Temperature indicator ADC reading at 90°C (high range setting)
2C002Eh-2C002Fh	TSHR3(2)	Offset (high range setting)
2C0030h-2C0031h	FVRA1X	ADC FVR1 Output voltage for 1x setting (in mV)
2C0032h-2C0033h	FVRA2X	ADC FVR1 Output Voltage for 2x setting (in mV)
2C0034h-2C0035h	FVRA4X	ADC FVR1 Output Voltage for 4x setting (in mV)
2C0036h-2C0037h	FVRC1X	Comparator FVR2 output voltage for 1x setting (in mV)
2C0038h-2C0039h	FVRC2X	Comparator FVR2 output voltage for 2x setting (in mV)
2C003Ah-2C003Bh	FVRC4X	Comparator FVR2 output voltage for 4x setting (in mV)
2C003Ch-2C003Fh		Unassigned (2 Words)

Notes:

1. TSLR: Address 2C0024h-2C0029h store the measurements for the low range setting of the temperature sensor at V_{DD} = 3V, V_{REF}+ = 2.048V from FVR1.
2. TSHR: Address 2C002Ah-2C002Fh store the measurements for the high range setting of the temperature sensor at V_{DD} = 3V, V_{REF}+ = 2.048V from FVR1.

9.2.1 Microchip Unique Identifier (MUI)

This family of devices is individually encoded during final manufacturing with a Microchip Unique Identifier (MUI). The MUI cannot be user-erased. This feature allows for manufacturing traceability of Microchip Technology devices in applications where this is required. It may also be used by the application manufacturer for a number of functions that require unverified unique identification, such as:

- Tracking the device
- Unique serial number

The MUI is stored in read-only locations, located between 2C0000h to 2C0013h in the DIA space. The DIA table lists the addresses of the identifier words.

Important: For applications that require verified unique identification, contact your Microchip Technology sales office to create a Serialized Quick Turn Programming option.

9.2.2 External Unique Identifier (EUI)

The EUI data is stored at locations 2C0014h-2C0023h in the program memory region. This region is an optional space for placing application specific information. The data is coded per customer requirements during manufacturing. The EUI cannot be erased by a Bulk Erase command.

Important: Data is stored in this address range on receiving a request from the customer. The customer may contact the local sales representative or Field Applications Engineer, and provide them the unique identifier information that is required to be stored in this region.

9.2.3 Standard Parameters for the Temperature Sensor

The purpose of the temperature indicator module is to provide a temperature-dependent voltage that can be measured by an analog module. The DIA table contains standard parameters for the temperature sensor for low and high range. The values are measured during test and are unique to each device. The calibration data can be used to plot the approximate sensor output voltage, V_{TSENSE} vs. Temperature curve. The **"Temperature Indicator Module"** chapter explains the operation of the Temperature Indicator module and defines terms such as the low range and high range settings of the sensor.

9.2.4 Fixed Voltage Reference Data

The DIA stores measured FVR voltages for this device in mV for the different buffer settings of 1x, 2x or 4x at program memory locations. For more information on the FVR, refer to the **"FVR - Fixed Voltage Reference"** chapter.

9.3 Device Configuration Information

The Device Configuration Information (DCI) is a dedicated region in the program memory mapped from 3C0000h to 3C0009h. The data stored in these location is read-only and cannot be erased. Refer to the table below for the complete DCI table address and description. The DCI holds information about the device, which is useful for programming and Bootloader applications.

The erase size is the minimum erasable unit in the PFM, expressed as rows. The total device Flash memory capacity is (Erase size * Number of user-erasable pages).

Table 9-3. Device Configuration Information for PIC18-Q40 Devices

ADDRESS	NAME	DESCRIPTION	VALUE			UNITS
			PIC18F04/14Q40	PIC18F05/15Q40	PIC18F06/16Q40	
3C0000h-3C0001h	ERSIZ	Erase page size	128	128	128	Words
3C0002h-3C0003h	WLSIZ	Number of write latches per row	0	0	0	Words
3C0004h-3C0005h	URSIZ	Number of user-erasable pages	64	128	256	Pages
3C0006h-3C0007h	EESIZ	Data EEPROM memory size	512	512	512	Bytes
3C0008h-3C0009h	PCNT	Pin count	14/20	14/20	14/20	Pins

9.4 Data Memory Organization

Important: The operation of some aspects of data memory are changed when the PIC18 extended instruction set is enabled. See PIC18 Instruction Execution and the Extended Instruction Set for more information.

The data memory in PIC18 devices is implemented as static RAM. The memory space is divided into as many as 64 banks that contain 256 bytes each. The figure below shows the data memory organization for all devices in the device family.

The data memory contains Special Function Registers (SFRs) and General Purpose Registers (GPRs). The SFRs are used for control and status of the controller and peripheral functions, while GPRs are used for data storage and scratchpad operations in the user's application. Any read of an unimplemented location will read as '0'.

The value in the Bank Select Register (BSR) determines which bank is being accessed. The instruction set and architecture allow operations across all banks. The entire data memory may be accessed by Direct, Indirect or Indexed Addressing modes. Addressing modes are discussed later in this subsection.

To ensure that commonly used registers (SFRs and select GPRs) can be accessed in a single cycle, PIC18 devices implement an Access Bank. This is a virtual 256-byte memory space that provides fast access to SFRs and the top half of GPR Bank 5 without using the Bank Select Register. The Access Bank section provides a detailed description of the Access RAM.

Figure 9-3. Data Memory Map

BanK	BSR addr[13:8]	addr[7:0]	PIC18F		
			x4Q40	x5Q40	x6Q40
0	'b00 0000	0x00-0x5F			
1	'b00 0001	0x00-0xFF			
2	'b00 0010	0x00-0xFF			
3	'b00 0011	0x00-0xFF			
4	'b00 0100	0x00-0x5F			
	'b00 0100	0x60-0xFF			
5	'b00 0101	0x00-0x5F			
	'b00 0101	0x60-0xFF			
6	'b00 0110	0x00-0xFF			
7	'b00 0111	0x00-0xFF			
8	'b00 1000	0x00-0xFF			
9	'b00 1001	0x00-0xFF			
10	'b00 1010	0x00-0xFF			
11	'b00 1011	0x00-0xFF			
12	'b00 1100	0x00-0xFF			
13	'b00 1101	0x00-0xFF			
14	'b00 1110	0x00-0xFF			
15	'b00 1111	0x00-0xFF			
16	'b01 0000	0x00-0xFF			
17	'b01 0001	0x00-0xFF			
18	'b01 0010	0x00-0xFF			
19	'b01 0011	0x00-0xFF			
20	'b01 0100	0x00-0xFF			
21	'b01 0101	0x00-0xFF			
22	'b01 0110	0x00-0xFF			
23	'b01 0111	0x00-0xFF			
24	'b01 1000	0x00-0xFF			
25	'b01 1001	0x00-0xFF			
26	'b01 1010	0x00-0xFF			
27	'b01 1011	0x00-0xFF			
28	'b01 1100	0x00-0xFF			
29	'b01 1101	0x00-0xFF			
30	'b01 1110	0x00-0xFF			
31	'b01 1111	0x00-0xFF			
32	'b10 0000	0x00-0xFF			
33	'b10 0001	0x00-0xFF			
34	'b10 0010	0x00-0xFF			
35	'b10 0011	0x00-0xFF			
36	'b10 0100	0x00-0xFF			
37	'b10 0101	0x00-0xFF			
38	'b10 0110	0x00-0xFF			
to	–	-			
63	'b11 1111	0x00-0xFF			

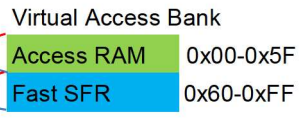

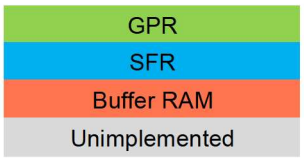

9.4.1 Bank Select Register

To rapidly access the RAM space in PIC18 devices, the memory is split using the banking scheme. This divides the memory space into contiguous banks of 256 bytes each. Depending on the instruction, each location can be addressed directly by its full address, or an 8-bit low-order address and a bank pointer.

Most instructions in the PIC18 instruction set make use of the bank pointer known as the Bank Select Register (BSR). This SFR holds the Most Significant bits of a location's address; the instruction itself includes the eight Least Significant bits. The BSR can be loaded directly by using the MOVLB instruction.

The value of the BSR indicates the bank in data memory being accessed; the eight bits in the instruction show the location in the bank and can be thought of as an offset from the bank's lower boundary. The relationship between the BSR's value and the bank division in data memory is shown in Figure 9-4.

When writing the firmware in assembly, the user must always be careful to ensure that the proper bank is selected before performing a data read or write. When using the C compiler to write the firmware, the BSR is tracked and maintained by the compiler.

While any bank can be selected, only those banks that are actually implemented can be read or written to. Writes to unimplemented banks are ignored, while reads from unimplemented banks will return '0'. Refer Figure 9-3 for a list of implemented banks.

Figure 9-4. Use of the Bank Select Register (Direct Addressing)

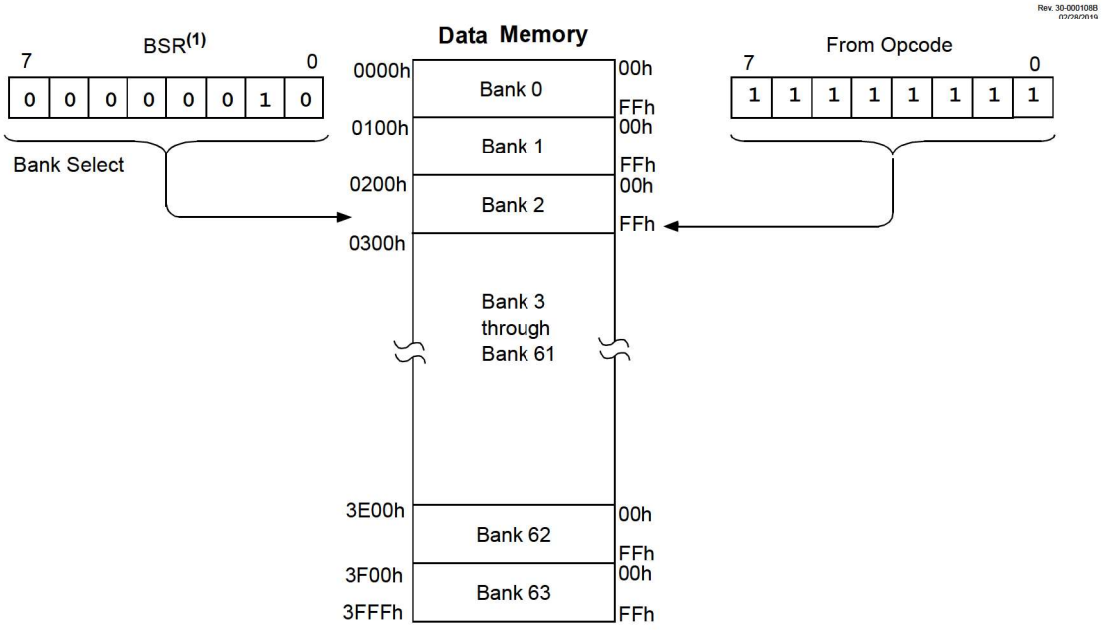

Note 1: The Access RAM bit of the instruction can be used to force an override of the selected bank (BSR value) to the registers of the Access Bank.

9.4.2 Access Bank

While the use of the BSR with an embedded 8-bit address allows users to address the entire range of data memory, it also means that the user must always ensure that the correct bank is selected. Otherwise, data may be read from or written to the wrong location. Verifying and/or changing the BSR for each read or write to data memory can become very inefficient.

To streamline access for the most commonly used data memory locations, the data memory is configured with a virtual Access Bank, which allows users to access a mapped block of memory without specifying a BSR. The Access Bank consists of the first 96 bytes of memory in Bank 5 (0500h-055Fh) and the last 160 bytes of memory in Bank 4 (0460h-04FFh). The upper half is known as the "Access RAM" and is composed of GPRs. The lower half is where the device's SFRs are mapped. These two areas are mapped contiguously as the virtual Access Bank and can be addressed in a linear fashion by an 8-bit address (see Data Memory Map).

The Access Bank is used by core PIC18 instructions that include the Access RAM bit (the 'a' parameter in the instruction). When 'a' is equal to '1', the instruction uses the BSR and the 8-bit address included in the opcode for the data memory address. When 'a' is '0', however, the instruction ignores the BSR and uses the Access Bank address map.

Using this "forced" addressing allows the instruction to operate on a data address in a single cycle, without updating the BSR first. Access RAM also allows for faster and more code efficient context saving and switching of variables.

The mapping of the Access Bank is slightly different when the extended instruction set is enabled ($\overline{\text{XINST}}$ Configuration bit = 1). This is discussed in more detail in the Mapping the Access Bank in Indexed Liberal Offset Mode section.

9.5 Data Addressing Modes

Important: The execution of some instructions in the core PIC18 instruction set are changed when the PIC18 extended instruction set is enabled. See Data Memory and the Extended Instruction Set for more information.

Information in the data memory space can be addressed in several ways. For most instructions, the Addressing mode is fixed. Other instructions may use up to three modes, depending on which operands are used and whether or not the extended instruction set is enabled.

The Addressing modes are:

- Inherent
- Literal
- Direct
- Indirect

An additional Addressing mode, Indexed Literal Offset, is available when the extended instruction set is enabled (XINST Configuration bit = 1). Its operation is discussed in greater detail in Indexed Addressing with Literal Offset.

9.5.1 Inherent and Literal Addressing

Many PIC18 control instructions do not need any argument at all; they either perform an operation that globally affects the device or they operate implicitly on one register. This Addressing mode is known as Inherent Addressing. Examples include SLEEP, RESET and DAW.

Other instructions work in a similar way but require an additional explicit argument in the opcode. This is known as Literal Addressing mode because they require some literal value as an argument. Examples include ADDLW and MOVLW, which respectively, add or move a literal value to the W register. Other examples include CALL and GOTO, which include a program memory address.

9.5.2 Direct Addressing

Direct Addressing specifies all or part of the source and/or destination address of the operation within the opcode itself. The options are specified by the arguments accompanying the instruction.

In the core PIC18 instruction set, bit-oriented and byte-oriented instructions use some version of Direct Addressing by default. All of these instructions include some 8-bit literal address as their Least Significant Byte. This address specifies either a register address in one of the banks of data RAM (see Data Memory Organization) or a location in the Access Bank (see Access Bank) as the data source for the instruction.

The Access RAM bit 'a' determines how the address is interpreted. When 'a' is '1', the contents of the BSR (see Bank Select Register) are used with the address to determine the complete 12-bit address of the register. When 'a' is '0', the address is interpreted as being a register in the Access Bank.

The destination of the operation's results is determined by the destination bit 'd'. When 'd' is '1', the results are stored back in the source register, overwriting its original contents. When 'd' is '0', the results are stored in the W register.

Instructions without the 'd' argument have a destination that is implicit in the instruction; their destination is either the target register being operated on or the W register.

9.5.3 Indirect Addressing

Indirect Addressing allows the user to access a location in data memory without giving a fixed address in the instruction. This is done by using File Select Registers (FSRs) as pointers to the locations which are to be read or written. Since the FSRs are themselves located in RAM as Special File Registers, they can also be directly manipulated under program control. This makes FSRs very useful in implementing data structures, such as tables and arrays in data memory.

The registers for Indirect Addressing are also implemented with Indirect File Operands (INDFs) that permit automatic manipulation of the pointer value with auto-incrementing, auto-decrementing or offsetting with another value. This allows for efficient code, using loops, such as the following example of clearing an entire RAM bank.

Example 9-3. How to Clear RAM (Bank 1) Using Indirect Addressing

```
     LFSR    FSR0,100h   ; Set FSR0 to beginning of Bank1
NEXT:
     CLRF    POSTINC0    ; Clear location in Bank1 then increment FSR0

     BTFSS   FSR0H,1     ; Has high FSR0 byte incremented to next bank?
     BRA     NEXT        ; NO, clear next byte in Bank1

CONTINUE:                ; YES, continue
```

9.5.3.1 FSR Registers and the INDF Operand

At the core of Indirect Addressing are three sets of registers: FSR0, FSR1 and FSR2. Each represent a pair of 8-bit registers, FSRnH and FSRnL. Each FSR pair holds the full address of the RAM location. The FSR value can address the entire range of the data memory in a linear fashion. The FSR register pairs, then, serve as pointers to data memory locations.

Indirect Addressing is accomplished with a set of Indirect File Operands, INDF0 through INDF2. These can be thought of as "virtual" registers; they are mapped in the SFR space but are not physically implemented. Reading or writing to a particular INDF register actually accesses its corresponding FSR register pair. A read from INDF1, for example, reads the data at the address indicated by FSR1H:FSR1L. Instructions that use the INDF registers as operands actually use the contents of their corresponding FSR as a pointer to the instruction's target. The INDF operand is just a convenient way of using the pointer.

Because Indirect Addressing uses a full address, the FSR value can target any location in any bank regardless of the BSR value. However, the Access RAM bit must be cleared to zero to ensure that the INDF register in Access space is the object of the operation instead of a register in one of the other banks. The assembler default value for the Access RAM bit is zero when targeting any of the indirect operands.

9.5.3.2 FSR Registers and POSTINC, POSTDEC, PREINC and PLUSW

In addition to the INDF operand, each FSR register pair also has four additional indirect operands. Like INDF, these are "virtual" registers that cannot be directly read or written. Accessing these registers actually accesses the location to which the associated FSR register pair points, and also performs a specific action on the FSR value. They are:

- POSTDEC: accesses the location to which the FSR points, then automatically decrements the FSR by 1 afterwards
- POSTINC: accesses the location to which the FSR points, then automatically increments the FSR by 1 afterwards
- PREINC: automatically increments the FSR by one, then uses the location to which the FSR points in the operation
- PLUSW: adds the signed value of the W register (range of -127 to 128) to that of the FSR and uses the location to which the result points in the operation.

In this context, accessing an INDF register uses the value in the associated FSR register without changing it. Similarly, accessing a PLUSW register gives the FSR value an offset by that in the W register; however, neither W nor the FSR is actually changed in the operation. Accessing the other virtual registers changes the value of the FSR register.

Figure 9-5. Indirect Addressing

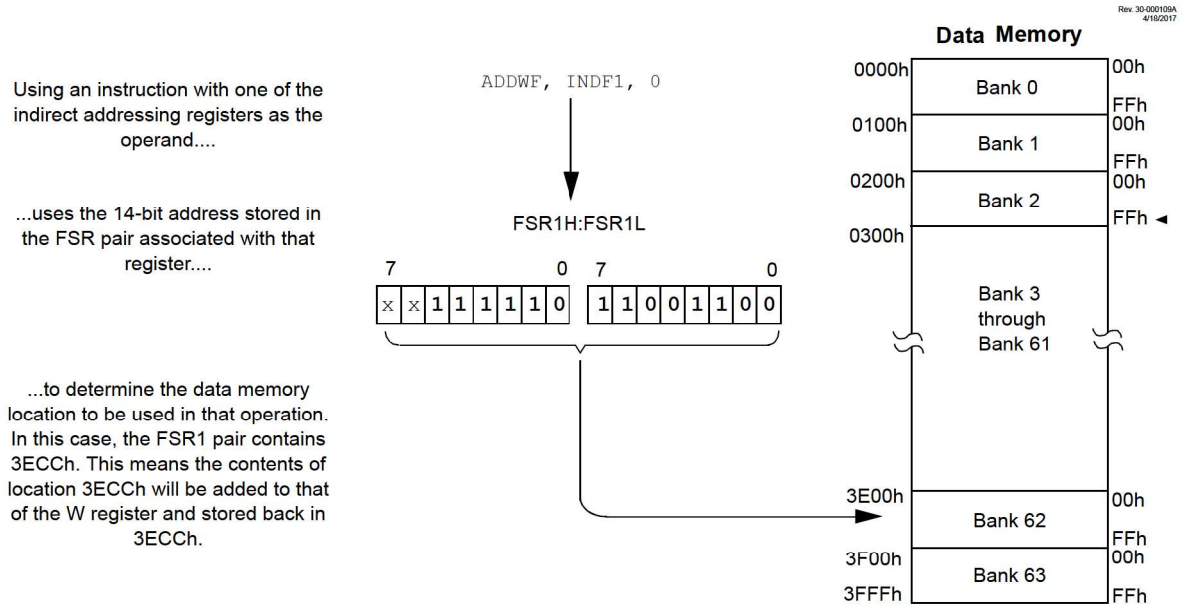

Operations on the FSRs with POSTDEC, POSTINC and PREINC affect the entire register pair; that is, rollovers of the FSRnL register from FFh to 00h carry over to the FSRnH register. On the other hand, results of these operations do not change the value of any flags in the STATUS register (e.g., Z, N, OV, etc.).

The PLUSW register can be used to implement a form of Indexed Addressing in the data memory space. By manipulating the value in the W register, users can reach addresses that are fixed offsets from pointer addresses. In some applications, this can be used to implement some powerful program control structure, such as software stacks, inside of data memory.

9.5.3.3 Operations by FSRs on FSRs

Indirect Addressing operations that target other FSRs or virtual registers represent special cases. For example, using an FSR to point to one of the virtual registers will not result in successful operations. As a specific case, assume that FSR0H:FSR0L contains the address of INDF1. Attempts to read the value of the INDF1 using INDF0 as an operand will return 00h. Attempts to write to INDF1 using INDF0 as the operand will result in a `NOP`.

On the other hand, using the virtual registers to write to an FSR pair may not occur as planned. In these cases, the value will be written to the FSR pair but without any incrementing or decrementing. Thus, writing to either the INDF2 or POSTDEC2 register will write the same value to the FSR2H:FSR2L.

Since the FSRs are physical registers mapped in the SFR space, they can be manipulated through all direct operations. Users should proceed cautiously when working on these registers, particularly if their code uses Indirect Addressing.

Similarly, operations by Indirect Addressing are generally permitted on all other SFRs. Users should exercise the appropriate caution that they do not inadvertently change settings that might affect the operation of the device.

9.6 Data Memory and the Extended Instruction Set

Enabling the PIC18 extended instruction set ($\overline{\text{XINST}}$ Configuration bit = `1`) significantly changes certain aspects of data memory and its addressing. Specifically, the use of the Access Bank for many of the core PIC18 instructions is different; this is due to the introduction of a new Addressing mode for the data memory space.

What does not change is just as important. The size of the data memory space is unchanged, as well as its linear addressing. The SFR map remains the same. Core PIC18 instructions can still operate in both Direct and Indirect

Addressing mode; inherent and literal instructions do not change at all. Indirect addressing with FSR0 and FSR1 also remain unchanged.

9.6.1 Indexed Addressing with Literal Offset

Enabling the PIC18 extended instruction set changes the behavior of Indirect Addressing using the FSR2 register pair within Access RAM. Under the proper conditions, instructions that use the Access Bank – that is, most bit-oriented and byte-oriented instructions – can invoke a form of Indexed Addressing using an offset specified in the instruction. This special Addressing mode is known as Indexed Addressing with Literal Offset, or Indexed Literal Offset mode.

When using the extended instruction set, this Addressing mode requires the following:

- The use of the Access Bank is forced (‘a’ = 0) and
- The file address argument is less than or equal to 5Fh.

Under these conditions, the file address of the instruction is not interpreted as the lower byte of an address (used with the BSR in Direct Addressing), or as an 8-bit address in the Access Bank. Instead, the value is interpreted as an offset value to an Address Pointer, specified by FSR2. The offset and the contents of FSR2 are added to obtain the target address of the operation.

9.6.2 Instructions Affected by Indexed Literal Offset Mode

Any of the core PIC18 instructions that can use Direct Addressing are potentially affected by the Indexed Literal Offset Addressing mode. This includes all byte-oriented and bit-oriented instructions, or almost one-half of the standard PIC18 instruction set. Instructions that only use Inherent or Literal Addressing modes are unaffected.

Additionally, byte-oriented and bit-oriented instructions are not affected if they do not use the Access Bank (Access RAM bit is ‘1’), or include a file address of 60h or above. Instructions meeting these criteria will continue to execute as before. A comparison of the different possible Addressing modes when the extended instruction set is enabled is shown in the following figure.

Those who desire to use byte-oriented or bit-oriented instructions in the Indexed Literal Offset mode should note the changes to assembler syntax for this mode. This is described in more detail in the **“Extended Instruction Syntax”** section.

Figure 9-6. Comparing Addressing Options for Bit-Oriented and Byte-Oriented Instructions (Extended Instruction Set Enabled)

EXAMPLE INSTRUCTION: `ADDWF, f, d, a` (Opcode: `0010 01da ffff ffff`)

When 'a' = 0 and f ≥ 60h

The instruction executes in Direct Forced mode. 'f' is interpreted as a location in the Access RAM between 060h and 0FFh. This is the same as locations 460h to 4FFh (Bank4) of data memory. Locations below 60h are not available in this addressing mode.

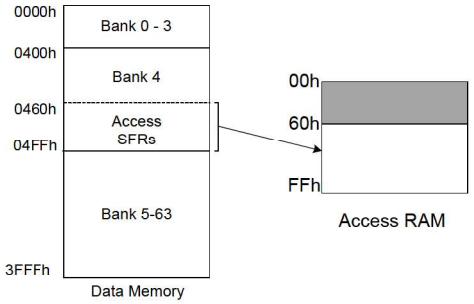

When 'a' = 0 and f ≤ 5Fh

The instruction executes in Indexed Literal Offset mode. 'f' is interpreted as an offset to the address value in FSR2. The two are added together to obtain the address of the target register for the instruction. The address can be anywhere in the data memory space.

Note that in this mode, the correct syntax is now:

`ADDWF [k], d`

where 'k' is the same as 'f'.

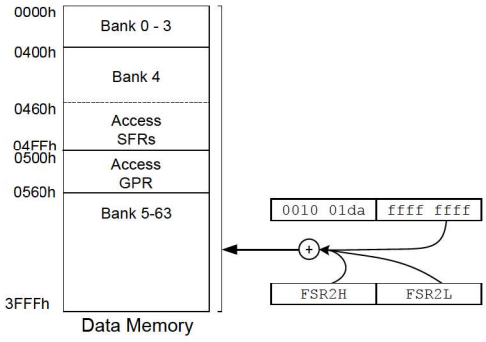

When 'a' = 1 (all values of f)

The instruction executes in Direct mode (also known as Direct Long mode). 'f' is interpreted as a location in one of the 63 banks of the data memory space. The bank is designated by the Bank Select Register (BSR). The address can be in any implemented bank in the data memory space.

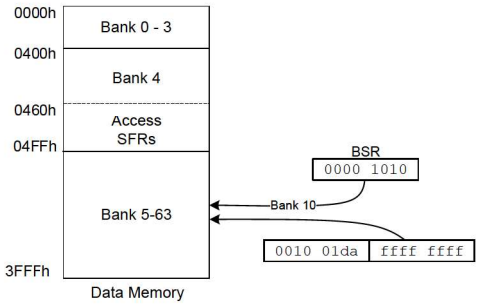

9.6.3 Mapping the Access Bank in Indexed Literal Offset Mode

The use of Indexed Literal Offset Addressing mode effectively changes how the first 96 locations of Access RAM (00h to 5Fh) are mapped. Rather than containing just the contents of the top section of Bank 5, this mode maps the contents from a user defined "window" that can be located anywhere in the data memory space. The value of FSR2 establishes the lower boundary of the addresses mapped into the window, while the upper boundary is defined by FSR2 plus 95 (5Fh). Addresses in the Access RAM above 5Fh are mapped as previously described (see Access Bank). An example of Access Bank remapping in this Addressing mode is shown in the following figure.

Figure 9-7. Remapping the Access Bank with Indexed Literal Offset Addressing

EXAMPLE:
`ADDWF, f, d, a`
FSR2H:FSR2L = `0x0A20`

Locations in the region from the FSR2 pointer (A20h) to the pointer plus 05Fh (A7Fh) are mapped to the Access RAM (000h-05Fh). Special File Registers at 460h through 4FFh are mapped to 60h through FFh, as usual. Bank 4 addresses below 5Fh can still be addressed by using the BSR.

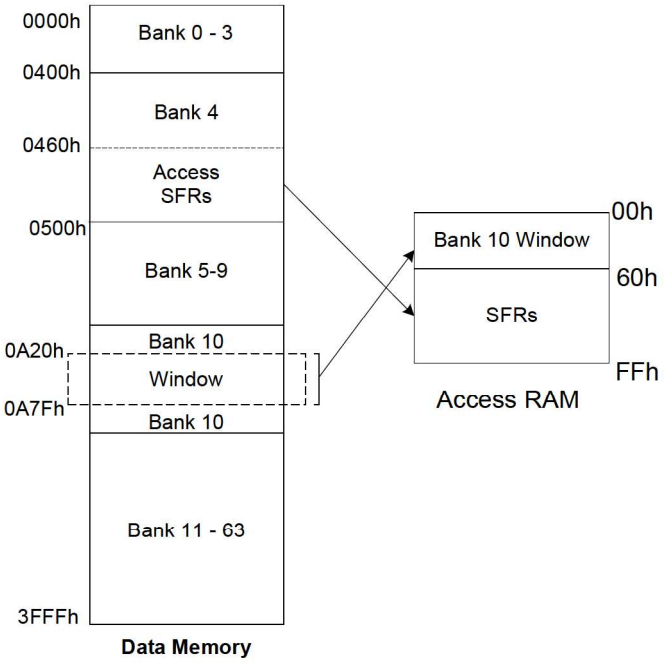

Remapping of the Access Bank applies only to operations using the Indexed Literal Offset mode. Operations that use the BSR (Access RAM bit is '1') will continue to use Direct Addressing as before.

9.6.4 PIC18 Instruction Execution and the Extended Instruction Set

Enabling the extended instruction set adds additional commands to the existing PIC18 instruction set. These instructions are executed as described in the **"Extended Instruction Set"** section.

9.7 Register Definitions: Memory Organization

9.7.1 PCL

Name: PCL
Address: 0x4F9

Low byte of the Program Counter Register

Bit	7	6	5	4	3	2	1	0
	PCL[7:0]							
Access	R/W	R/W	R/W	R/W	R/W	R/W	R/W	R/W
Reset	0	0	0	0	0	0	0	0

Bits 7:0 – PCL[7:0] Provides direct read and write access to the Program Counter

9.7.2 PCLAT

Name: PCLAT
Address: 0x4FA

Program Counter Latches

Holding register for bits [21:9] of the Program Counter (PC). Reads of the PCL register transfer the upper PC bits to the PCLAT register. Writes to PCL register transfer the PCLAT value to the PC.

Bit	15	14	13	12	11	10	9	8
				PCLATU[4:0]				
Access				R/W	R/W	R/W	R/W	R/W
Reset				0	0	0	0	0

Bit	7	6	5	4	3	2	1	0
	PCLATH[7:0]							
Access	R/W	R/W	R/W	R/W	R/W	R/W	R/W	R/W
Reset	0	0	0	0	0	0	0	0

Bits 12:8 – PCLATU[4:0] Upper PC Latch Register
Holding register for Program Counter [21:17]

Bits 7:0 – PCLATH[7:0] High PC Latch Register
Holding register for Program Counter [16:8]

9.7.3 TOS

Name: TOS
Address: 0x4FD

Top-of-Stack Register

Contents of the stack pointed to by the STKPTR register. This is the value that will be loaded into the Program Counter upon a `RETURN` or `RETFIE` instruction.

Bit	23	22	21	20	19	18	17	16
				TOS[20:16]				
Access				R/W	R/W	R/W	R/W	R/W
Reset				0	0	0	0	0

Bit	15	14	13	12	11	10	9	8
	TOS[15:8]							
Access	R/W	R/W	R/W	R/W	R/W	R/W	R/W	R/W
Reset	0	0	0	0	0	0	0	0

Bit	7	6	5	4	3	2	1	0
	TOS[7:0]							
Access	R/W	R/W	R/W	R/W	R/W	R/W	R/W	R/W
Reset	0	0	0	0	0	0	0	0

Bits 20:0 – TOS[20:0] Top-of-Stack

Notes: The individual bytes in this multi-byte register can be accessed with the following register names:

- TOSU: Accesses the upper byte TOS[20:16]
- TOSH: Accesses the high byte TOS[15:8]
- TOSL: Accesses the low byte TOS[7:0]

9.7.4 STKPTR

Name: STKPTR
Address: 0x4FC

Stack Pointer Register

Bit	7	6	5	4	3	2	1	0
		STKPTR[6:0]						
Access		R/W	R/W	R/W	R/W	R/W	R/W	R/W
Reset		0	0	0	0	0	0	0

Bits 6:0 – STKPTR[6:0] Stack Pointer Location

9.7.5 WREG

Name: WREG
Address: 0x4E8

Working Data Register

Bit	7	6	5	4	3	2	1	0
	WREG[7:0]							
Access	R/W	R/W	R/W	R/W	R/W	R/W	R/W	R/W
Reset	x	x	x	x	x	x	x	x

Bits 7:0 – WREG[7:0]

9.7.6 INDF

Name: INDFx
Address: 0x4EF,0x4E7,0x4DF

Indirect Data Register

This is a virtual register. The GPR/SFR register addressed by the FSRx register is the target for all operations involving the INDFx register.

Bit	7	6	5	4	3	2	1	0
	INDF[7:0]							
Access	R/W	R/W	R/W	R/W	R/W	R/W	R/W	R/W
Reset	0	0	0	0	0	0	0	0

Bits 7:0 – INDF[7:0] Indirect data pointed to by the FSRx register

9.7.7 POSTDEC

Name: POSTDECx
Address: 0x4ED,0x4E5,0x4DD

Indirect Data Register with post decrement

This is a virtual register. The GPR/SFR register addressed by the FSRx register is the target for all operations involving the POSTDECx register. FSRx is decrememted after the read or write operation.

Bit	7	6	5	4	3	2	1	0
	POSTDEC[7:0]							
Access	R/W	R/W	R/W	R/W	R/W	R/W	R/W	R/W
Reset	0	0	0	0	0	0	0	0

Bits 7:0 – POSTDEC[7:0]

9.7.8 POSTINC

Name: POSTINCx
Address: 0x4EE,0x4E6,0x4DE

Indirect Data Register with post increment

This is a virtual register. The GPR/SFR register addressed by the FSRx register is the target for all operations involving the POSTINCx register. FSRx is incremented after the read or write operation.

Bit	7	6	5	4	3	2	1	0
	POSTINC[7:0]							
Access	R/W	R/W	R/W	R/W	R/W	R/W	R/W	R/W
Reset	0	0	0	0	0	0	0	0

Bits 7:0 – POSTINC[7:0]

9.7.9 PREINC

Name: PREINCx
Address: 0x4EC,0x4E4,0x4DC

Indirect Data Register with pre-increment

This is a virtual register. The GPR/SFR register addressed by the FSRx register plus 1 is the target for all operations involving the PREINCx register. FSRx is incremented before the read or write operation.

Bit	7	6	5	4	3	2	1	0
	PREINC[7:0]							
Access	R/W	R/W	R/W	R/W	R/W	R/W	R/W	R/W
Reset	0	0	0	0	0	0	0	0

Bits 7:0 – PREINC[7:0]

9.7.10 PLUSW

Name: PLUSWx
Address: 0x4EB,0x4E3,0x4DB

Indirect Data Register with WREG offset

This is a virtual register. The GPR/SFR register addressed by the sum of the FSRx register plus the signed value of the W register is the target for all operations involving the PLUSWx register.

Bit	7	6	5	4	3	2	1	0
	PLUSW[7:0]							
Access	R/W	R/W	R/W	R/W	R/W	R/W	R/W	R/W
Reset	0	0	0	0	0	0	0	0

Bits 7:0 – PLUSW[7:0]

9.7.11 FSR

Name: FSRx
Address: 0x4E9,0x4E1,0x4D9

Indirect Address Register

The FSR value is the address of the data to which the INDF register points.

Bit	15	14	13	12	11	10	9	8
			FSRH[5:0]					
Access			R/W	R/W	R/W	R/W	R/W	R/W
Reset			0	0	0	0	0	0

Bit	7	6	5	4	3	2	1	0
	FSRL[7:0]							
Access	R/W	R/W	R/W	R/W	R/W	R/W	R/W	R/W
Reset	0	0	0	0	0	0	0	0

Bits 13:8 – FSRH[5:0] Most Significant address of INDF data

Bits 7:0 – FSRL[7:0] Least Significant address of INDF data

9.7.12 BSR

Name: BSR
Address: 0x4E0

Bank Select Register

The BSR indicates the data memory bank of the GPR address.

Bit	7	6	5	4	3	2	1	0
			BSR[5:0]					
Access			R/W	R/W	R/W	R/W	R/W	R/W
Reset			0	0	0	0	0	0

Bits 5:0 – BSR[5:0] Most Significant bits of the data memory address

9.8 Register Summary - Memory Organization

Address	Name	Bit Pos.	7	6	5	4	3	2	1	0
0x00 ... 0x04D8	Reserved									
0x04D9	FSR2	7:0	FSRL[7:0]							
		15:8			FSRH[5:0]					
0x04DB	PLUSW2	7:0	PLUSW[7:0]							
0x04DC	PREINC2	7:0	PREINC[7:0]							
0x04DD	POSTDEC2	7:0	POSTDEC[7:0]							
0x04DE	POSTINC2	7:0	POSTINC[7:0]							
0x04DF	INDF2	7:0	INDF[7:0]							
0x04E0	BSR	7:0			BSR[5:0]					
0x04E1	FSR1	7:0	FSRL[7:0]							
		15:8			FSRH[5:0]					
0x04E3	PLUSW1	7:0	PLUSW[7:0]							
0x04E4	PREINC1	7:0	PREINC[7:0]							
0x04E5	POSTDEC1	7:0	POSTDEC[7:0]							
0x04E6	POSTINC1	7:0	POSTINC[7:0]							
0x04E7	INDF1	7:0	INDF[7:0]							
0x04E8	WREG	7:0	WREG[7:0]							
0x04E9	FSR0	7:0	FSRL[7:0]							
		15:8			FSRH[5:0]					
0x04EB	PLUSW0	7:0	PLUSW[7:0]							
0x04EC	PREINC0	7:0	PREINC[7:0]							
0x04ED	POSTDEC0	7:0	POSTDEC[7:0]							
0x04EE	POSTINC0	7:0	POSTINC[7:0]							
0x04EF	INDF0	7:0	INDF[7:0]							
0x04F0 ... 0x04F8	Reserved									
0x04F9	PCL	7:0	PCL[7:0]							
0x04FA	PCLAT	7:0	PCLATH[7:0]							
		15:8				PCLATU[4:0]				
0x04FC	STKPTR	7:0		STKPTR[6:0]						
0x04FD	TOS	7:0	TOS[7:0]							
		15:8	TOS[15:8]							
		23:16				TOS[20:16]				

10. NVM - Nonvolatile Memory Module

The Nonvolatile Memory (NVM) module provides run-time read and write access to Program Flash Memory (PFM), Data Flash Memory (DFM) and Configuration bits. PFM includes the program memory and user ID space. DFM is also referred to as EEPROM because it is written one byte at a time and the erase before write is automatic.

The Table Pointer provides read-only access to PFM, DFM and Configuration bits. The NVM controls provide both read and write access to PFM, DFM and Configuration bits.

Reads from and writes to the DFM are limited to single byte operations whereas those for PFM are 16-bit word or 128-word page operations. The page buffer memory occupies one full bank of RAM space located in the RAM bank following the last occupied GPR bank.

The registers used for control, address, and data are as follows:

- NVMCON0 - Operation start and active status
- NVMCON1 - Operation type and error status
- NVMLOCK - Write-only register to guard against accidental writes
- NVMADR - Read/write target address (multi-byte register)
- NVMDAT - Read/write target data (multi-byte register)
- TBLPTR - Table Pointer PFM target address for reads and buffer RAM address for writes (multi-byte register)
- TABLAT - Table Pointer read/write target data (single byte register)

The write and erase times are controlled by an on-chip timer. The write and erase voltages are generated by an on-chip charge pump rated to function over the operating voltage range of the device.

PFM and DFM can be protected in two ways: code protection and write protection. Code protection (Configuration bit $\overline{CP}$) disables read and write access through an external device programmer. Write protection prevents writes to NVM areas tagged for protection by the $\overline{WRTn}$ Configuration bits. Code protection does not affect the self-write and erase functionality whereas write protection does. Attempts to write a protected location will set the WRERR bit. Code protection and write protection can only be reset by a Bulk Erase performed by an external device programmer.

The Bulk Erase command is used to completely erase different memory regions. The area to be erased is selected using a bit field combination. The Bulk Erase command can only be issued through an external programmer. There is no run time access for this command.

If the device is code-protected and a Bulk Erase command for the configuration memory is issued, all other memory regions are also erased. Refer to the "***PIC18-Q40 Family Programming Specifications***" for more details.

10.1 Operations

NVM write operations are controlled by selecting the desired action with the NVMCMD bits and then starting the operation by executing the unlock sequence. NVM read operations are started by setting the GO bit after setting the read operation. Available NVM operations are shown in the following table.

Table 10-1. NVM Operations

NVMCMD	Unlock	Operation	DFM	PFM	Source/Destination	WRERR	INT
000	No	Read	byte	word	NVM to NVMDAT	No	No
001	No	Read and Post Increment	byte	word	NVM to NVMDAT	No	No
010	No	Read Page	—	page	NVM to Buffer RAM	No	No
011	Yes	Write	byte	word	NVMDAT to NVM	Yes	Yes
100	Yes	Write and Post Increment	byte	word	NVMDAT to NVM	Yes	Yes
101	Yes	Write Page	—	page	Buffer RAM to NVM	Yes	Yes
110	Yes	Erase Page	—	page	n/a	Yes	Yes
111	No	Reserved (No Operation)	—	—	—	No	No

Important: When the GO bit is set, writes operations are blocked on all NVM registers. The GO bit is cleared by hardware when the operation is complete. The GO bit cannot be cleared by software.

10.2 Unlock Sequence

As an extra layer of protection against memory corruption, a specific code execution unlock sequence is required to initiate a write or erase operation. Both C and assembly examples are shown below. All interrupts should be disabled before starting the unlock sequence to ensure proper execution.

Example 10-1. Unlock sequence in C

```
NVMLOCK = 0x55;
NVMLOCK = 0xAA;
NVMCON0bits.GO = 1;
```

Example 10-2. Unlock sequence in assembly

```
movlw    0x55
movwf    NVMLOCK
movlw    0xAA
movwf    NVMLOCK
bsf      NVMCON0,GO
```

10.3 Program Flash Memory (PFM)

The Program Flash Memory is readable, writable, and erasable during normal operation over the entire V_{DD} range.

A read from program memory is executed either one word, one byte, or a 128-word page at a time. A program memory erase is executed on a 128-word page at a time. A Bulk Erase operation cannot be issued from user code. A write to program memory can be executed as either 1 or 128 words at a time.

Writing or erasing program memory will cease instruction fetches until the operation is complete. The program memory cannot be accessed during the write or erase, therefore, code cannot execute. An internal programming timer controls the write time of program memory writes and erases.

A value written to program memory does not need to be a valid instruction. Executing a program memory location that forms an invalid instruction results in a NOP.

It is important to understand the PFM memory structure for erase and programming operations. Program memory word size is 16 bits wide. A 128-word PFM page is the only size that can be erased by user software.

After a page has been erased, all or a portion of this page can be programmed. Data can be written directly into PFM one 16-bit word at a time using the NVMADR, NVMDAT, and NVMCON1 controls or as a full page from the buffer RAM. The buffer RAM is directly accessible as any other SFR/GPR register and also may be loaded via sequential writes using the TABLAT and TBLPTR registers.

Important: To modify only a portion of a previously programmed page, the contents of the entire page must be read and saved in the buffer RAM prior to the page erase. The Read Page operation is the easiest way to do this. Then, the page should be erased so that the new data can be written into the buffer RAM to reprogram the page of PFM. However, any unprogrammed locations can be written using the single word Write operation without first erasing the page.

10.3.1 Page Erase

The erase size is always 128 words. Only through the use of an external programmer can larger areas of program memory be Bulk Erased. Word erase in the program memory is not supported.

When initiating an erase sequence from user code, a page of 128 words of program memory is erased. The NVMADR[21:8] bits point to the page being erased. The NVMADR[7:0] bits are ignored. The NVMCON0 and NVMCON1 registers command the erase operation. The NVMCMD bits are set to select the erase operation. The GO bit is set to initiate the erase operation as the last step in the unlock sequence.

The NVM unlock sequence described in the Unlock Sequence section must be used; this guards against accidental writes. Instruction execution is halted during the erase cycle. The erase cycle is terminated by the internal programming timer.

The sequence of events for erasing a page of PFM is:

1. Set the NVMADR registers to an address within the intended page.
2. Set the NVMCMD control bits to `'b110` (Page Erase).
3. Disable all interrupts.
4. Perform the unlock sequence as described in the Unlock Sequence section.
5. Set the GO bit to start the PFM page erase.
6. Monitor the GO bit or NVMIF interrupt flag to determine when the erase has completed.
7. Interrupts can be enabled after the GO bit is clear.
8. Set the NVMCMD control bits to `'b000`.

If the PFM address is write-protected, the GO bit will be cleared, the erase operation will not take place, and the WRERR bit will be set.

While erasing the PFM page, the CPU operation is suspended and then resumes when the operation is complete. Upon erase completion, the GO bit is cleared in hardware, the NVMIF is set, and an interrupt will occur (if the NVMIE bit is set and interrupts are enabled).

The buffer RAM data are not affected by erase operations and the NVMCMD bits will remain unchanged throughout the erase opeation.

Figure 10-1. PFM Page Erase Flowchart

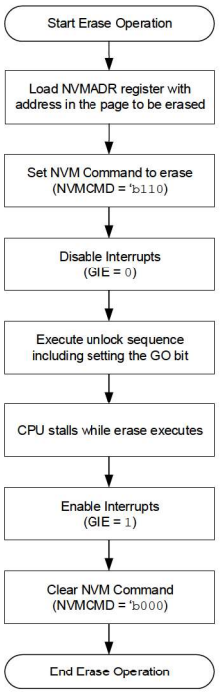

Example 10-3. Erasing a page of Program Flash Memory in C

```
// Code sequence to erase one page of PFM
// PFM target address is specified by PAGE_ADDR

// Save interrupt enable bit value
uint8_t GIEBitValue = INTCON0bits.GIE;

// Load NVMADR with the base address of the memory page
NVMADR = PAGE_ADDR;
NVMCON1bits.CMD = 0x06;            // Set the page erase command
INTCON0bits.GIE = 0;               // Disable interrupts
//---------- Required Unlock Sequence ----------
NVMLOCK = 0x55;
NVMLOCK = 0xAA;
NVMCON0bits.GO = 1;                // Start page erase
//-----------------------------------------------
while (NVMCON0bits.GO);            // Wait for the erase operation to complete
// Verify erase operation success and call the recovery function if needed
if (NVMCON1bits.WRERR){
   ERASE_FAULT_RECOVERY();
}

INTCON0bits.GIE = GIEBitValue;     // Restore interrupt enable bit value
NVMCON1bits.CMD = 0x00;            // Disable writes to memory
```

Important:

- If a write or erase operation is terminated by an unexpected reset, the WRERR bit will be set and the user can check to decide whether a rewrite of the location(s) is needed.
- If a write or erase operation is attempted on a write-protected area, the WRERR bit will be set.
- If a write or erase operation is attempted on an invalid address location, the WRERR bit is set. (Refer to the Program and Data Memory Map in the **"Memory Organization"** chapter for more information on valid address locations.)

10.3.2 Page Read

PFM can be read one word or 128-word page at a time. A page is read by setting the NVMADR to the an address within the target page and setting the NVMCMD bits to `'b010`. The page content is then transferred from PFM to the Buffer Ram by starting the read operation.

The sequence of events for reading a 128-word page of PFM is:

1. Set the NVMADR registers to an address within the intended page.
2. Set the NVMCMD control bits to `'b010` (Page Read).
3. Set the GO bit to start the PFM page read.
4. Monitor the GO bit or NVMIF interrupt flag to determine when the read has completed.

Example 10-4. Reading a Page of Program Flash Memory in C

```
// Code sequence to read one page of PFM to Buffer Ram
// PFM target address is specified by PAGE_ADDR

// Load NVMADR with the base address of the memory page
NVMADR = PAGE_ADDR;

NVMCON1bits.CMD = 0x02;            // Set the page read command
NVMCON0bits.GO = 1;                // Start page read
while (NVMCON0bits.GO);            // Wait for the read operation to complete
```

10.3.3 Word Read

A single word is read by setting the NVMADR to the target address and setting the NVMCMD bits to 'b000. The word is then transferred from PFM to the NVMDAT registers by starting the read operation.

The sequence of events for reading a word of PFM is:

1. Set the NVMADR registers to the target address.
2. Set the NVMCMD control bits to 'b000 (Word Read).
3. Set the GO bit to start the PFM word read.
4. Monitor the GO bit or NVMIF interrupt flag to determine when the read has completed.

Example 10-5. Reading a Word from Program Flash Memory in C

```
// Code sequence to read one word from PFM
// PFM target address is specified by WORD_ADDR

// Variable to store the word value from desired location in PFM
uint16_t WordValue;

// Load NVMADR with the desired word address
NVMADR = WORD_ADDR;
NVMCON1bits.CMD = 0x00;          // Set the word read command
NVMCON0bits.GO = 1;              // Start word read
while (NVMCON0bits.GO);          // Wait for the read operation to complete
WordValue = NVMDAT;              // Store the read value to a variable
```

10.3.4 Page Write

A page is written by first loading the buffer registers in the buffer RAM. All buffer registers are then written to PFM by setting the NVMADR to an address within the intended address range of the target PFM page, setting the NVMCMD bits to 'b101, and then executing the unlock sequence and setting the GO bit.

If the PFM address in the NVMADR is write-protected, or if NVMADR points to an invalid location, the GO bit is cleared without any effect and the WRERR bit is set.

CPU operation is suspended during a page write cycle and resumes when the operation is complete. The page write operation completes in one extended instruction cycle. When complete, the GO bit is cleared by hardware and NVMIF is set. An interrupt will occur if NVMIE is also set. The buffer registers and NVMCMD bits are not changed throughout the write operation.

The internal programming timer controls the write time. The write/erase voltages are generated by an on-chip charge pump and rated to operate over the voltage range of the device.

Important: Individual bytes of program memory may be modified, provided that the modification does not attempt to change any NVM bit from a '0' to a '1'. When modifying individual bytes with a page write operation, it is necessary to load all buffer registers with either 0xFF or the existing contents of memory before executing a page write operation. The fastest way to do this is by performing a page read operation.

In this device a PFM page is 128 words (256 bytes). This is the same size as one bank of general purpose RAM (GPR). This area of GPR space is dedicated as a buffer area for NVM page operations. The buffer areas for each device in the family are shown in the following table:

Table 10-2. NVM Buffer Banks

Device	GPR Bank Number
PIC18Fx6Q40	21
PIC18Fx5Q40	13
PIC18Fx4Q40	9

There are several ways to address the data in the GPR buffer space:

- Using the TBLRD and TBLWT instructions
- Using the indirect FSR registers
- Direct read and writes to specific GPR locations

Neglecting the bank select bits, the 8 address bits of the GPR buffer space correspond to the 8 LSbs of each PFM page. In other words, there is a one-to-one correspondence between the NVMADRL register and the FSRxL register, where the x in FSRx is 0, 1 or 2.

The sequence of events for programming a page of PFM is:

1. Set the NVMADR registers to an address within the intended page.
2. Set the NVMCMD to 'b110 (Erase Page).
3. Disable all interrupts.
4. Perform the unlock sequence as described in the Unlock Sequence section.
5. Set the GO bit to start the PFM page erase.
6. Monitor the GO bit or NVMIF interrupt flag to determine when the erase has completed.
7. Set NVMCMD to 'b101 (Page Write).
8. Perform the unlock sequence.
9. Set the GO bit to start the PFM page write.
10. Monitor the GO bit or NVMIF interrupt flag to determine when the write has completed.
11. Interrupts can be enabled after the GO bit is clear.
12. Set the NVMCMD control bits to 'b000.

Example 10-6. Writing a Page of Program Flash Memory in C

```
// Code sequence to write a page of PFM
// Input[] is the user data that needs to be written to PFM
// PFM target address is specified by PAGE_ADDR

#define PAGESIZE 128                // PFM page size

// Save Interrupt Enable bit Value
uint8_t GIEBitValue = INTCON0bits.GIE;

// The BufferRAMStartAddr will be changed based on the device, refer
// to the "Memory Organization" chapter for more detail
uint16_t bufferRAM __at(BufferRAMStartAddr);

// Defining a pointer to the first location of the Buffer RAM
uint16_t *bufferRamPtr = (uint16_t*) & bufferRAM;

//Copy application buffer contents to the Buffer RAM
for (uint8_t i = 0; i < PAGESIZE; i++) {
    *bufferRamPtr++ = Input[i];
}

// Load NVMADR with the base address of the memory page
NVMADR = PAGE_ADDR;
NVMCON1bits.CMD = 0x06;             // Set the page erase command
INTCON0bits.GIE = 0;                // Disable interrupts
//---------- Required Unlock Sequence ----------
NVMLOCK = 0x55;
NVMLOCK = 0xAA;
NVMCON0bits.GO = 1;                 // Start page erase
//-----------------------------------------------
while (NVMCON0bits.GO);             // Wait for the erase operation to complete
// Verify erase operation success and call the recovery function if needed
if (NVMCON1bits.WRERR){
   ERASE_FAULT_RECOVERY();
}

// NVMADR is already pointing to target page
NVMCON1bits.CMD = 0x05;             // Set the page write command
//---------- Required Unlock Sequence ----------
NVMLOCK = 0x55;
NVMLOCK = 0xAA;
```

```
NVMCON0bits.GO = 1;                 // Start page write
//-------------------------------------------------
while (NVMCON0bits.GO);             // Wait for the write operation to complete
// Verify write operation success and call the recovery function if needed
if (NVMCON1bits.WRERR){
   WRITE_FAULT_RECOVERY();
}

INTCON0bits.GIE = GIEBitValue;      // Restore interrupt enable bit value
NVMCON1bits.CMD = 0x00;             // Disable writes to memory
```

10.3.5 Word Write

PFM can be written one word at a time to a pre-erased memory location. Refer to **"Word Modify"** section for more information on writing to a pre-written memory location.

A single word is written by setting the NVMADR to the target address and loading NVMDAT with the desired word. The word is then transferred to PFM by setting the NVMCMD bits to 'b011 then executing the unlock sequence.

The sequence of events for programming single word to a pre-erased location of PFM is:

1. Set the NVMADR registers to the target address.
2. Load the NVMDAT with desired word.
3. Set the NVMCMD control bits to 'b011 (Word Write).
4. Disable all interrupts.
5. Perform the unlock sequence as described in the Unlock Sequence section.
6. Set the GO bit to start the PFM word write.
7. Monitor the GO bit or NVMIF interrupt flag to determine when the write has completed.
8. Interrupts can be enabled after the GO bit is clear.
9. Set the NVMCMD control bits to 'b000.

Example 10-7. Writing a Word of Program Flash Memory in C

```
// Code sequence to program one word to a pre-erased location in PFM
// PFM target address is specified by WORD_ADDR
// Target data is specified by WordValue

// Save interrupt enable bit value
uint8_t GIEBitValue = INTCON0bits.GIE;

// Load NVMADR with the target address of the word
NVMADR = WORD_ADDR;
NVMDAT = WordValue;                 // Load NVMDAT with the desired value
NVMCON1bits.CMD = 0x03;             // Set the word write command
INTCON0bits.GIE = 0;                // Disable interrupts
//--------- Required Unlock Sequence ---------
NVMLOCK = 0x55;
NVMLOCK = 0xAA;
NVMCON0bits.GO = 1;                 // Start word write
//-------------------------------------------------
while (NVMCON0bits.GO);             // Wait for the write operation to complete
// Verify word write operation success and call the recovery function if needed
if (NVMCON1bits.WRERR){
   WRITE_FAULT_RECOVERY();
}

INTCON0bits.GIE = GIEBitValue;      // Restore interrupt enable bit value
NVMCON1bits.CMD = 0x00;             // Disable writes to memory
```

10.3.6 Word Modify

Changing a word in PFM requires erasing the word before it is re-written. However, the PFM cannot be erased by less than a page at a time. Changing a single word requires reading the page, erasing the page, and then re-writing the page with the modified word. The NVM command set includes page operations to simplify this task.

The steps necessary to change one or more words in PFM space are as follows:

1. Set the NVMADR registers to the target address.
2. Set the NVMCMD to 'b010 (Page Read).
3. Set the GO bit to start the PFM read into the GPR buffer.
4. Monitor the GO bit or NVMIF interrupt flag to determine when the read has completed.
5. Make the desired changes to the GPR buffer data.
6. Set NVMCMD to 'b110 (Page Erase).
7. Disable all interrupts.
8. Perform the unlock sequence as described in the Unlock Sequence section.
9. Set the GO bit to start the PFM page erase.
10. Monitor the GO bit or NVMIF interrupt flag to determine when the erase has completed.
11. Set NVMCMD to 'b101 (Page Write).
12. Perform the unlock sequence.
13. Set the GO bit to start the PFM page write.
14. Monitor the GO bit or NVMIF interrupt flag to determine when the write has completed.
15. Interrupts can be enabled after the GO bit is clear.
16. Set the NVMCMD control bits to 'b000.

Example 10-8. Modifying a Word in Program Flash Memory in C

```
// Code sequence to modify one word in a programmed page of PFM
// The variable with desired value is specified by ModifiedWord
// PFM target address is specified by WORD_ADDR
// PFM page size is specified by PAGESIZE
// The Buffer RAM start address is specified by BufferRAMStartAddr. This value
// will be changed based on the device, refer to the "Memory Organization"
//chapter for more detail.

// Save Interrupt Enable bit Value
uint8_t GIEBitValue = INTCON0bits.GIE;

uint16_t bufferRAM __at(BufferRAMStartAddr);

// Defining a pointer to the first location of the Buffer RAM
uint16_t *bufferRamPtr = (uint16_t*) & bufferRAM;

// Load NVMADR with the base address of the memory page
NVMADR = WORD_ADDR;
NVMCON1bits.CMD = 0x02;             // Set the page read command
INTCON0bits.GIE = 0;                // Disable interrupts
NVMCON0bits.GO = 1;                 // Start page read
while (NVMCON0bits.GO);             // Wait for the read operation to complete

// NVMADR is already pointing to target page
NVMCON1bits.CMD = 0x06;             // Set the page erase command
//--------- Required Unlock Sequence ---------
NVMLOCK = 0x55;
NVMLOCK = 0xAA;
NVMCON0bits.GO = 1;                 // Start page erase
//--------------------------------------------
while (NVMCON0bits.GO);             // Wait for the erase operation to complete
// Verify erase operation success and call the recovery function if needed
if (NVMCON1bits.WRERR){
   ERASE_FAULT_RECOVERY();
}

//Modify Buffer RAM for the given word to be written to PFM
uint8_t offset = (uint8_t) ((WORD_ADDR & ((PAGESIZE * 2) - 1)) / 2);
bufferRamPtr += offset;
*bufferRamPtr = ModifiedWord;

// NVMADR is already pointing to target page
NVMCON1bits.CMD = 0x05;             // Set the page write command
//--------- Required Unlock Sequence ---------
NVMLOCK = 0x55;
NVMLOCK = 0xAA;
NVMCON0bits.GO = 1;                 // Start page write
//--------------------------------------------
```

```
while (NVMCON0bits.GO);             // Wait for the write operation to complete
// Verify write operation success and call the recovery function if needed
if (NVMCON1bits.WRERR){
   WRITE_FAULT_RECOVERY();
}

INTCON0bits.GIE = GIEBitValue;      // Restore interrupt enable bit value
NVMCON1bits.CMD = 0x00;             // Disable writes to memory
```

10.3.7 Write Verify

Depending on the application, good programming practice may dictate that the value written to the memory should be verified against the original value. This should be used in applications where excessive writes can stress bits near the specification limit. Since program memory is stored as a full page, the stored program memory contents are compared with the intended data stored in the buffer RAM after the last write is complete.

Figure 10-2. Program Flash Memory Write Verify Flowchart

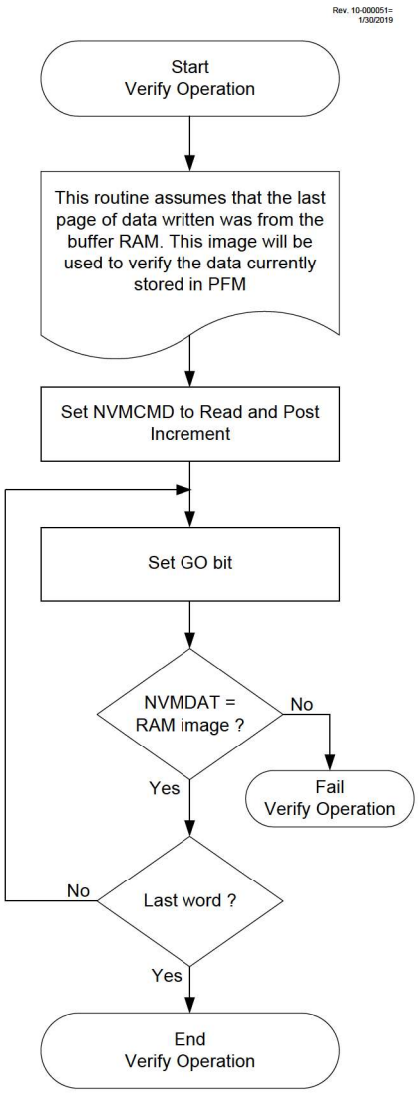

10.3.8 Unexpected Termination of Write Operation

If a write is terminated by an unplanned event, such as loss of power or an unexpected Reset, the memory location just programmed should be verified and reprogrammed, if needed. If the write operation is interrupted by a $\overline{\text{MCLR}}$ Reset or a WDT Time-out Reset during normal operation, the WRERR bit will be set, which the user can check to decide whether a rewrite of the location(s) is needed.

10.3.9 User ID, Device ID, Configuration Settings Access, DIA and DCI

The NVMADR value determines which NVM address space is accessed. The User IDs and Configuration areas allow read and write access, whereas Device and Revision IDs are limited to read-only.

Reading and writing User ID space is identical to reading and writing PFM space as described in the preceding paragraphs.

Writing to the Configuration bits is performed in the same manner as writing to the Data Flash Memory (DFM). Configuration settings are modified one byte at a time with the NVM Read and Write operations. When a Write operation is performed on a Configuration byte, an erase byte is performed automatically before the new byte is written. Any code protection settings that are not enabled will remain not enabled after the Write operation, unless the new values enable them. However, any code protection settings that are enabled cannot be disabled by a self-write of the configuration space. The user can modify the configuration space by the following steps:

1. Read the target Configuration byte by setting the NVMADR with the target address.
2. Retrieve the Configuration byte with the Read operation (NVMCMD = 'b000).
3. Modify the Configuration byte in NVMDAT register.
4. Write the NVMDAT register to the Configuration byte using the Write operation (NVMCMD = 'b011) and unlock sequence.

10.3.10 Table Pointer Operations

In order to read and write program memory, there are two operations that allow the processor to move bytes between the program memory space and the data RAM:

- Table Read (TBLRD*)
- Table Write (TBLWT*)

The SFR registers associated with these operations include:

- TABLAT register
- TBLPTR registers

The program memory space is 16 bits wide, while the data RAM space is eight bits wide. The TBLPTR registers determine the address of one byte of the NVM memory. Table reads move one byte of data from NVM space to the TABLAT register, and table writes move the TABLAT data to the buffer RAM ready for a subsequent write to NVM space with the NVM controls.

10.3.10.1 Table Pointer Register

The Table Pointer (TBLPTR) register addresses a byte within the program memory. The TBLPTR comprises three SFR registers: Table Pointer Upper Byte, Table Pointer High Byte and Table Pointer Low Byte (TBLPTRU:TBLPTRH:TBLPTRL). These three registers join to form a 22-bit wide pointer (bits 0 through 21). The bits 0 through 20 allow the device to address up to 2 Mbytes of program memory space. Bit 21 allows access to the Device ID, the User ID,Configuration bits, and the DIA and DCI.

The Table Pointer register, TBLPTR, is used by the TBLRD and TBLWT instructions. These instructions can increment and decrement the TBLPTR depending on specific appended characters as shown in the following table. The increment and decrement operations on the TBLPTR affect only bits 0 through 20.

Table 10-3. Table Pointer Operations with TBLRD and TBLWT Instructions

Example	Operation on Table Pointer
TBLRD* TBLWT*	TBLPTR is not modified

TBLRD*+ TBLWT*+	TBLPTR is incremented after the read/write
TBLRD*- TBLWT*-	TBLPTR is decremented after the read/write
TBLRD+* TBLWT+*	TBLPTR is incremented before the read/write

10.3.10.2 Table Latch Register

The Table Latch (TABLAT) is an 8-bit register mapped into the SFR space. The Table Latch register receives one byte of NVM data resulting from a TBLRD* instruction and is the source of the 8-bit data sent to the holding register space as a result of a TBLWT* instruction.

10.3.10.3 Table Read Operations

The table read operation retrieves one byte of data directly from program memory pointed to by the TBLPTR registers and places it into the TABLAT register. The following figure shows the operation of a table read.

Figure 10-3. Table Read Operation

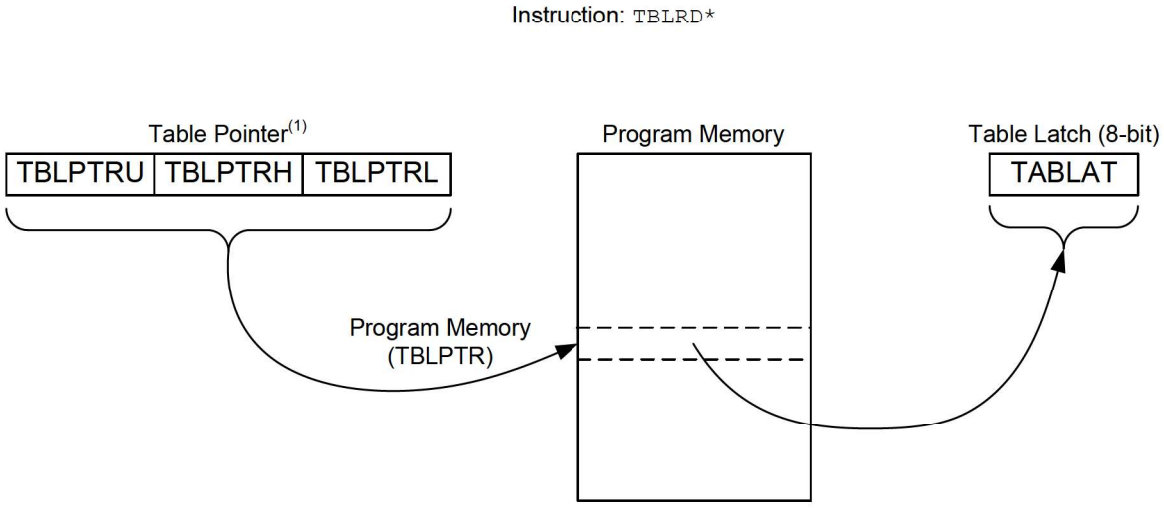

Note 1: The Table Pointer register points to a byte in program memory.

10.3.10.4 Table Write Operations

The table write operation stores one byte of data from the TABLAT register into a buffer RAM register. The following figure shows the operation of a table write from the TABLAT register to the buffer RAM space. The procedure to write the contents of the buffer RAM into program memory is detailed in the "**Writing to Program Flash Memory**" section.

Figure 10-4. Table Write Operation

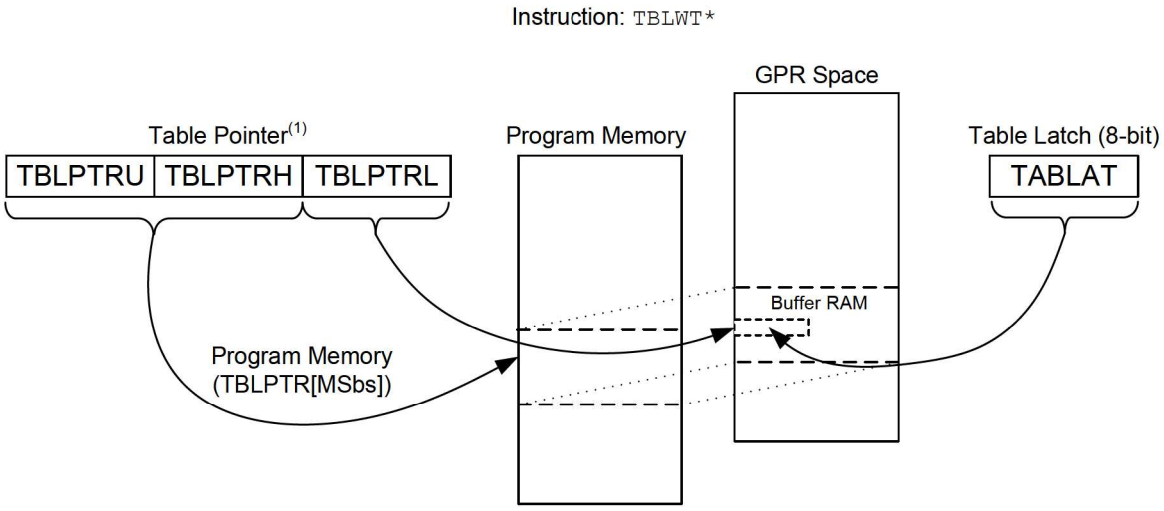

Note 1: During table writes the Table Pointer does not point directly to program memory. TBLPTRL actually points to an address within the buffer registers. TBLPTRU:TBLPTRH points to program memory where the entire buffer space will eventually be written with the NVM commands.

Table operations work with byte entities. Tables containing data, rather than program instructions, are not required to be word-aligned. Therefore, a table can start and end at any byte address. If a table write is being used to write executable code into program memory, program instructions will need to be word-aligned.

10.3.10.5 Table Pointer Boundaries

The TBLPTR register is used in reads of the Program Flash Memory. Writes using the TBLPTR register go into to a buffer RAM from which the data can eventually be transferred to Program Flash Memory using the NVMADR register and NVM commands.

When a TBLRD instruction is executed, all 22 bits of the TBLPTR determine which byte is read from program memory directly into the TABLAT register.

When a TBLWT instruction is executed the byte in the TABLAT register is written, not to Flash memory but to a buffer register in preparation for a program memory write. All the buffer registers together form a write block of size 128 words/256 bytes. The LSbs of the TBLPTR register determine to which specific address within the buffer register block the write affects. The size of the write block determines the number of LSbs that are affected. The MSbs of the TBLPTR register have no effect during TBLWT operations.

When a program memory page write is executed the entire buffer register block is written to the Flash memory at the address determined by the MSbs of the NVMADR register. The LSbs are ignored during Flash memory writes.

The following figure illustrates the relevant boundaries of the TBLPTR register based on NVM operations.

Figure 10-5. Table Pointer Boundaries Based on Operation

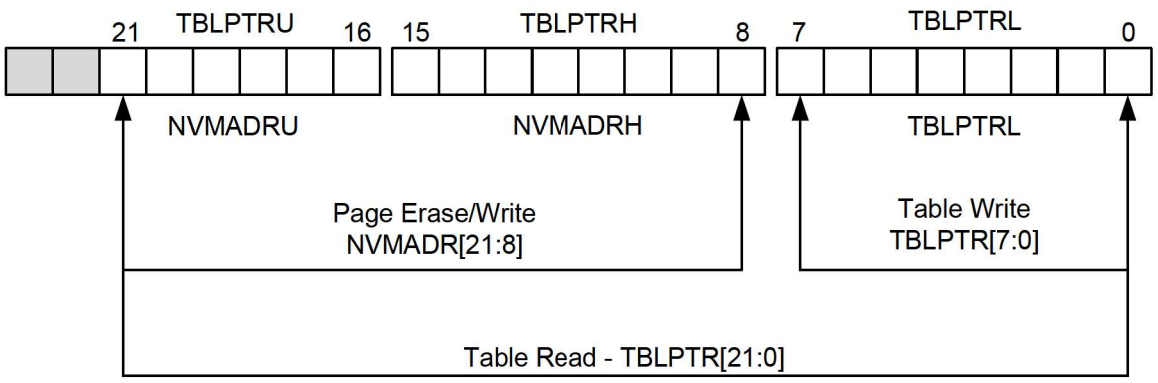

Note:

1. Refer to the **"Memory Organization"** chapter for more details about the the size of the buffer registers block.

10.3.10.6 Reading the Program Flash Memory

The TBLRD instruction retrieves data from program memory at the location to which the TBLPTR register points and places it into the TABLAT SFR register. Table reads from program memory are performed one byte at a time. The instruction set includes incrementing the TBLPTR register automatically for the next table read operation.

The CPU operation is suspended during the read, and resumes operation immediately after. From the user point of view, the value in the TABLAT register is valid in the next instruction cycle.

The internal program memory is typically organized by words. The Least Significant bit of the address selects between the high and low bytes of the word. The following figure illustrates the interface between the internal program memory and the TABLAT register.

Figure 10-6. Reads from Program Flash Memory

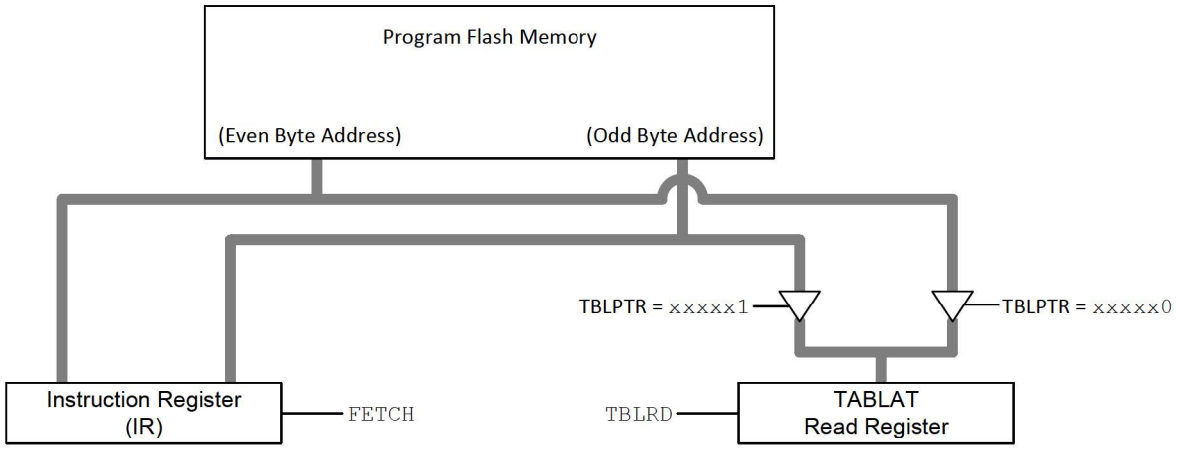

Figure 10-7. Program Flash Memory Read Flowchart

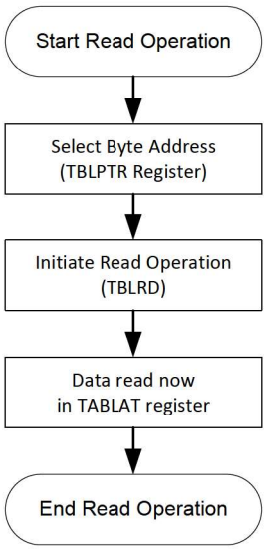

Example 10-9. Reading a Program Flash Memory Word

```
    MOVLW   CODE_ADDR_UPPER     ; Load TBLPTR with the base
    MOVWF   TBLPTRU             ; address of the word
    MOVLW   CODE_ADDR_HIGH
    MOVWF   TBLPTRH
    MOVLW   CODE_ADDR_LOW
    MOVWF   TBLPTRL
READ_WORD:
    TBLRD*+                     ; read into TABLAT and increment
    MOVF    TABLAT, W           ; get data
    MOVWF   WORD_EVEN
    TBLRD*+                     ; read into TABLAT and increment
    MOVFW   TABLAT, W           ; get data
    MOVF    WORD_ODD
```

10.4 Data Flash Memory (DFM)

The Data Flash Memory is a nonvolatile memory array, also referred to as EEPROM. The DFM is mapped above program memory space. The DFM can be accessed using the Table Pointer or NVM Special Function Registers (SFRs). The DFM is readable and writable during normal operation over the entire V_{DD} range.

The DFM can only be read and written one byte at a time. When interfacing to the data memory block, the NVMDATL register holds the 8-bit data for read/write and the NVMADR register holds the address of the DFM location being accessed.

The DFM is rated for high erase/write cycle endurance. A byte write automatically erases the location and writes the new data (erase-before-write). The write time is controlled by an internal programming timer; it will vary with voltage and temperature as well as from device-to-device. Refer to the data EEPROM memory parameters in the **"Electrical specifications"** chapter for the limits.

10.4.1 Reading the DFM

To read a DFM location, the user must write the address to the NVMADR register, set the NVMCMD bits for a single read operation (NVMCMD = 'b000), and then set the GO control bit. The data is available on the very next instruction cycle. Therefore, the NVMDATL register can be read by the next instruction. NVMDATL will hold this value until another read operation, or until it is written to by the user (during a write operation).

Note: Only byte reads are supported for DFM. Reading DFM with the Read Page operation is not supported.

The sequence of events for reading a byte of DFM is:

1. Set the NVMADR registers to an address within the intended page.
2. Set the NVMCMD control bits to 'b000. (Byte Read)
3. Set the GO bit to start the DFM byte read.
4. Monitor the GO bit or NVMIF interrupt flag to determine when the read has completed.

This process is also shown in the following flowchart.

Figure 10-8. DFM Read Flowchart

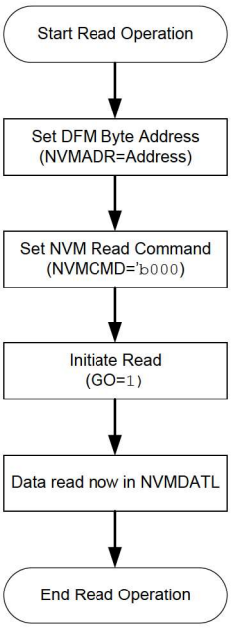

Example 10-10. Reading a Byte from Data Flash Memory in C

```
// Code sequence to read one byte from DFM
// DFM target address is specified by DFM_ADDR

// Variable to store the byte value from desired location in DFM
uint8_t ByteValue;

// Load NVMADR with the desired byte address
NVMADR = DFM_ADDR;
NVMCON1bits.CMD = 0x00;             // Set the byte read command
NVMCON0bits.GO = 1;                 // Start byte read
while (NVMCON0bits.GO);             // Wait for the read operation to complete
ByteValue = NVMDATL;                // Store the read value to a variable
```

10.4.2 Writing to DFM

To write a DFM location, the address must first be written to the NVMADR register, the data written to the NVMDATL register, and the Write operation command set in the NVMCMD bits. The sequence shown in Unlock Sequence must be followed to initiate the write cycle. Multi-byte Page writes are not supported for the DFM.

The write will not begin if the NVM unlock sequence is not exactly followed for each byte. It is strongly recommended that interrupts be disabled during this code segment.

When not actively writing to the DFM, the NVMCMD bits should be kept clear at all times as an extra precaution against accidental writes. The NVMCMD bits are not cleared by hardware.

After a write sequence has been initiated, NVMCON0, NVMCON1, NVMADR and NVMDAT cannot be modified.

Each DFM write operation includes an implicit erase cycle for that byte. CPU execution continues in parallel and at the completion of the write cycle, the GO bit is cleared in hardware and the NVM Interrupt Flag bit (NVMIF) is set. The user can either enable the interrupt or poll the bit. NVMIF must be cleared by software.

The sequence of events for programming one byte of DFM is:

1. Set NVMADR registers with the target byte address.
2. Load NVMDATL register with desired byte.
3. Set the NVMCMD control bits to `'b011`. (Byte Write)
4. Disable all interrupts.
5. Perform the unlock sequence as described in the Unlock Sequence section.
6. Set the GO bit to start the DFM byte write.
7. Monitor the GO bit or NVMIF interrupt flag to determine when the write has completed.
8. Interrupts can be enabled after the GO bit is clear.
9. Set the NVMCMD control bits to `'b000`.

Example 10-11. Writing a Byte to Data Flash memory in C

```
// Code sequence to write one byte to a DFM
// DFM target address is specified by DFM_ADDR
// Target data is specified by ByteValue

// Save interrupt enable bit value
uint8_t GIEBitValue = INTCON0bits.GIE;

// Load NVMADR with the target address of the byte
NVMADR = DFM_ADDR;
NVMDATL = ByteValue;                // Load NVMDAT with the desired value
NVMCON1bits.CMD = 0x03;             // Set the byte write command
INTCON0bits.GIE = 0;                // Disable interrupts
//---------- Required Unlock Sequence ----------
NVMLOCK = 0x55;
NVMLOCK = 0xAA;
NVMCON0bits.GO = 1;                 // Start byte write
//-----------------------------------------------
while (NVMCON0bits.GO);             // Wait for the write operation to complete
// Verify byte write operation success and call the recovery function if needed
if (NVMCON1bits.WRERR){
   WRITE_FAULT_RECOVERY();
}

INTCON0bits.GIE = GIEBitValue;      // Restore interrupt enable bit value
NVMCON1bits.CMD = 0;                // Disable writes to memory
```

10.4.3 Erasing the DFM

The DFM does not support the Page Erase operation. However, the DFM can be erased by writing 0xFF to all locations in the memory that need to be erased. The simple code example bellow shows how to erase 'n' number of bytes in DFM. Refer to the **"Memory Organization"** chapter for more detail about the DFM size and valid address locations.

Example 10-12. Erasing n Bytes of Data Flash Memory in C

```
// Code sequence to erase n bytes of DFM
// DFM target start address is specified by PAGE_ADDR
// Number of bytes to be eares is specified by n

// Save interrupt enable bit value
uint8_t GIEBitValue = INTCON0bits.GIE;

// Load NVMADR with the target address of the byte
NVMADR = DFM_ADDR;
NVMDATL = 0xFF;                     // Load NVMDATL with 0xFF
NVMCON1bits.CMD = 0x04;             // Set the write and post increment command
INTCON0bits.GIE = 0;                // Disable interrupts
```

```
for (uint8_t i = 0; i < n; i++}(
        NVMLOCK = 0x55;
        NVMLOCK = 0xAA;
        NVMCON0bits.GO = 1;
}

// Verify byte erase operation success and call the recovery function if needed
if (NVMCON1bits.WRERR){
   ERASE_FAULT_RECOVERY();
}

INTCON0bits.GIE = GIEBitValue;      // Restore interrupt enable bit value
NVMCON1bits.CMD = 0;                // Disable writes to memory
```

10.4.4 DFM Write Verify

Depending on the application, good programming practice may dictate that the value written to the memory should be verified against the original value. This should be used in applications where excessive writes can stress bits near the specification limit.

10.4.5 Operation During Code-Protect and Write-Protect

The DFM can be code-protected using the $\overline{CP}$ Configuration Bit. In-Circuit Serial Programming read and write operations are disabled when code protection is enabled. However, internal reads operate normally. Internal writes operate normally provided that write protection is not enabled.

If the DFM is write-protected or if NVMADR points at an invalid address location, attempts to set the GO bit will fail and the WRERR bit will be set.

10.4.6 Protection Against Spurious Writes

A write sequence is valid only when both the following conditions are met. This prevents spurious writes that might lead to data corruption.

1. All NVM read, write, and erase operations are enabled with the NVMCMD control bits. It is suggested to have the NVMCMD bits cleared at all times except during memory writes. This prevents memory operations if any of the control bits are set accidentally.
2. The NVM unlock sequence must be performed each time before all operations except the memory read operation.

10.5 Register Definitions: NVM

10.5.1 NVMCON0

Name: NVMCON0
Address: 0x040

Nonvolatile Memory Control Register 0

Bit	7	6	5	4	3	2	1	0
								GO
Access								R/S/HC
Reset								0

Bit 0 – GO Start Operation Control
Start the operation specified by the NVMCMD bits

Value	Description
1	Start operation (must be set after UNLOCK sequence for all operations except READ)
0	Operation is complete

10.5.2 NVMCON1

Name: NVMCON1
Address: 0x041

Nonvolatile Memory Control Register 1

Bit	7	6	5	4	3	2	1	0
	WRERR					NVMCMD[2:0]		
Access	R/C/HS					R/W	R/W	R/W
Reset	0					0	0	0

Bit 7 – WRERR NVM Write Error
Reset States: POR = 0
All other resets = u

Value	Description
1	A write operation was interrupted by a Reset, or a write or erase operation was attempted on a write-protected area, or a write or erase operation was attempted on an unimplemented area, or a write or erase operation was attempted while locked, or a page operation was directed to a DFM area
0	All write/erase operations have completed successfully

Bits 2:0 – NVMCMD[2:0] NVM Command

Table 10-4. NVM Operations

NVMCMD	Unlock	Operation	DFM	PFM	Source/Destination	WRERR	INT
000	No	Read	byte	word	NVM to NVMDAT	No	No
001	No	Read and Post Increment	byte	word	NVM to NVMDAT	No	No
010	No	Read Page	—	page	NVM to Buffer RAM	No	No
011	Yes	Write	byte	word	NVMDAT to NVM	Yes	Yes
100	Yes	Write and Post Increment	byte	word	NVMDAT to NVM	Yes	Yes
101	Yes	Write Page	—	page	Buffer RAM to NVM	Yes	Yes
110	Yes	Erase Page	—	page	n/a	Yes	Yes
111	No	Reserved (No Operation)	—	—	—	No	No

10.5.3 NVMLOCK

Name: NVMLOCK
Address: 0x042

Nonvolatile Memory Write Restriction Control Register

NVM write and erase operations require writing 0x55 then 0xAA to this register immediately before the operation execution.

Bit	7	6	5	4	3	2	1	0
	NVMLOCK[7:0]							
Access	WO	WO	WO	WO	WO	WO	WO	WO
Reset	0	0	0	0	0	0	0	0

Bits 7:0 – NVMLOCK[7:0]
Reading this register always returns '0'.

10.5.4 NVMADR

Name: NVMADR
Address: 0x043

Nonvolatile Memory Address Register

Bit	23	22	21	20	19	18	17	16
			NVMADR[21:16]					
Access			R/W	R/W	R/W	R/W	R/W	R/W
Reset			0	0	0	0	0	0

Bit	15	14	13	12	11	10	9	8
	NVMADR[15:8]							
Access	R/W	R/W	R/W	R/W	R/W	R/W	R/W	R/W
Reset	0	0	0	0	0	0	0	0

Bit	7	6	5	4	3	2	1	0
	NVMADR[7:0]							
Access	R/W	R/W	R/W	R/W	R/W	R/W	R/W	R/W
Reset	0	0	0	0	0	0	0	0

Bits 21:0 – NVMADR[21:0] NVM Address

Notes: The individual bytes in this multi-byte register can be accessed with the following register names:

- NVMADRU: Accesses the upper byte NVMADR[21:16]
- NVMADRH: Accesses the high byte NVMADR[15:8]
- NVMADRL: Accesses the low byte NVMADR[7:0]

10.5.5 NVMDAT

Name: NVMDAT
Address: 0x046

Nonvolatile Memory Data Register

Bit	15	14	13	12	11	10	9	8
	NVMDAT[15:8]							
Access	R/W	R/W	R/W	R/W	R/W	R/W	R/W	R/W
Reset	0	0	0	0	0	0	0	0

Bit	7	6	5	4	3	2	1	0
	NVMDAT[7:0]							
Access	R/W	R/W	R/W	R/W	R/W	R/W	R/W	R/W
Reset	0	0	0	0	0	0	0	0

Bits 15:0 – NVMDAT[15:0] NVM Data

Notes: The individual bytes in this multi-byte register can be accessed with the following register names:

- NVMDATH: Accesses the high byte NVMDAT[15:8]
- NVMDATL: Accesses the low byte NVMDAT[7:0]

10.5.6 TBLPTR

Name: TBLPTR
Address: 0x4F6

Table Pointer Register

Bit	23	22	21	20	19	18	17	16
			TBLPTR21	TBLPTR[20:16]				
Access			R/W	R/W	R/W	R/W	R/W	R/W
Reset			0	0	0	0	0	0

Bit	15	14	13	12	11	10	9	8
	TBLPTR[15:8]							
Access	R/W	R/W	R/W	R/W	R/W	R/W	R/W	R/W
Reset	0	0	0	0	0	0	0	0

Bit	7	6	5	4	3	2	1	0
	TBLPTR[7:0]							
Access	R/W	R/W	R/W	R/W	R/W	R/W	R/W	R/W
Reset	0	0	0	0	0	0	0	0

Bit 21 – TBLPTR21 NVM Most Significant Address bit

Value	Description
1	Access Configuration, User ID, Device ID, and Revision ID spaces
0	Access Program Flash Memory space

Bits 20:0 – TBLPTR[20:0] NVM Address bits

Notes: The individual bytes in this multi-byte register can be accessed with the following register names:

- TBLPTRU: Accesses the upper byte TBLPTR[21:16]
- TBLPTRH: Accesses the high byte TBLPTR[15:8]
- TBLPTRL: Accesses the low byte TBLPTR[7:0]

10.5.7 TABLAT

Name: TABLAT
Address: 0x4F5

Table Latch Register

Bit	7	6	5	4	3	2	1	0
	TABLAT[7:0]							
Access	R/W	R/W	R/W	R/W	R/W	R/W	R/W	R/W
Reset	0	0	0	0	0	0	0	0

Bits 7:0 – TABLAT[7:0] The value of the NVM memory byte returned from the address contained in TBLPTR after a TBLRD command, or the data written to the latch by a TBLWT command.

10.6 Register Summary - NVM

Address	Name	Bit Pos.	7	6	5	4	3	2	1	0
0x00 ... 0x3F	Reserved									
0x40	NVMCON0	7:0								GO
0x41	NVMCON1	7:0	WRERR					NVMCMD[2:0]		
0x42	NVMLOCK	7:0	NVMLOCK[7:0]							
0x43	NVMADR	7:0	NVMADR[7:0]							
		15:8	NVMADR[15:8]							
		23:16			NVMADR[21:16]					
0x46	NVMDAT	7:0	NVMDAT[7:0]							
		15:8	NVMDAT[15:8]							
0x48 ... 0x04F4	Reserved									
0x04F5	TABLAT	7:0	TABLAT[7:0]							
0x04F6	TBLPTR	7:0	TBLPTR[7:0]							
		15:8	TBLPTR[15:8]							
		23:16			TBLPTR21	TBLPTR[20:16]				

11. VIC - Vectored Interrupt Controller Module

11.1 Overview

The Vectored Interrupt Controller (VIC) module reduces the numerous peripheral interrupt request signals to a single interrupt request signal to the CPU. This module includes the following major features:

- Interrupt Vector Table (IVT) with a unique vector for each interrupt source
- Fixed and ensured interrupt latency
- Programmable base address for IVT with lock
- Two user-selectable priority levels - High priority and low priority
- Two levels of context saving
- Interrupt state Status bits to indicate the current execution status of the CPU

The VIC module assembles all of the interrupt request signals and resolves the interrupts based on both a fixed natural order priority (i.e., determined by the IVT), and a user-assigned priority (i.e., determined by the IPRx registers), thereby eliminating scanning of interrupt sources.

11.2 Interrupt Control and Status Registers

The devices in this family implement the following registers for the interrupt controller:

- INTCON0, INTCON1 Control Registers
- PIRx - Peripheral Interrupt Status Registers
- PIEx - Peripheral Interrupt Enable Registers
- IPRx - Peripheral Interrupt Priority Registers
- IVTBASE Address Registers
- IVTLOCK Register

Global interrupt control functions and external interrupts are controlled from the INTCON0 register. The INTCON1 register contains the status flags for the interrupt controller.

The PIRx registers contain all of the interrupt request flags. Each source of interrupt has a Status bit, which is set by the respective peripherals or an external signal, and is either cleared via software or automatically cleared by hardware upon clearing of the interrupt condition, depending on the peripheral and bit.

The PIEx registers contain all of the interrupt enable bits. These control bits are used to individually enable interrupts from the peripherals or external signals.

The IPRx registers are used to set the interrupt priority level for each source of interrupt. Each user interrupt source can be assigned to either a high or low priority.

The IVTBASE register is user programmable and is used to determine the start address of the IVT and the IVTLOCK register is used to prevent any unintended writes to the IVTBASE register.

There are two other Configuration bits that control the way the interrupt controller can be configured: the MVECEN bit and the IVT1WAY bit.

The MVECEN bit determines whether the IVT is used to determine the interrupt priorities. The IVT1WAY bit determines the number of times that the IVTLOCKED bit can be cleared and set after a device Reset. See Interrupt Vector Table Address Calculation for details.

11.3 Interrupt Vector Table

The interrupt controller supports an IVT that contains the vector address location for each interrupt request source.

The IVT resides in program memory, starting at the address location determined by IVTBASE The IVT contains one vector for each source of interrupt. Each interrupt vector location contains the starting address of the associated Interrupt Service Routine (ISR).

The MVECEN Configuration bit controls the availability of the vector table.

11.3.1 Interrupt Vector Table Base Address (IVTBASE)

The start address of the vector table is user-programmable through the IVTBASE. The user must ensure the start address is such that it can encompass the entire vector table inside the program memory.

Each vector address is a 16-bit word (or two address locations on PIC18 devices). For 'n' interrupt sources, there are '2n' address locations necessary to hold the table, starting from IVTBASE as the first location. Thus, the starting address should be chosen such that the address range from IVTBASE to "IVTBASE+2n-1" can be encompassed within the program Flash memory.

For example, if the highest vector number was 81, IVTBASE should be chosen such that "IVTBASE+0xA1" is less than the last memory location in program Flash memory.

A programmable vector table base address is useful in situations to switch between different sets of vector tables, depending on the application. It can also be used when the application program needs to update the existing vector table (vector address values).

Important: It is required that the user assign an even address to IVTBASE for correct operation.

11.3.2 Interrupt Vector Table Contents

MVECEN = 0

When MVECEN = 0, the address location pointed to by IVTBASE has a GOTO instruction for a high-priority interrupt. Similarly, the corresponding low-priority vector also has a GOTO instruction, which is executed in case of a low-priority interrupt.

MVECEN = 1

When MVECEN = 1, the value in the vector table of each interrupt points to the address location of the first instruction of the Interrupt Service Routine, hence: ISR Location = Interrupt Vector Table entry << 2.

11.3.3 Interrupt Vector Table Address Calculation

MVECEN = 0

When the MVECEN Configuration bit is cleared, the address pointed to by IVTBASE is used as the high-priority interrupt vector address. The low-priority interrupt vector address is offset eight instruction words from the address in IVTBASE.

For PIC18 devices, IVTBASE defaults to 000008h, hence the high-priority interrupt vector address will be 000008h and the low-priority interrupt vector address will be 000018h.

MVECEN = 1

Each interrupt has a unique vector number associated with it as defined in the IVT. This vector number is used for calculating the location of the interrupt vector for a particular interrupt source.

Interrupt Vector Address = IVTBASE + (2*Vector Number).

This calculated interrupt vector address value is stored in IVTAD register when an interrupt is received.

User-assigned software priority, when assigned using the IPRx registers, does not affect address calculation and is only used to resolve concurrent interrupts.

Important: If for any reason the address of the ISR could not be fetched from the vector table, it will cause the system to Reset and clear the Memory Execution Violation flag in the Power Control register. This can occur due to any one of the following:

- The entry for the interrupt in the vector table lies outside the executable program memory area.
- ISR pointed by the vector table lies outside the executable program memory area.

Table 11-1. IVT Calculations Summary

IVT Address Calculation		Interrupt Priority INTCON0 Register, IPEN bit	
		0	1
Multivector Enable, MVECEN Configuration bit	0	IVTBASE	High Priority IVTBASE
			Low Priority IVTBASE + 8 words
	1	IVTBASE + 2*(Vector Number)	

11.3.4 Access Control for IVTBASE Registers

The interrupt controller has an IVTLOCKED bit, which can be set to avoid inadvertent changes to the contents of IVTBASE. Setting and clearing this bit requires a special sequence as an extra precaution against inadvertent changes.

To allow writes to IVTBASE, the interrupts must be disabled (GIEH = 0) and IVTLOCKED bit must be cleared. The user must follow the sequence shown below to clear the IVTLOCKED bit.

Example 11-1. IVT UNLOCK SEQUENCE

```
; Disable Interrupts:
    BCF INTCON0, GIE;

; Bank to IVTLOCK register
    BANKSEL IVTLOCK;
    MOVLW 55h;

; Required sequence, next 4 instructions
    MOVWF IVTLOCK;
    MOVLW AAh;
    MOVWF IVTLOCK;

; Clear IVTLOCKED bit to enable writes
    BCF IVTLOCK, IVTLOCKED;

; Enable Interrupts
    BSF INTCON0, GIE;
```

The user must follow the following sequence to set IVTLOCKED bit.

Example 11-2. IVT LOCK SEQUENCE

```
; Disable Interrupts:
    BCF INTCON0, GIE;

; Bank to IVTLOCK register
    BANKSEL IVTLOCK;
    MOVLW 55h;

; Required sequence, next 4 instructions
    MOVWF IVTLOCK;
    MOVLW AAh;
    MOVWF IVTLOCK;

; Set IVTLOCKED bit to enable writes
    BSF IVTLOCK, IVTLOCKED;

; Enable Interrupts
    BSF INTCON0, GIE;
```

When the IVT1WAY Configuration bit is set, IVTLOCKED bit can be cleared and set only once after a device Reset. The unlock operation will have no effect after the lock sequence is used to set the IVTLOCKED bit. Unlocking is inhibited until a system Reset occurs.

11.4 Interrupt Priority

The final priority level for any pending source of interrupt is determined first by the user-assigned priority of that source in the IPRx register, then by the natural order priority within the IVT. The sections below detail the operation of interrupt priorities.

11.4.1 User (Software) Priority

User-assigned interrupt priority is enabled by setting IPEN. Each peripheral interrupt source can be assigned a high- or low-priority level by the user. The user-assignable interrupt priority control bits for each interrupt are located in the IPRx registers, which are device-specific and can be found in the respective data sheet for each device.

The interrupts are serviced based on a predefined interrupt priority scheme detailed below.

1. Interrupts set by the user as a high-priority interrupt have higher precedence of execution. High-priority interrupts will override a low-priority request when:
   1.1. A low-priority interrupt has been requested or its request is already pending.
   1.2. A low and high-priority interrupt are triggered concurrently (i.e., on the same instruction cycle).(1)
   1.3. A low-priority interrupt was requested and the corresponding Interrupt Service Routine is currently executing. In this case, the lower priority interrupt routine will be interrupted then complete executing after the high-priority interrupt has been serviced.(2)
2. Interrupts set by the user as low priority have a lower priority of execution and are preempted by any high-priority interrupt.
3. Interrupts defined with the same software priority cannot preempt or interrupt each other. Concurrent pending interrupts with the same user priority are resolved using the natural order priority (when vectored interrupts are enabled) or in the order the interrupt flag bits are polled in the ISR (when vectored interrupts are disabled).

Important:

1. When a high-priority interrupt preempts a concurrent low-priority interrupt, GIEL may be cleared in the high-priority Interrupt Service Routine. If GIEL is cleared, the low-priority interrupt will NOT be serviced, even if it was originally requested. The corresponding interrupt flag needs to be cleared in user code.
2. When a high-priority interrupt is requested while a low-priority Interrupt Service Routine is executing, GIEL may be cleared in the high-priority Interrupt Service Routine. The pending low-priority interrupt will resume, even if GIEL is cleared.

11.4.2 Natural Order (Hardware) Priority

When vectored interrupts are enabled and more than one interrupt with the same user specified priority level is requested, the priority conflict is resolved by using a method called “Natural Order Priority”. Natural order priority is a fixed priority scheme that is based on the IVT.

Table 11-2. Interrupt Vector Priority Table

Vector Number	Interrupt source	Vector Number (cont.)	Interrupt source (cont.)
0x0	Software Interrupt	0x2D	CLC2
0x1	HLVD (High/Low-Voltage Detect)	0x2E	PWM2PR
0x2	OSF (Oscillator Fail)	0x2F	PWM2
0x3	CSW (Clock Switching)	0x30	INT1
0x4	NVM	0x31	-
0x5	CLC1 (Configurable Logic Cell)	0x32	CWG1 (Complementary Waveform Generator)
0x6	CRC (Cyclic Redundancy Check)	0x33	NCO1 (Numerically Controlled Oscillator)
0x7	IOC (Interrupt-On-Change)	0x34	DMA2SCNT
0x8	INT0	0x35	DMA2DCNT
0x9	ZCD (Zero-Cross Detection)	0x36	DMA2OR
0xA	AD (ADC Conversion Complete)	0x37	DMA2A
0xB	ACT (Active Clock Tuning)	0x38	I2C1RX
0xC	CM1 (Comparator)	0x39	I2C1TX
0xD	SMT1 (Signal Measurement Timer)	0x3A	I2C1
0xE	-	0x3B	I2C1E
0xF	SMT1PWA	0x3C	-
0x10	ADT	0x3D	CLC3

.....continued

Vector Number	Interrupt source	Vector Number (cont.)	Interrupt source (cont.)
0x11 - 0x13	-	0x3E	PWM3PR
0x14	DMA1SCNT (Direct Memory Access)	0x3F	PWM3
0x15	DMA1DCNT	0x40	U2RX
0x16	DMA1OR	0x41	U2TX
0x17	DMA1A	0x42	U2E
0x18	SPI1RX (Serial Peripheral Interface)	0x43	U2
0x19	SPI1TX	0x44	-
0x1A	SPI1	0x45	CLC4
0x1B	TMR2	0x46	-
0x1C	TMR1	0x47	SCAN
0x1D	TMR1G	0x48	U3RX
0x1E	CCP1 (Capture/Compare/PWM)	0x49	U3TX
0x1F	TMR0	0x4A	U3E
0x20	U1RX	0x4B	U3
0x21	U1TX	0x4C	DMA3SCNT
0x22	U1E	0x4D	DMA3DCNT
0x23	U1	0x4E	DMA3OR
0x24	TMR3	0x4F	DMA3A
0x25	TMR3G	0x50	INT2
0x26	PWM1PR	0x51	-
0x27	PWM1	0x52	-
0x28	SPI2RX	0x53	TMR4
0x29	SPI2TX	0x54	DMA4SCNT
0x2A	SPI2	0x55	DMA4DCNT
0x2B	-	0x56	DMA4OR
0x2C	CM2 (Comparator)	0x57	DMA4A

The natural order priority scheme goes from high-to-low with increasing vector numbers, with 0 being the highest priority and decreasing from there.

For example, when two concurrently occurring interrupt sources that are both designated high priority, using the IPRx register will be resolved using the natural order priority (i.e., the interrupt with a lower corresponding vector number will preempt the interrupt with the higher vector number).

The ability for the user to assign every interrupt source to high- or low-priority levels means that the user program can give an interrupt with a low natural priority, a higher overall priority level.

11.5 Interrupt Operation

All pending interrupts are indicated by their respective flag bit being equal to a '1' in the PIRx register. All pending interrupts are resolved using the priority scheme explained in Interrupt Priority section.

Once the interrupt source to be serviced is resolved, the program execution vectors to the resolved interrupt vector addresses, as explained in Interrupt Vector Table section. The vector number is also stored in the WREG register. Most of the flag bits are required to be cleared by the application software, but in some cases, device hardware clears the interrupt automatically. Some flag bits are read-only in the PIRx registers. These flags are a summary of the source interrupts and the corresponding interrupt flags of the source must be cleared.

A valid interrupt can be either a high- or low-priority interrupt when in the main routine or a high-priority interrupt when in a low priority Interrupt Service Routine. Depending on the order of interrupt requests received and their relative timing, the CPU will be in a state of execution indicated by STAT bit

The state machine shown in Figure 11-1 and the subsequent sections detail the execution of interrupts when received in different orders.

Important: The state of GIEH/L is not changed by the hardware when servicing an interrupt. The internal state machine is used to keep track of execution states. These bits can be manipulated in the user code, resulting in transferring execution to the main routine and ignoring existing interrupts.

Figure 11-1. Vectored Interrupts State Transition Diagram

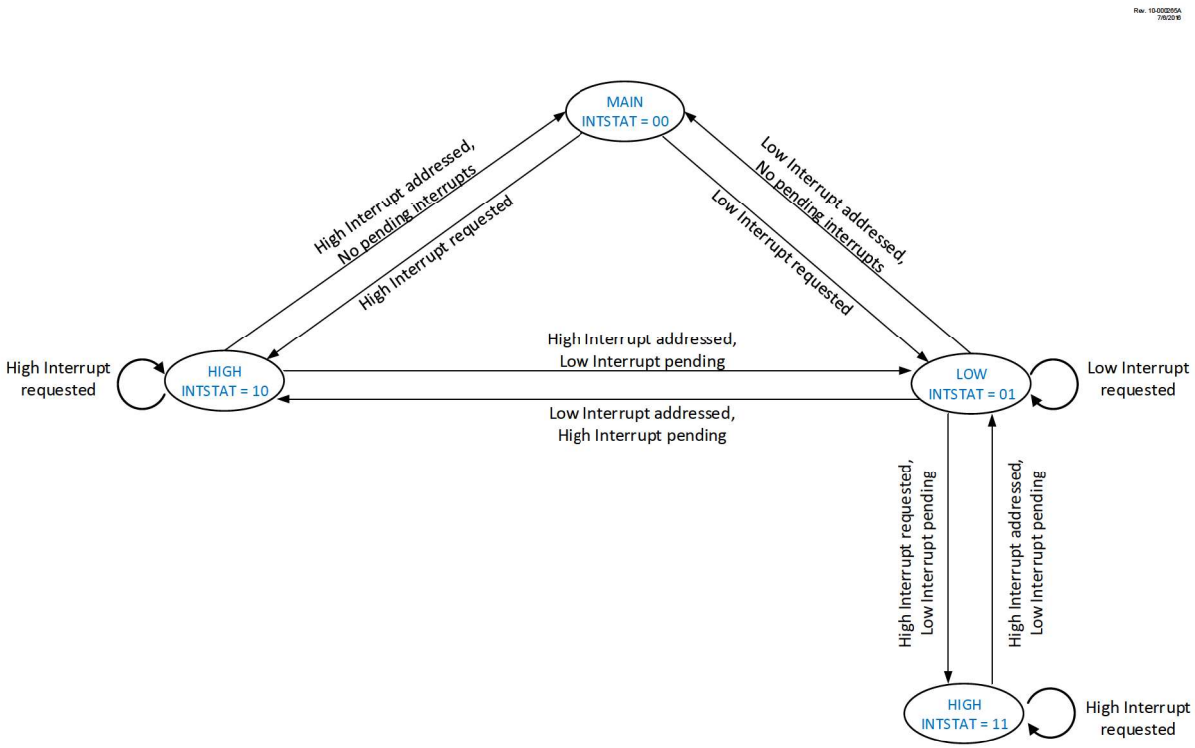

11.5.1 Serving a High- or Low-Priority Interrupt while the Main Routine Code is Executing

When a high- or low-priority interrupt is requested while the main routine code is executing, the main routine execution is halted and the ISR is addressed. Upon a return from the ISR (by executing the `RETFIE` instruction), the main routine resumes execution.

Figure 11-2. Interrupt Execution: High/Low-Priority Interrupt while Executing Main Routine

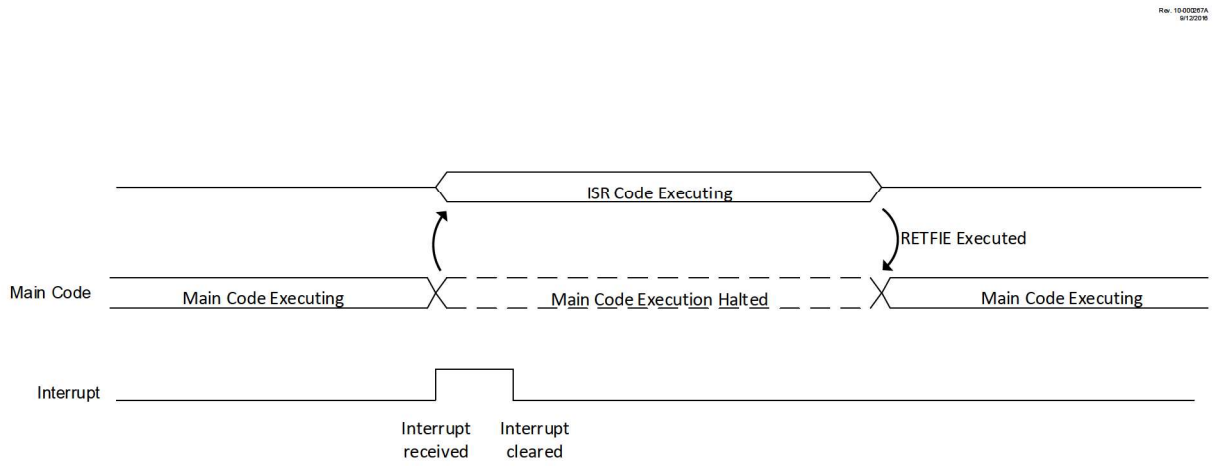

11.5.2 Serving a High-Priority Interrupt while a Low-Priority Interrupt is Pending

A high priority interrupt request will always take precedence over any interrupt of a lower priority. The high-priority interrupt is acknowledged first, then the low-priority interrupt is acknowledged. Upon a return from the high-priority ISR (by executing the `RETFIE` instruction), the low-priority interrupt is serviced.

If any other high-priority interrupts are pending and enabled, they are serviced before servicing the pending low-priority interrupt. If no other high-priority interrupt requests are active, the low-priority interrupt is serviced.

Figure 11-3. Interrupt Execution: High-Priority Interrupt with a Low-Priority Interrupt Pending

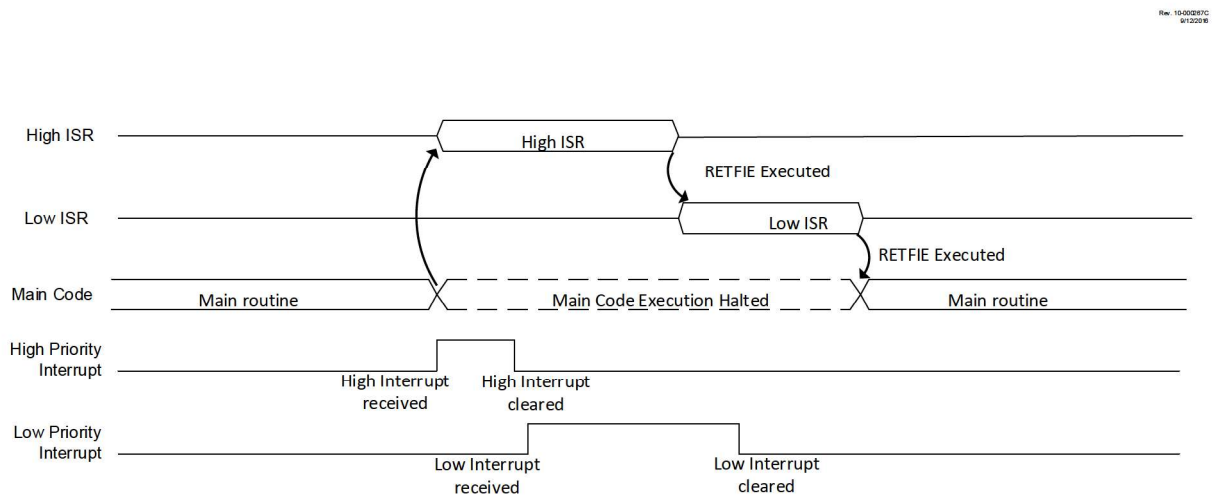

11.5.3 Preempting Low-Priority Interrupts

Low-priority interrupts can be preempted by high-priority interrupts. While in the low-priority ISR, if a high-priority interrupt arrives, the high-priority interrupt request is generated and the low-priority ISR is suspended, while the high-priority ISR is executed.

After the high-priority ISR is complete and if any other high-priority interrupt requests are not active, the execution returns to the preempted low-priority ISR.

Figure 11-4. Interrupt Execution: High-Priority Interrupt Preempting Low-Priority Interrupts

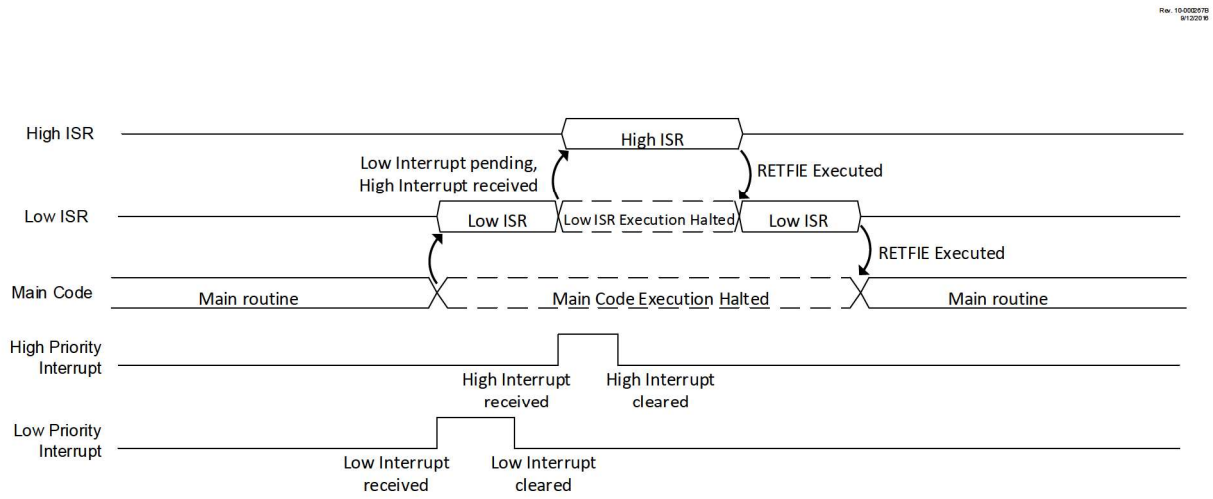

11.5.4 Simultaneous High- and Low-Priority Interrupts

When both high- and low-priority interrupts are active in the same instruction cycle (i.e., simultaneous interrupt events), both the high- and low-priority requests are generated. The high-priority ISR is serviced first before servicing the low-priority interrupt.

Figure 11-5. Interrupt Execution: Simultaneous High- and Low- Priority Interrupts

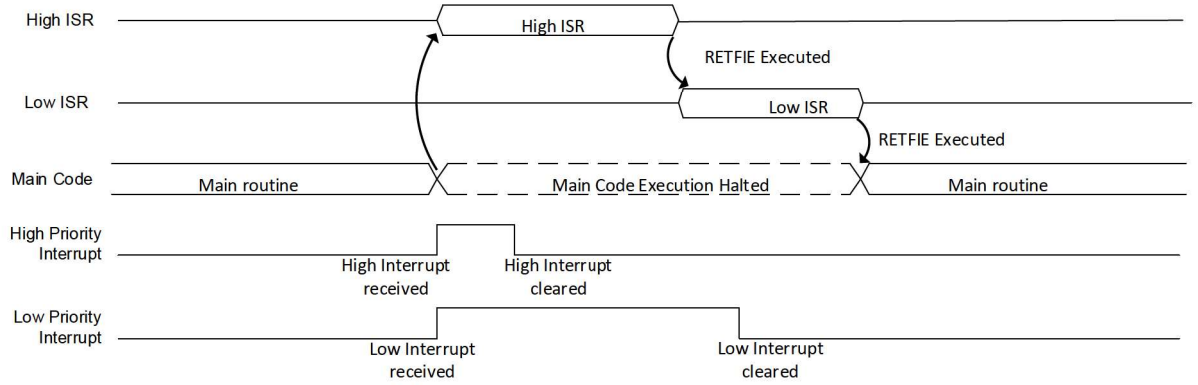

11.6 Context Saving

The interrupt controller supports a two-level deep context saving system (main routine context and low ISR context). Refer to the state machine shown in Figure 11-6 for details.

The Program Counter (PC) is saved on the dedicated device PC stack. The CPU registers saved include STATUS, WREG, BSR, FSR0/1/2, PRODL/H and PCLATH/U.

After WREG has been saved to the context registers, the resolved vector number of the interrupt source to be serviced is copied into WREG. Context save and restore operation is completed by the interrupt controller based on the current state of the interrupts and the order in which they were sent to the CPU.

Context save/restore works the same way in both states of MVECEN. When IPEN = 0, there is only one level of interrupt active. Hence, only the main context is saved when an interrupt is received.

11.6.1 Accessing Shadow Registers

The interrupt controller automatically saves the context information in the shadow registers. Both the saved context values (i.e., main routine and low ISR) can be accessed using the same set of shadow registers. By clearing SHADLO, the CPU register values saved for main routine context can be accessed. Low ISR context is automatically restored to the CPU registers upon exiting the high ISR. Similarly, the main context is automatically restored to the CPU registers upon exiting the low ISR.

The shadow registers are readable and writable, so if the user desires to modify the context, then the corresponding shadow register should be modified and the value will be restored when exiting the ISR. Depending on the user's application, other registers may also need to be saved.

Figure 11-6. Context Save State Machine Diagram

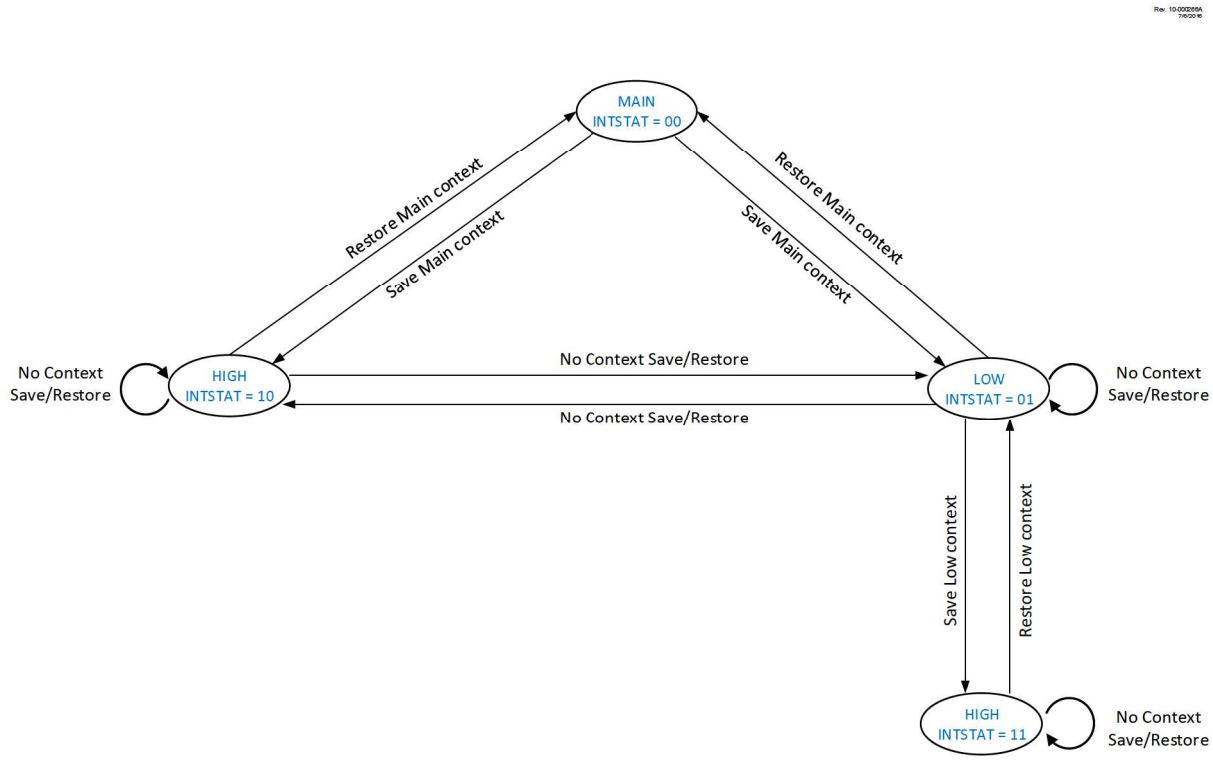

11.7 Returning from Interrupt Service Routine (ISR)

The "Return from Interrupt" instruction (RETFIE) is used to mark the end of an ISR.

When the RETFIE 1 instruction is executed, the PC is loaded with the saved PC value from the top of the PC stack. Saved context is also restored with the execution of this instruction. Thus, execution returns to the state of operation that existed before the interrupt occurred.

When the RETFIE 0 instruction is executed, the saved context is not restored back to the registers.

11.8 Interrupt Latency

When MVECEN = 1, there is a fixed latency of three instruction cycles between the completion of the instruction active when the interrupt occurred, and the first instruction of the Interrupt Service Routine. Figure 11-7, Figure 11-8,

and Figure 11-9 illustrate the sequence of events when a peripheral interrupt is asserted, when the last executed instruction is one-cycle, two-cycle and three-cycle, respectively.

After the Interrupt Flag Status bit is set, the current instruction completes executing. In the first latency cycle, the contents of the PC, STATUS, WREG, BSR, FSR0/1/2, PRODL/H and PCLATH/U registers are context saved and the IVTBASE + Vector number is calculated. In the second latency cycle, the PC is loaded with the calculated vector table address for the interrupt source and the starting address of the ISR is fetched. In the third latency cycle, the PC is loaded with the ISR address. All the latency cycles are executed as NOP instructions.

When MVECEN = 0, the interrupt controller requires two clock cycles to vector to the ISR from the main routine. Note that as this mode requires additional software to determine which interrupt source caused the interrupt, the actual latency between the trigger and the beginning of the specific ISR for each individual interrupt will be longer than two clock cycles and will vary, when not using vectored interrupts.

Figure 11-7. Interrupt Timing Diagram: One-Cycle Instruction

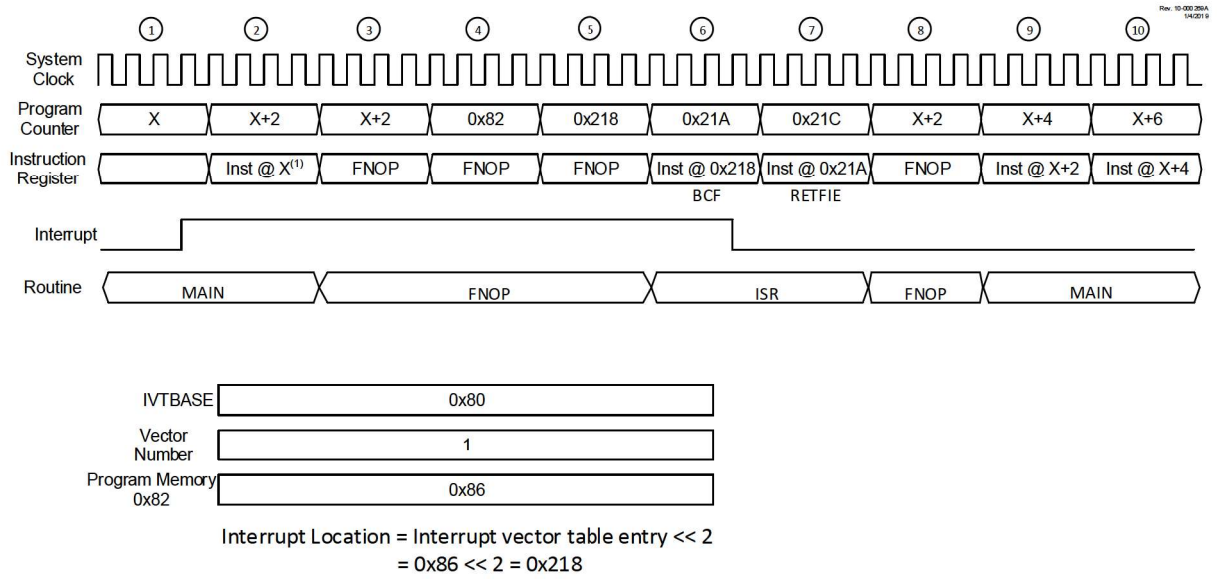

Note: 1. Instruction @ X is a One-cycle Instruction

Figure 11-8. Interrupt Timing Diagram: Two-Cycle Instruction

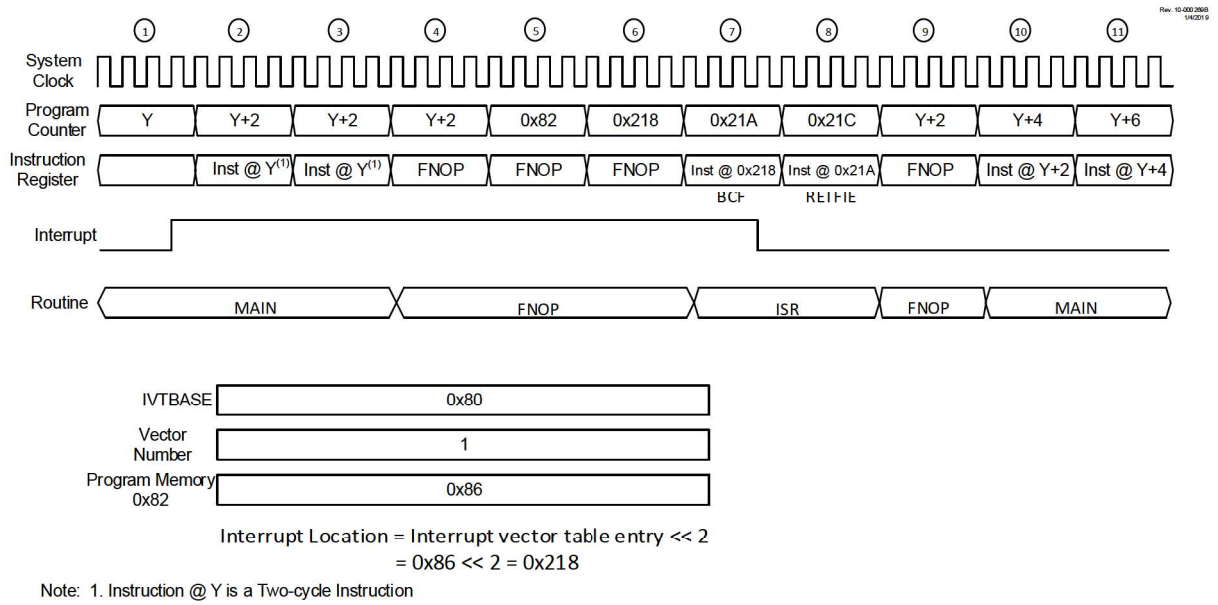

Note: 1. Instruction @ Y is a Two-cycle Instruction

Figure 11-9. Interrupt Timing Diagram: Three-Cycle Instruction

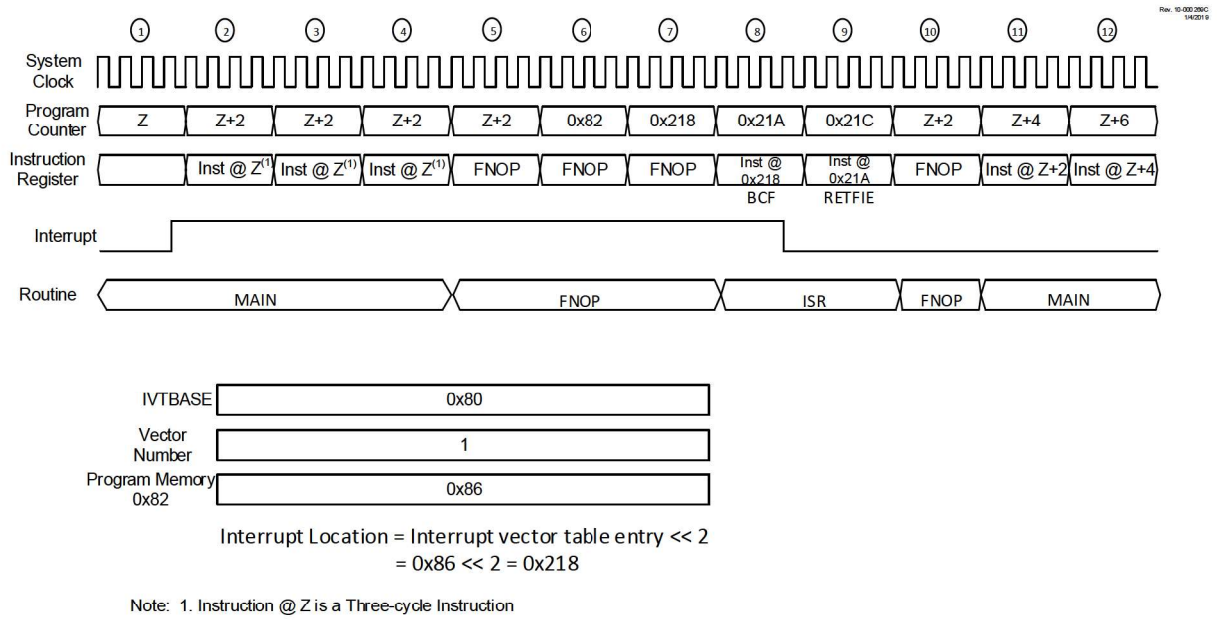

Note: 1. Instruction @ Z is a Three-cycle Instruction

11.8.1 Aborting Interrupts

If the last instruction before the interrupt controller vectors to the ISR from the main routine clears the GIE, PIE, or PIR bit associated with the interrupt, the controller executes one forced NOP instruction cycle before it returns to the main routine.

Figure 11-10 illustrates the sequence of events when a peripheral interrupt is asserted and then cleared on the last executed instruction cycle.

If the GIE, PIE or PIR bit associated with the interrupt is cleared prior to vectoring to the ISR, then the controller continues executing the main routine.

Figure 11-10. Interrupt Timing Diagram: Aborting Interrupts

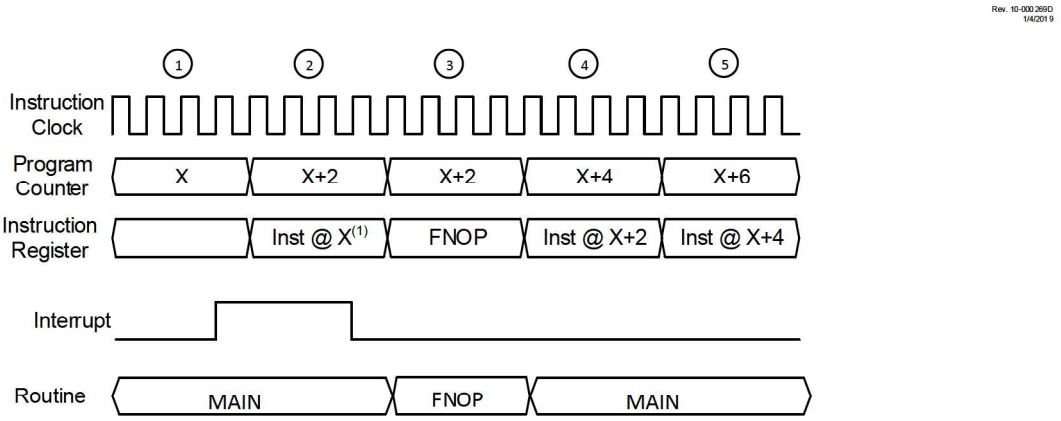

Note: 1: Inst @ X clears the interrupt flag, Example BCF INTCON0, GIE

11.9 Interrupt Setup Procedure

1. When using interrupt priority levels, set IPEN and then select the user-assigned priority level for the interrupt source by writing the control bits in the appropriate IPRx control register.

Important: At a device Reset, the IPRx registers are initialized such that all user interrupt sources are assigned to high priority.

2. Clear the Interrupt Flag Status bit associated with the peripheral in the associated PIRx STATUS register.
3. Enable the interrupt source by setting the interrupt enable control bit associated with the source in the appropriate PIEx register.
4. If the vector table is used (MVECEN = 1), then setup the start address for the Interrupt Vector Table using IVTBASE. See Interrupt Vector Table Contents section for more details.
5. Once IVTBASE is written to, set the interrupt enable bits in INTCON0.
6. An example of setting up interrupts and ISRs using assembly and C can be found in Example 11-3 and Example 11-4.

Example 11-3. Setting up Vectored Interrupts using MPASM

```
; Each ISR routine must have a predetermined origin otherwise there will be
; an assembly error because the address is not determined until link time
; which is too late to do the divide by 4 math on the address.
; Predetermined addresses must be evenly divisible by 4.

ISRSW CODE 0x3E00
; SW interrupt service code here.
    BANKSEL    PIR0
    BCF        PIR0, SWIF
    RETFIE     FAST

ISRHLVD    CODE 0x3E40
; HLVD interrupt service code here.
    BANKSEL    PIR0
    BCF        PIR0, HLVDIF
    RETFIE     FAST

ISROSF    CODE 0x3E60
; OSF interrupt service code here.
    BANKSEL    PIR0
    BCF        PIR0, OSFIF
    RETFIE     FAST

IntInit:
    ; Disable all interrupts
    BCF        INTCON0, GIE, ACCESS

    ; Set IVTBASE (optional - default is 0x000008)
    CLRF        IVTBASEU, ACCESS
    MOVLW       0x3F
    MOVWF       IVTBASEH, ACCESS
    CLRF        IVTBASEL, ACCESS

    ; Clear any interrupt flags before enabling interrupts
    BANKSEL     PIR0
    BCF         PIR0, SWIF
    BCF         PIR0, HLVDIF
    BCF         PIR0, OSFIF

    ; Enable interrupts
    BANKSEL     PIE0
    BSF         PIE0, SWIE
    BSF         PIE0, HLVDIE
    BSF         PIE0, OSFIE

    ; Set interrupt priorities if necessary
    BANKSEL     IPR0
    BSF         INTCON0, IPEN_INTCON0, ACCESS    ; Enable interrupt priority
    BCF         IPR0, HLVDIP        ; Make HLVD interrupt low priority

    ; Enable interrupts
    BSF         INTCON0, GIEH, ACCESS
    BSF         INTCON0, GIEL, ACCESS

    RETURN 1

; Save SWISR in vector table (IVTBASE+0*2)
ISR1    CODE 0x3F00
        DW    (0x3E40>>2)        ; (SWISR/4)

; Save HLVDISR in vector table (IVTBASE+1*2)
ISR2    CODE 0x3F02
        DW    (0x3E60>>2)        ; (HLVDISR/4)

; Save CLC2ISR in vector table (IVTBASE+2*2)
ISR3    CODE 0x3F04
        DW    (0x3E00>>2)        ; (OSFISR/4)
```

Example 11-4. Setting up Vectored Interrupts using XC8

```
// NOTE 1: If IVTBASE is changed from its default value of 0x000008, then the
// "base(...)" argument must be provided in the ISR. Otherwise the vector
// table will be placed at 0x0008 by default regardless of the IVTBASE value.

// NOTE 2: When MVECEN=0 and IPEN=1, a separate argument as "high_priority"
// or "low_priority" can be used to distinguish between the two ISRs.
// If the argument is not provided, the ISR is considered high priority
// by default.

// NOTE 3: Multiple interrupts can be handled by the same ISR if they are
// specified in the "irq(...)" argument. Ex: irq(IRQ_SW, IRQ_HLVD)

void __interrupt(irq(IRQ_SW), base(0x3008)) SW_ISR(void)
{
    PIR0bits.SWIF = 0;    // Clear the interrupt flag
    LATCbits.LATC0 ^= 1;    // ISR code goes here
}
void __interrupt(irq(default), base(0x3008)) DEFAULT_ISR(void)
{
    // Unhandled interrupts go here
}
void INTERRUPT_Initialize (void)
{
    INTCON0bits.GIEH = 1;    // Enable high priority interrupts
    INTCON0bits.GIEL = 1;    // Enable low priority interrupts
    INTCON0bits.IPEN = 1;    // Enable interrupt priority
    PIE0bits.SWIE = 1;     // Enable SW interrupt
    PIE0bits.HLVDIE = 1;     // Enable HLVD interrupt
    IPR0bits.SWIP = 0;     // Make SW interrupt low priority

    // Change IVTBASE if required
    IVTBASEU = 0x00;          // Optional
    IVTBASEH = 0x30;          // Default is 0x000008
    IVTBASEL = 0x08;
}
```

11.10 External Interrupt Pins

Devices may have several external interrupt sources that can be assigned to pins on different ports based on PPS settings. Refer to the **"PPS - Peripheral Pin Select Module"** chapter for possible routing options for these external interrupts. The external interrupt sources are edge-triggered. If the corresponding INTxEDG bit in INTCON0 is set, the interrupt is triggered by a rising edge. If the bit is clear, the trigger is on the falling edge.

When a valid edge appears on the INTx pin, the corresponding flag bit (INTxF in the PIRx registers) is set. This interrupt can be disabled by clearing the corresponding enable bit, INTxE. The flag bit INTxF must be cleared by software in the Interrupt Service Routine before re-enabling the interrupt.

All external interrupts can wake up the processor from Idle or Sleep modes if bit INTxE was set prior to going into those modes. If GIE/GIEH bit is set, the processor will branch to the interrupt vector following wake-up. Interrupt priority is determined by the value contained in the respective INTxIP interrupt priority bits of the IPRx registers.

11.11 Wake-up from Sleep

The interrupt controller provides a wake-up request to the CPU whenever an interrupt event occurs, if the interrupt event is enabled. This occurs regardless of whether the part is in Run, Idle/Doze or Sleep modes. The status of GIE/GIEH and GIEL bits have no effect on the wake-up request. This wake-up request is asynchronous to all clocks.

11.12 Interrupt Compatibility

When the MVECEN bit is cleared, the IVT feature is disabled and interrupts are compatible with previous high performance 8-bit PIC18 microcontroller devices. In this mode, the IVT priority has no effect.

When IPEN is also cleared, the interrupt priority feature is disabled and interrupts are compatible with PIC16 microcontroller midrange devices. All interrupts branch to address 0008h, since the interrupt priority is disabled.

11.13 Register Definitions: Interrupt Control

11.13.1 INTCON0

Name: INTCON0
Address: 0x4D6

Interrupt Control Register 0

Bit	7	6	5	4	3	2	1	0
	GIE/GIEH	GIEL	IPEN			INT2EDG	INT1EDG	INT0EDG
Access	R/W	R/W	R/W			R/W	R/W	R/W
Reset	0	0	0			1	1	1

Bit 7 – GIE/GIEH Global Interrupt Enable

Value	Condition	Description
1	IPEN = 0	Enables all masked interrupts
0	IPEN = 0	Disables all interrupts
1	IPEN = 1	Enables all unmasked high-priority interrupts: bit also needs to be set for enabling low-priority interrupts
0	IPEN = 1	Disables all interrupts

Bit 6 – GIEL Global Low Priority Interrupt Enable

Value	Condition	Description
n	IPEN = 0	Reserved, read as 0
1	IPEN = 1	Enables all unmasked low-priority interrupts, GIEH also needs to be set for low priority interrupts
0	IPEN = 1	Disables all low priority interrupts

Bit 5 – IPEN Interrupt Priority Enable

Value	Description
1	Enable priority levels on interrupts
0	Disable priority levels on interrupts, all interrupts are treated as high priority interrupts

Bit 2 – INT2EDG External Interrupt 2 Edge Select

Value	Description
1	Interrupt on rising edge of INT2 pin
0	Interrupt on falling edge of INT2 pin

Bit 1 – INT1EDG External Interrupt 1 Edge Select

Value	Description
1	Interrupt on rising edge of INT1 pin
0	Interrupt on falling edge of INT1 pin

Bit 0 – INT0EDG External Interrupt 0 Edge Select

Value	Description
1	Interrupt on rising edge of INT0 pin
0	Interrupt on falling edge of INT0 pin

11.13.2 INTCON1

Name: INTCON1
Address: 0x4D7

Interrupt Control Register 1

Bit	7	6	5	4	3	2	1	0
	STAT[1:0]							
Access	R	R						
Reset	0	0						

Bits 7:6 – STAT[1:0] Interrupt State Status

Value	Description
11	High priority ISR executing, high-priority interrupt was received while a low-priority ISR was executing
10	High priority ISR executing, high-priority interrupt was received in main routine
01	Low priority ISR executing, low-priority interrupt was received in main routine
00	Main routine executing

11.13.3 IVTBASE

Name: IVTBASE
Address: 0x45D

Interrupt Vector Table Base Address Register

Bit	23	22	21	20	19	18	17	16
				IVTBASEU[4:0]				
Access				R/W	R/W	R/W	R/W	R/W
Reset				0	0	0	0	0

Bit	15	14	13	12	11	10	9	8
	IVTBASEH[7:0]							
Access	R/W	R/W	R/W	R/W	R/W	R/W	R/W	R/W
Reset	0	0	0	0	0	0	0	0

Bit	7	6	5	4	3	2	1	0
	IVTBASEL[7:0]							
Access	R/W	R/W	R/W	R/W	R/W	R/W	R/W	R/W
Reset	0	0	0	0	0	0	0	0

Bits 20:16 – IVTBASEU[4:0] Interrupt Vector Table Base Address Most Significant 5 bits

Bits 15:8 – IVTBASEH[7:0] Interrupt Vector Table Base Address Middle 8 bits

Bits 7:0 – IVTBASEL[7:0] Interrupt Vector Table Base Address Least Significant 8 bits

11.13.4 IVTAD

Name: IVTAD
Address: 0x45A

Interrupt Vector Table Address

Bit	23	22	21	20	19	18	17	16
				IVTADU[4:0]				
Access				R	R	R	R	R
Reset				0	0	0	0	0

Bit	15	14	13	12	11	10	9	8
	IVTADH[7:0]							
Access	R	R	R	R	R	R	R	R
Reset	0	0	0	0	0	0	0	0

Bit	7	6	5	4	3	2	1	0
	IVTADL[7:0]							
Access	R	R	R	R	R	R	R	R
Reset	0	0	0	0	0	0	0	0

Bits 20:16 – IVTADU[4:0] Interrupt Vector Table Address Most Significant 5 bits

Bits 15:8 – IVTADH[7:0] Interrupt Vector Table Address Middle 8 bits

Bits 7:0 – IVTADL[7:0] Interrupt Vector Table Address Least Significant 8 bits

11.13.5 IVTLOCK

Name: IVTLOCK
Address: 0x459

Interrupt Vector Table Lock Register

Bit	7	6	5	4	3	2	1	0
								IVTLOCKED
Access								R/W
Reset								0

Bit 0 – IVTLOCKED IVT Registers Lock(1,2)

Value	Description
1	IVTBASE Registers are locked and cannot be written
0	IVTBASE Registers can be modified by write operations

Notes:

1. The IVTLOCKED bit can only be set or cleared after the unlock sequence in Example 11-1.
2. If IVT1WAY = 1, the IVTLOCKED bit cannot be cleared after it has been set.

11.13.6 SHADCON

Name: SHADCON
Address: 0x376

Shadow Control Register

Bit	7	6	5	4	3	2	1	0
								SHADLO
Access								R/W
Reset								0

Bit 0 – SHADLO Interrupt Shadow Register Access Switch

Value	Description
1	Access Main Context for Interrupt Shadow registers
0	Access Low-Priority Interrupt Context for Interrupt Shadow registers

11.13.7 PIE0

Name: PIE0
Address: 0x4A8

Peripheral Interrupt Enable Register 0

Bit	7	6	5	4	3	2	1	0
	IOCIE	CRCIE	CLC1IE	NVMIE	CSWIE	OSFIE	HLVDIE	SWIE
Access	R/W	R/W	R/W	R/W	R/W	R/W	R/W	R/W
Reset	0	0	0	0	0	0	0	0

Bit 7 – IOCIE Interrupt-on-Change Enable

Value	Description
1	Enabled
0	Disabled

Bit 6 – CRCIE CRC Interrupt Enable

Value	Description
1	Enabled
0	Disabled

Bit 5 – CLC1IE CLC1 Interrupt Enable

Value	Description
1	Enabled
0	Disabled

Bit 4 – NVMIE NVM Interrupt Enable

Value	Description
1	Enabled
0	Disabled

Bit 3 – CSWIE Clock Switch Interrupt Enable

Value	Description
1	Enabled
0	Disabled

Bit 2 – OSFIE Oscillator Failure Interrupt Enable

Value	Description
1	Enabled
0	Disabled

Bit 1 – HLVDIE High/Low-Voltage Detect Interrupt Enable

Value	Description
1	Enabled
0	Disabled

Bit 0 – SWIE Software Interrupt Enable

Value	Description
1	Enabled
0	Disabled

11.13.8 PIE1

Name: PIE1
Address: 0x4A9

Peripheral Interrupt Enable Register 1

Bit	7	6	5	4	3	2	1	0
	SMT1PWAIE	SMT1PRAIE	SMT1IE	CM1IE	ACTIE	ADIE	ZCDIE	INT0IE
Access	R/W	R/W	R/W	R/W	R/W	R/W	R/W	R/W
Reset	0	0	0	0	0	0	0	0

Bit 7 – SMT1PWAIE SMT1 Pulse-Width Acquisition Interrupt Enable

Value	Description
1	Enabled
0	Disabled

Bit 6 – SMT1PRAIE SMT1 Period Acquisition Interrupt Enable

Value	Description
1	Enabled
0	Disabled

Bit 5 – SMT1IE SMT1 Interrupt Enable

Value	Description
1	Enabled
0	Disabled

Bit 4 – CM1IE CMP1 Interrupt Enable

Value	Description
1	Enabled
0	Disabled

Bit 3 – ACTIE Active Clock Tuning Interrupt Enable

Value	Description
1	Enabled
0	Disabled

Bit 2 – ADIE ADC Interrupt Enable

Value	Description
1	Enabled
0	Disabled

Bit 1 – ZCDIE ZCD Interrupt Enable

Value	Description
1	Enabled
0	Disabled

Bit 0 – INT0IE External Interrupt 0 Interrupt Enable

Value	Description
1	Enabled
0	Disabled

11.13.9 PIE2

Name: PIE2
Address: 0x4AA

Peripheral Interrupt Enable Register 2

Bit	7	6	5	4	3	2	1	0
	DMA1AIE	DMA1ORIE	DMA1DCNTIE	DMA1SCNTIE				ADTIE
Access	R/W	R/W	R/W	R/W				R/W
Reset	0	0	0	0				0

Bit 7 – DMA1AIE DMA1 Abort Interrupt Enable

Value	Description
1	Enabled
0	Disabled

Bit 6 – DMA1ORIE DMA1 Overrun Interrupt Enable

Value	Description
0	Enabled
1	Disabled

Bit 5 – DMA1DCNTIE DMA1 Destination Count Interrupt Enable

Value	Description
0	Enabled
1	Disabled

Bit 4 – DMA1SCNTIE DMA1 Source Count Interrupt Enable

Value	Description
0	Enabled
1	Disabled

Bit 0 – ADTIE ADC Threshold Interrupt Enable

Value	Description
0	Enabled
1	Disabled

11.13.10 PIE3

Name: PIE3
Address: 0x4AB

Peripheral Interrupt Enable Register 3

Bit	7	6	5	4	3	2	1	0
	TMR0IE	CCP1IE	TMR1GIE	TMR1IE	TMR2IE	SPI1IE	SPI1TXIE	SPI1RXIE
Access	R/W	R/W	R/W	R/W	R/W	R/W	R/W	R/W
Reset	0	0	0	0	0	0	0	0

Bit 7 – TMR0IE TMR0 Interrupt Enable

Value	Description
1	Enabled
0	Disabled

Bit 6 – CCP1IE CCP1 Interrupt Enable

Value	Description
1	Enabled
0	Disabled

Bit 5 – TMR1GIE TMR1 Gate Interrupt Enable

Value	Description
1	Enabled
0	Disabled

Bit 4 – TMR1IE TMR1 Interrupt Enable

Value	Description
1	Enabled
0	Disabled

Bit 3 – TMR2IE TMR2 Interrupt Enable

Value	Description
1	Enabled
0	Disabled

Bit 2 – SPI1IE SPI1 Interrupt Enable

Value	Description
1	Enabled
0	Disabled

Bit 1 – SPI1TXIE SPI1 Transmit Interrupt Enable

Value	Description
1	Enabled
0	Disabled

Bit 0 – SPI1RXIE SPI1 Receive Interrupt Enable

Value	Description
1	Enabled
0	Disabled

11.13.11 PIE4

Name: PIE4
Address: 0x4AC

Peripheral Interrupt Enable Register 4

Bit	7	6	5	4	3	2	1	0
	PWM1IE	PWM1PIE	TMR3GIE	TMR3IE	U1IE	U1EIE	U1TXIE	U1RXIE
Access	R/W	R/W	R/W	R/W	R/W	R/W	R/W	R/W
Reset	0	0	0	0	0	0	0	0

Bit 7 – PWM1IE PWM1 Parameter Interrupt Enable

Value	Description
1	Enabled
0	Disabled

Bit 6 – PWM1PIE PWM1 Period Interrupt Enable

Value	Description
1	Enabled
0	Disabled

Bit 5 – TMR3GIE TMR3 Gate Interrupt Enable

Value	Description
1	Enabled
0	Disabled

Bit 4 – TMR3IE TMR3 Interrupt Enable

Value	Description
1	Enabled
0	Disabled

Bit 3 – U1IE UART1 Interrupt Enable

Value	Description
1	Enabled
0	Disabled

Bit 2 – U1EIE UART1 Framing Error Interrupt Enable

Value	Description
1	Enabled
0	Disabled

Bit 1 – U1TXIE UART1 Transmit Interrupt Enable

Value	Description
1	Enabled
0	Disabled

Bit 0 – U1RXIE UART 1 Receive Interrupt Enable

Value	Description
1	Enabled
0	Disabled

11.13.12 PIE5

Name: PIE5
Address: 0x4AD

Peripheral Interrupt Enable Register 5

Bit	7	6	5	4	3	2	1	0
	PWM2IE	PWM2PIE	CLC2IE	CM2IE		SPI2IE	SPI2TXIE	SPI2RXIE
Access	R/W	R/W	R/W	R/W		R/W	R/W	R/W
Reset	0	0	0	0		0	0	0

Bit 7 – PWM2IE PWM2 Parameter Interrupt Enable

Value	Description
1	Enabled
0	Disabled

Bit 6 – PWM2PIE PWM2 Period Interrupt Enable

Value	Description
1	Enabled
0	Disabled

Bit 5 – CLC2IE CLC2 Interrupt Enable

Value	Description
1	Enabled
0	Disabled

Bit 4 – CM2IE CMP2 Interrupt Enable

Value	Description
1	Enabled
0	Disabled

Bit 2 – SPI2IE SPI2 Interrupt Enable

Value	Description
1	Enabled
0	Disabled

Bit 1 – SPI2TXIE SPI2 Transmit Interrupt Enable

Value	Description
1	Enabled
0	Disabled

Bit 0 – SPI2RXIE SPI2 Receive Interrupt Enable

Value	Description
1	Enabled
0	Disabled

11.13.13 PIE6

Name: PIE6
Address: 0x4AE

Peripheral Interrupt Enable Register 6

Bit	7	6	5	4	3	2	1	0
	DMA2AIE	DMA2ORIE	DMA2DCNTIE	DMA2SCNTIE	NCO1IE	CWG1IE		INT1IE
Access	R/W	R/W	R/W	R/W	R/W	R/W		R/W
Reset	0	0	0	0	0	0		0

Bit 7 – DMA2AIE DMA2 Abort Interrupt Enable

Value	Description
1	Enabled
0	Disabled

Bit 6 – DMA2ORIE DMA2 Overrun Interrupt Enable

Value	Description
1	Enabled
0	Disabled

Bit 5 – DMA2DCNTIE DMA2 Destination Count Interrupt Enable

Value	Description
1	Enabled
0	Disabled

Bit 4 – DMA2SCNTIE DMA2 Source Count Interrupt Enable

Value	Description
1	Enabled
0	Disabled

Bit 3 – NCO1IE NCO1 Interrupt Enable

Value	Description
1	Enabled
0	Disabled

Bit 2 – CWG1IE CWG1 Interrupt Enable

Value	Description
1	Enabled
0	Disabled

Bit 0 – INT1IE External Interrupt 1 Interrupt Enable

Value	Description
1	Enabled
0	Disabled

11.13.14 PIE7

Name: PIE7
Address: 0x4AF

Peripheral Interrupt Enable Register 7

Bit	7	6	5	4	3	2	1	0
	PWM3IE	PWM3PIE	CLC3IE		I2C1EIE	I2C1IE	I2C1TXIE	I2C1RXIE
Access	R/W	R/W	R/W		R/W	R/W	R/W	R/W
Reset	0	0	0		0	0	0	0

Bit 7 – PWM3IE PWM3 Parameter Interrupt Enable

Value	Description
1	Enabled
0	Disabled

Bit 6 – PWM3PIE PWM3 Period Interrupt Enable

Value	Description
1	Enabled
0	Disabled

Bit 5 – CLC3IE CLC3 Interrupt Enable

Value	Description
1	Enabled
0	Disabled

Bit 3 – I2C1EIE I2C1 Error Interrupt Enable

Value	Description
1	Enabled
0	Disabled

Bit 2 – I2C1IE I2C1 Interrupt Enable

Value	Description
1	Enabled
0	Disabled

Bit 1 – I2C1TXIE I2C1 Transmit Interrupt Enable

Value	Description
1	Enabled
0	Disabled

Bit 0 – I2C1RXIE I2C1 Receive Interrupt Enable

Value	Description
1	Enabled
0	Disabled

11.13.15 PIE8

Name: PIE8
Address: 0x4B0

Peripheral Interrupt Enable Register 8

Bit	7	6	5	4	3	2	1	0
	SCANIE		CLC4IE		U2IE	U2EIE	U2TXIE	U2RXIE
Access	R/W		R/W		R/W	R/W	R/W	R/W
Reset	0		0		0	0	0	0

Bit 7 – SCANIE Memory Scanner Interrupt Enable

Value	Description
1	Enabled
0	Disabled

Bit 5 – CLC4IE CLC4 Interrupt Enable

Value	Description
1	Enabled
0	Disabled

Bit 3 – U2IE UART2 Interrupt Enable

Value	Description
1	Enabled
0	Disabled

Bit 2 – U2EIE UART2 Framing Error Interrupt Enable

Value	Description
1	Enabled
0	Disabled

Bit 1 – U2TXIE UART2 Transmit Interrupt Enable

Value	Description
1	Enabled
0	Disabled

Bit 0 – U2RXIE UART2 Receive Interrupt Enable

Value	Description
1	Enabled
0	Disabled

11.13.16 PIE9

Name: PIE9
Address: 0x4B1

Peripheral Interrupt Enable Register 9

Bit	7	6	5	4	3	2	1	0
	DMA3AIE	DMA3ORIE	DMA3DCNTIE	DMA3SCNTIE	U3IE	U3EIE	U3TXIE	U3RXIE
Access	R/W	R/W	R/W	R/W	R/W	R/W	R/W	R/W
Reset	0	0	0	0	0	0	0	0

Bit 7 – DMA3AIE DMA3 Abort Interrupt Enable

Value	Description
1	Enabled
0	Disabled

Bit 6 – DMA3ORIE DMA3 Overrun Interrupt Enable

Value	Description
1	Enabled
0	Disabled

Bit 5 – DMA3DCNTIE DMA3 Destination Count Interrupt Enable

Value	Description
1	Enabled
0	Disabled

Bit 4 – DMA3SCNTIE DMA3 Source Count Interrupt Enable

Value	Description
1	Enabled
0	Disabled

Bit 3 – U3IE UART3 Interrupt Enable

Value	Description
1	Enabled
0	Disabled

Bit 2 – U3EIE UART3 Framing Error Interrupt Enable

Value	Description
1	Enabled
0	Disabled

Bit 1 – U3TXIE UART3 Transmit Interrupt Enable

Value	Description
1	Enabled
0	Disabled

Bit 0 – U3RXIE UART3 Receive Interrupt Enable

Value	Description
1	Enabled
0	Disabled

11.13.17 PIE10

Name: PIE10
Address: 0x4B2

Peripheral Interrupt Enable Register 10

Bit	7	6	5	4	3	2	1	0
	DMA4AIE	DMA4ORIE	DMA4DCNTIE	DMA4SCNTIE	TMR4IE			INT2IE
Access	R/W	R/W	R/W	R/W	R/W			R/W
Reset	0	0	0	0	0			0

Bit 7 – DMA4AIE DMA4 Abort Interrupt Enable

Value	Description
1	Enabled
0	Disabled

Bit 6 – DMA4ORIE DMA4 Overrun Interrupt Enable

Value	Description
1	Enabled
0	Disabled

Bit 5 – DMA4DCNTIE DMA4 Destination Count Interrupt Enable

Value	Description
1	Enabled
0	Disabled

Bit 4 – DMA4SCNTIE DMA4 Source Count Interrupt Enable

Value	Description
1	Enabled
0	Disabled

Bit 3 – TMR4IE TMR4 Interrupt Enable

Value	Description
1	Enabled
0	Disabled

Bit 0 – INT2IE External Interrupt 2 Interrupt Enable

Value	Description
1	Enabled
0	Disabled

11.13.18 PIR0

Name: PIR0
Address: 0x4B3

Peripheral Interrupt Request Register 0

Bit	7	6	5	4	3	2	1	0
	IOCIF	CRCIF	CLC1IF	NVMIF	CSWIF	OSFIF	HLVDIF	SWIF
Access	R	R/W/HS	R/W/HS	R/W/HS	R/W/HS	R/W/HS	R/W/HS	R/W
Reset	0	0	0	0	0	0	0	0

Bit 7 – IOCIF Interrupt-on-Change Interrupt Flag(2)

Value	Description
1	Interrupt has occurred
0	Interrupt event has not occurred

Bit 6 – CRCIF CRC Interrupt Flag

Value	Description
1	Interrupt has occurred (must be cleared by software)
0	Interrupt event has not occurred

Bit 5 – CLC1IF CLC1 Interrupt Flag

Value	Description
1	Interrupt has occurred (must be cleared by software)
0	Interrupt event has not occurred

Bit 4 – NVMIF NVM Interrupt Flag

Value	Description
1	Interrupt has occurred (must be cleared by software)
0	Interrupt event has not occurred

Bit 3 – CSWIF Clock Switch Interrupt Flag(3)

Value	Description
1	Interrupt has occurred (must be cleared by software)
0	Interrupt event has not occurred

Bit 2 – OSFIF Oscillator Failure Interrupt Flag

Value	Description
1	Interrupt has occurred (must be cleared by software)
0	Interrupt event has not occurred

Bit 1 – HLVDIF High/Low-Voltage Detect Interrupt Flag

Value	Description
1	Interrupt has occurred (must be cleared by software)
0	Interrupt event has not occurred

Bit 0 – SWIF Software Interrupt Flag

Value	Description
1	Interrupt will trigger (bit is set and cleared by user software)
0	Interrupt event has not occurred

Notes:

1. Interrupt flag bits get set when an interrupt condition occurs, regardless of the state of its corresponding enable bit, or the global enable bit. User software should ensure the appropriate interrupt flag bits are clear prior to enabling an interrupt.
2. IOCIF is a read-only bit. To clear the interrupt condition, all bits in the IOCxF registers must be cleared.
3. The CSWIF interrupt will not wake the system from Sleep. The system will Sleep until another interrupt causes the wake-up.

11.13.19 PIR1

Name: PIR1
Address: 0x4B4

Peripheral Interrupt Request Register 1

Bit	7	6	5	4	3	2	1	0
	SMT1PWAIF	SMT1PRAIF	SMT1IF	CM1IF	ACTIF	ADIF	ZCDIF	INT0IF
Access	R/W/HS	R/W/HS	R/W/HS	R/W/HS	R/W/HS	R/W/HS	R/W/HS	R/W/HS
Reset	0	0	0	0	0	0	0	0

Bit 7 – SMT1PWAIF SMT1 Pulse-Width Acquisition Interrupt Flag

Value	Description
1	Interrupt has occurred (must be cleared by software)
0	Interrupt event has not occurred

Bit 6 – SMT1PRAIF SMT1 Period Acquisition Interrupt Flag

Value	Description
1	Interrupt has occurred (must be cleared by software)
0	Interrupt event has not occurred

Bit 5 – SMT1IF SMT1 Interrupt Flag

Value	Description
1	Interrupt has occurred (must be cleared by software)
0	Interrupt event has not occurred

Bit 4 – CM1IF CMP1 Interrupt Flag

Value	Description
1	Interrupt has occurred (must be cleared by software)
0	Interrupt event has not occurred

Bit 3 – ACTIF Active Clock Tuning Interrupt Flag

Value	Description
1	Interrupt has occurred (must be cleared by software)
0	Interrupt event has not occurred

Bit 2 – ADIF ADC Interrupt Flag

Value	Description
1	Interrupt has occurred (must be cleared by software)
0	Interrupt event has not occurred

Bit 1 – ZCDIF ZCD Interrupt Flag

Value	Description
1	Interrupt has occurred (must be cleared by software)
0	Interrupt event has not occurred

Bit 0 – INT0IF External Interrupt 0 Interrupt Flag(2)

Value	Description
1	Interrupt has occurred (must be cleared by software)
0	Interrupt event has not occurred

Notes:

1. Interrupt flag bits get set when an interrupt condition occurs, regardless of the state of its corresponding enable bit, or the global enable bit. User software should ensure the appropriate interrupt flag bits are clear prior to enabling an interrupt.
2. The external interrupt GPIO pin is selected by the INTxPPS register.

11.13.20 PIR2

Name: PIR2
Address: 0x4B5

Peripheral Interrupt Request Register 2

Bit	7	6	5	4	3	2	1	0
	DMA1AIF	DMA1ORIF	DMA1DCNTIF	DMA1SCNTIF				ADTIF
Access	R/W/HS	R/W/HS	R/W/HS	R/W/HS				R/W/HS
Reset	0	0	0	0				0

Bit 7 – DMA1AIF DMA1 Abort Interrupt Flag

Value	Description
1	Interrupt has occurred (must be cleared by software)
0	Interrupt event has not occurred

Bit 6 – DMA1ORIF DMA1 Overrun Interrupt Flag

Value	Description
0	Interrupt event has not occurred
1	Interrupt has occurred

Bit 5 – DMA1DCNTIF DMA1 Destination Count Interrupt Flag

Value	Description
0	Interrupt event has not occurred
1	Interrupt has occurred

Bit 4 – DMA1SCNTIF DMA1 Source Count Interrupt Flag

Value	Description
0	Interrupt event has not occurred
1	Interrupt has occurred

Bit 0 – ADTIF ADC Threshold Interrupt Flag

Value	Description
0	Interrupt event has not occurred
1	Interrupt has occurred

Note:

1. Interrupt flag bits get set when an interrupt condition occurs, regardless of the state of its corresponding enable bit, or the global enable bit. User software should ensure the appropriate interrupt flag bits are clear prior to enabling an interrupt.

11.13.21 PIR3

Name: PIR3
Address: 0x4B6

Peripheral Interrupt Request Register 3

Bit	7	6	5	4	3	2	1	0
	TMR0IF	CCP1IF	TMR1GIF	TMR1IF	TMR2IF	SPI1IF	SPI1TXIF	SPI1RXIF
Access	R/W/HS	R/W/HS	R/W/HS	R/W/HS	R/W/HS	R	R	R
Reset	0	0	0	0	0	0	0	0

Bit 7 – TMR0IF TMR0 Interrupt Flag

Value	Description
1	Interrupt has occurred (must be cleared by software)
0	Interrupt event has not occurred

Bit 6 – CCP1IF CCP1 Interrupt Flag

Value	Description
1	Interrupt has occurred (must be cleared by software)
0	Interrupt event has not occurred

Bit 5 – TMR1GIF TMR1 Gate Interrupt Flag

Value	Description
1	Interrupt has occurred (must be cleared by software)
0	Interrupt event has not occurred

Bit 4 – TMR1IF TMR1 Interrupt Flag

Value	Description
1	Interrupt has occurred (must be cleared by software)
0	Interrupt event has not occurred

Bit 3 – TMR2IF TMR2 Interrupt Flag

Value	Description
1	Interrupt has occurred (must be cleared by software)
0	Interrupt event has not occurred

Bit 2 – SPI1IF SPI1 Interrupt Flag(2)

Value	Description
1	Interrupt has occurred
0	Interrupt event has not occurred

Bit 1 – SPI1TXIF SPI1 Transmit Interrupt Flag(3)

Value	Description
1	Interrupt has occurred
0	Interrupt event has not occurred

Bit 0 – SPI1RXIF SPI1 Receive Interrupt Flag(3)

Value	Description
1	Interrupt has occurred
0	Interrupt event has not occurred

Notes:

1. Interrupt flag bits get set when an interrupt condition occurs, regardless of the state of its corresponding enable bit, or the global enable bit. User software should ensure the appropriate interrupt flag bits are clear prior to enabling an interrupt.
2. SPI1IF is a read-only bit. TO clear the interrupt condition, all bits in the SPI1INTF register must be cleared.
3. SPI1TXIF and SPI1RXIF are read-only bits and cannot be set/cleared by software.

11.13.22 PIR4

Name: PIR4
Address: 0x4B7

Peripheral Interrupt Request Register 4

Bit	7	6	5	4	3	2	1	0
	PWM1IF	PWM1PIF	TMR3GIF	TMR3IF	U1IF	U1EIF	U1TXIF	U1RXIF
Access	R	R/W/HS	R/W/HS	R/W/HS	R	R	R	R
Reset	0	0	0	0	0	0	0	0

Bit 7 – PWM1IF PWM1 Parameter Interrupt Flag(2)

Value	Description
1	Interrupt has occurred
0	Interrupt event has not occurred

Bit 6 – PWM1PIF PWM1 Period Interrupt Flag

Value	Description
1	Interrupt has occurred (must be cleared by software)
0	Interrupt event has not occurred

Bit 5 – TMR3GIF TMR3 Gate Interrupt Flag

Value	Description
1	Interrupt has occurred (must be cleared by software)
0	Interrupt event has not occurred

Bit 4 – TMR3IF TMR3 Interrupt Flag

Value	Description
1	Interrupt has occurred (must be cleared by software)
0	Interrupt event has not occurred

Bit 3 – U1IF UART1 Interrupt Flag(3)

Value	Description
1	Interrupt has occurred
0	Interrupt event has not occurred

Bit 2 – U1EIF UART1 Framing Error Interrupt Flag(4)

Value	Description
1	Interrupt has occurred
0	Interrupt event has not occurred

Bit 1 – U1TXIF UART1 Transmit Interrupt Flag(5)

Value	Description
1	Interrupt has occurred
0	Interrupt event has not occurred

Bit 0 – U1RXIF UART 1 Receive Interrupt Flag(5)

Value	Description
1	Interrupt has occurred
0	Interrupt event has not occurred

Notes:

1. Interrupt flag bits get set when an interrupt condition occurs, regardless of the state of its corresponding enable bit, or the global enable bit. User software should ensure the appropriate interrupt flag bits are clear prior to enabling an interrupt.
2. PWM1IF is a read-only bit. To clear the interrupt condition, all bits in the PWM1GIR register must be cleared.
3. U1IF is a read-only bit. To clear the interrupt condition, all bits in the U1UIR register must be cleared.
4. U1EIF is a read-only bit. To clear the interrupt condition, all bits in the U1ERR register must be cleared.
5. U1TXIF and U1RXIF are read-only bits and cannot be set/cleared by software.

11.13.23 PIR5

Name: PIR5
Address: 0x4B8

Peripheral Interrupt Request Register 5

Bit	7	6	5	4	3	2	1	0
	PWM2IF	PWM2PIF	CLC2IF	CM2IF		SPI2IF	SPI2TXIF	SPI2RXIF
Access	R	R/W/HS	R/W/HS	R/W/HS		R	R	R
Reset	0	0	0	0		0	0	0

Bit 7 – PWM2IF PWM2 Parameter Interrupt Flag(2)

Value	Description
1	Interrupt has occurred
0	Interrupt event has not occurred

Bit 6 – PWM2PIF PWM2 Period Interrupt Flag

Value	Description
1	Interrupt has occurred (must be cleared by software)
0	Interrupt event has not occurred

Bit 5 – CLC2IF CLC2 Interrupt Flag

Value	Description
1	Interrupt has occurred (must be cleared by software)
0	Interrupt event has not occurred

Bit 4 – CM2IF CMP2 Interrupt Flag

Value	Description
1	Interrupt has occurred (must be cleared by software)
0	Interrupt event has not occurred

Bit 2 – SPI2IF SPI2 Interrupt Flag(3)

Value	Description
1	Interrupt has occurred
0	Interrupt event has not occurred

Bit 1 – SPI2TXIF SPI2 Transmit Interrupt Flag(4)

Value	Description
1	Interrupt has occurred
0	Interrupt event has not occurred

Bit 0 – SPI2RXIF SPI2 Receive Interrupt Flag(4)

Value	Description
1	Interrupt has occurred
0	Interrupt event has not occurred

Notes:

1. Interrupt flag bits get set when an interrupt condition occurs, regardless of the state of its corresponding enable bit, or the global enable bit. User software should ensure the appropriate interrupt flag bits are clear prior to enabling an interrupt.
2. PWM2IF is a read-only bit. To clear the interrupt condition, all bits in the PWM2GIR register must be cleared.
3. SPI2IF is a read-only bit. TO clear the interrupt condition, all bits in the SPI2INTF register must be cleared.
4. SPI2TXIF and SPI2RXIF are read-only bits and cannot be set/cleared by software.

11.13.24 PIR6

Name: PIR6
Address: 0x4B9

Peripheral Interrupt Request Register 6

Bit	7	6	5	4	3	2	1	0
	DMA2AIF	DMA2ORIF	DMA2DCNTIF	DMA2SCNTIF	NCO1IF	CWG1IF		INT1IF
Access	R/W/HS	R/W/HS	R/W/HS	R/W/HS	R/W/HS	R/W/HS		R/W/HS
Reset	0	0	0	0	0	0		0

Bit 7 – DMA2AIF DMA2 Abort Interrupt Flag

Value	Description
1	Interrupt has occurred (must be cleared by software)
0	Interrupt event has not occurred

Bit 6 – DMA2ORIF DMA2 Overrun Interrupt Flag

Value	Description
1	Interrupt has occurred (must be cleared by software)
0	Interrupt event has not occurred

Bit 5 – DMA2DCNTIF DMA2 Destination Count Interrupt Flag

Value	Description
1	Interrupt has occurred (must be cleared by software)
0	Interrupt event has not occurred

Bit 4 – DMA2SCNTIF DMA2 Source Count Interrupt Flag

Value	Description
1	Interrupt has occurred (must be cleared by software)
0	Interrupt event has not occurred

Bit 3 – NCO1IF NCO1 Interrupt Flag

Value	Description
1	Interrupt has occurred (must be cleared by software)
0	Interrupt event has not occurred

Bit 2 – CWG1IF CWG1 Interrupt Flag

Value	Description
1	Interrupt has occurred (must be cleared by software)
0	Interrupt event has not occurred

Bit 0 – INT1IF External Interrupt 1 Interrupt Flag

Value	Description
1	Interrupt has occurred (must be cleared by software)
0	Interrupt event has not occurred

Note:

1. Interrupt flag bits get set when an interrupt condition occurs, regardless of the state of its corresponding enable bit, or the global enable bit. User software should ensure the appropriate interrupt flag bits are clear prior to enabling an interrupt.

11.13.25 PIR7

Name: PIR7
Address: 0x4BA

Peripheral Interrupt Request Register 7

Bit	7	6	5	4	3	2	1	0
	PWM3IF	PWM3PIF	CLC3IF		I2C1EIF	I2C1IF	I2C1TXIF	I2C1RXIF
Access	R	R/W/HS	R/W/HS		R	R	R	R
Reset	0	0	0		0	0	0	0

Bit 7 – PWM3IF PWM3 Parameter Interrupt Flag(2)

Value	Description
1	Interrupt has occurred
0	Interrupt event has not occurred

Bit 6 – PWM3PIF PWM3 Period Interrupt Flag

Value	Description
1	Interrupt has occurred (must be cleared by software)
0	Interrupt event has not occurred

Bit 5 – CLC3IF CLC3 Interrupt Flag

Value	Description
1	Interrupt has occurred (must be cleared by software)
0	Interrupt event has not occurred

Bit 3 – I2C1EIF I2C1 Error Interrupt Flag(3)

Value	Description
1	Interrupt has occurred
0	Interrupt event has not occurred

Bit 2 – I2C1IF I2C1 Interrupt Flag(4)

Value	Description
1	Interrupt has occurred
0	Interrupt event has not occurred

Bit 1 – I2C1TXIF I2C1 Transmit Interrupt Flag(5)

Value	Description
1	Interrupt has occurred
0	Interrupt event has not occurred

Bit 0 – I2C1RXIF I2C1 Receive Interrupt Flag(5)

Value	Description
1	Interrupt has occurred
0	Interrupt event has not occurred

Notes:

1. Interrupt flag bits get set when an interrupt condition occurs, regardless of the state of its corresponding enable bit, or the global enable bit. User software should ensure the appropriate interrupt flag bits are clear prior to enabling an interrupt.
2. PWM3IF is a read-only bit. To clear the interrupt condition, all bits in the PWM3GIR register must be cleared.
3. I2C1EIF is a read-only bit. To clear the interrupt condition, all bits in the I2C1ERR register must be cleared.
4. I2C1IF is a read-only bit. To clear the interrupt condition, all bits in the I2C1PIR register must be cleared.
5. I2C1TXIF and I2C1RXIF are read-only bits. To clear the interrupt condition, the CLRBF bit in I2C1STAT1 must be set.

11.13.26 PIR8

Name: PIR8
Address: 0x4BB

Peripheral Interrupt Request Register 8

Bit	7	6	5	4	3	2	1	0
	SCANIF		CLC4IF		U2IF	U2EIF	U2TXIF	U2RXIF
Access	R/W/HS		R/W/HS		R	R	R	R
Reset	0		0		0	0	0	0

Bit 7 – SCANIF Memory Scanner Interrupt Flag

Value	Description
1	Interrupt has occurred (must be cleared by software)
0	Interrupt event has not occurred

Bit 5 – CLC4IF CLC4 Interrupt Flag

Value	Description
1	Interrupt has occurred (must be cleared by software)
0	Interrupt event has not occurred

Bit 3 – U2IF UART2 Interrupt Flag(2)

Value	Description
1	Interrupt has occurred
0	Interrupt event has not occurred

Bit 2 – U2EIF UART2 Framing Error Interrupt Flag(3)

Value	Description
1	Interrupt has occurred
0	Interrupt event has not occurred

Bit 1 – U2TXIF UART2 Transmit Interrupt Flag(4)

Value	Description
1	Interrupt has occurred
0	Interrupt event has not occurred

Bit 0 – U2RXIF UART2 Receive Interrupt Flag(4)

Value	Description
1	Interrupt has occurred
0	Interrupt event has not occurred

Notes:

1. Interrupt flag bits get set when an interrupt condition occurs, regardless of the state of its corresponding enable bit, or the global enable bit. User software should ensure the appropriate interrupt flag bits are clear prior to enabling an interrupt.
2. U2IF is a read-only bit. To clear the interrupt condition, all bits in the U2UIR register must be cleared.
3. U2EIF is a read-only bit. To clear the interrupt condition, all bits in the U2ERR register must be cleared.
4. U2TXIF and U2RXIF are read-only bits and cannot be set/cleared by software.

11.13.27 PIR9

Name: PIR9
Address: 0x4BC

Peripheral Interrupt Request Register 9

Bit	7	6	5	4	3	2	1	0
	DMA3AIF	DMA3ORIF	DMA3DCNTIF	DMA3SCNTIF	U3IF	U3EIF	U3TXIF	U3RXIF
Access	R/W/HS	R/W/HS	R/W/HS	R/W/HS	R	R	R	R
Reset	0	0	0	0	0	0	0	0

Bit 7 – DMA3AIF DMA3 Abort Interrupt Flag

Value	Description
1	Interrupt has occurred (must be cleared by software)
0	Interrupt event has not occurred

Bit 6 – DMA3ORIF DMA3 Overrun Interrupt Flag

Value	Description
1	Interrupt has occurred (must be cleared by software)
0	Interrupt event has not occurred

Bit 5 – DMA3DCNTIF DMA3 Destination Count Interrupt Flag

Value	Description
1	Interrupt has occurred (must be cleared by software)
0	Interrupt event has not occurred

Bit 4 – DMA3SCNTIF DMA3 Source Count Interrupt Flag

Value	Description
1	Interrupt has occurred (must be cleared by software)
0	Interrupt event has not occurred

Bit 3 – U3IF UART3 Interrupt Flag(2)

Value	Description
1	Interrupt has occurred
0	Interrupt event has not occurred

Bit 2 – U3EIF UART3 Framing Error Interrupt Flag(3)

Value	Description
1	Interrupt has occurred
0	Interrupt event has not occurred

Bit 1 – U3TXIF UART3 Transmit Interrupt Flag(4)

Value	Description
1	Interrupt has occurred
0	Interrupt event has not occurred

Bit 0 – U3RXIF UART3 Receive Interrupt Flag(4)

Value	Description
1	Interrupt has occurred
0	Interrupt event has not occurred

Notes:

1. Interrupt flag bits get set when an interrupt condition occurs, regardless of the state of its corresponding enable bit, or the global enable bit. User software should ensure the appropriate interrupt flag bits are clear prior to enabling an interrupt.
2. U3IF is a read-only bit. To clear the interrupt condition, all bits in the U3UIR register must be cleared.
3. U3EIF is a read-only bit. To clear the interrupt condition, all bits in the U3ERR register must be cleared.
4. U3TXIF and U3RXIF are read-only bits and cannot be set/cleared by software.

11.13.28 PIR10

Name: PIR10
Address: 0x4BD

Peripheral Interrupt Request Register 10

Bit	7	6	5	4	3	2	1	0
	DMA4AIF	DMA4ORIF	DMA4DCNTIF	DMA4SCNTIF	TMR4IF			INT2IF
Access	R/W/HS	R/W/HS	R/W/HS	R/W/HS	R/W/HS			R/W/HS
Reset	0	0	0	0	0			0

Bit 7 – DMA4AIF DMA4 Abort Interrupt Flag

Value	Description
1	Interrupt has occurred (must be cleared by software)
0	Interrupt event has not occurred

Bit 6 – DMA4ORIF DMA4 Overrun Interrupt Flag

Value	Description
1	Interrupt has occurred (must be cleared by software)
0	Interrupt event has not occurred

Bit 5 – DMA4DCNTIF DMA4 Destination Count Interrupt Flag

Value	Description
1	Interrupt has occurred (must be cleared by software)
0	Interrupt event has not occurred

Bit 4 – DMA4SCNTIF DMA4 Source Count Interrupt Flag

Value	Description
1	Interrupt has occurred (must be cleared by software)
0	Interrupt event has not occurred

Bit 3 – TMR4IF TMR4 Interrupt Flag

Value	Description
1	Interrupt has occurred (must be cleared by software)
0	Interrupt event has not occurred

Bit 0 – INT2IF External Interrupt 2 Interrupt Flag

Value	Description
1	Interrupt has occurred (must be cleared by software)
0	Interrupt event has not occurred

Note:

1. Interrupt flag bits get set when an interrupt condition occurs, regardless of the state of its corresponding enable bit, or the global enable bit. User software should ensure the appropriate interrupt flag bits are clear prior to enabling an interrupt.

11.13.29 IPR0

Name: IPR0
Address: 0x367

Peripheral Interrupt Request Register 0

Bit	7	6	5	4	3	2	1	0
	IOCIP	CRCIP	CLC1IP	NVMIP	CSWIP	OSFIP	HLVDIP	SWIP
Access	R/W	R/W	R/W	R/W	R/W	R/W	R/W	R/W
Reset	1	0	1	1	1	1	1	1

Bit 7 – IOCIP Interrupt-on-Change Priority

Value	Description
1	High Priority
0	Low Priority

Bit 6 – CRCIP CRC Interrupt Priority

Value	Description
1	Interrupt has occurred (must be cleared by software)
0	Interrupt event has not occurred

Bit 5 – CLC1IP CLC1 Interrupt Priority

Value	Description
1	High Priority
0	Low Priority

Bit 4 – NVMIP NVM Interrupt Priority

Value	Description
1	High Priority
0	Low Priority

Bit 3 – CSWIP Clock Switch Interrupt Priority

Value	Description
1	High Priority
0	Low Priority

Bit 2 – OSFIP Oscillator Failure Interrupt Priority

Value	Description
1	High Priority
0	Low Priority

Bit 1 – HLVDIP High/Low-Voltage Detect Priority Flag

Value	Description
1	High Priority
0	Low Priority

Bit 0 – SWIP Software Interrupt Priority

Value	Description
1	High Priority
0	Low Priority

11.13.30 IPR1

Name: IPR1
Address: 0x368

Peripheral Interrupt Priority Register 1

Bit	7	6	5	4	3	2	1	0
	SMT1PWAIP	SMT1PRAIP	SMT1IP	CM1IP	ACTIP	ADIP	ZCDIP	INT0IP
Access	R/W	R/W	R/W	R/W	R/W	R/W	R/W	R/W
Reset	1	1	1	1	1	1	1	1

Bit 7 – SMT1PWAIP SMT1 Pulse-Width Acquisition Interrupt Priority

Value	Description
1	High Priority
0	Low Priority

Bit 6 – SMT1PRAIP SMT1 Period Acquisition Interrupt Priority

Value	Description
1	High Priority
0	Low Priority

Bit 5 – SMT1IP SMT1 Interrupt Priority

Value	Description
1	High Priority
0	Low Priority

Bit 4 – CM1IP CMP1 Interrupt Priority

Value	Description
1	High Priority
0	Low Priority

Bit 3 – ACTIP Active Clock Tuning Interrupt Priority

Value	Description
1	High Priority
0	Low Priority

Bit 2 – ADIP ADC Interrupt Priority

Value	Description
1	High Priority
0	Low Priority

Bit 1 – ZCDIP ZCD Interrupt Priority

Value	Description
1	High Priority
0	Low Priority

Bit 0 – INT0IP External Interrupt 0 Interrupt Priority

Value	Description
1	High Priority
0	Low Priority

11.13.31 IPR2

Name: IPR2
Address: 0x369

Peripheral Interrupt Priority Register 2

Bit	7	6	5	4	3	2	1	0
	DMA1AIP	DMA1ORIP	DMA1DCNTIP	DMA1SCNTIP				ADTIP
Access	R/W	R/W	R/W	R/W				R/W
Reset	1	1	1	1				1

Bit 7 – DMA1AIP DMA1 Abort Interrupt Priority

Value	Description
1	High Priority
0	Low Priority

Bit 6 – DMA1ORIP DMA1 Overrun Interrupt Priority

Value	Description
0	High Priority
1	Low Priority

Bit 5 – DMA1DCNTIP DMA1 Destination Count Interrupt Priority

Value	Description
0	High Priority
1	Low Priority

Bit 4 – DMA1SCNTIP DMA1 Source Count Interrupt Priority

Value	Description
0	High Priority
1	Low Priority

Bit 0 – ADTIP ADC Threshold Interrupt Priority

Value	Description
0	High Priority
1	Low Priority

11.13.32 IPR3

Name: IPR3
Address: 0x36A

Peripheral Interrupt Priority Register 3

Bit	7	6	5	4	3	2	1	0
	TMR0IP	CCP1IP	TMR1GIP	TMR1IP	TMR2IP	SPI1IP	SPI1TXIP	SPI1RXIP
Access	R/W	R/W	R/W	R/W	R/W	R/W	R/W	R/W
Reset	1	1	1	1	1	1	1	1

Bit 7 – TMR0IP TMR0 Interrupt Priority

Value	Description
1	High Priority
0	Low Priority

Bit 6 – CCP1IP CCP1 Interrupt Priority

Value	Description
1	High Priority
0	Low Priority

Bit 5 – TMR1GIP TMR1 Gate Interrupt Priority

Value	Description
1	High Priority
0	Low Priority

Bit 4 – TMR1IP TMR1 Interrupt Priority

Value	Description
1	High Priority
0	Low Priority

Bit 3 – TMR2IP TMR2 Interrupt Priority

Value	Description
1	High Priority
0	Low Priority

Bit 2 – SPI1IP SPI1 Interrupt Priority

Value	Description
1	High Priority
0	Low Priority

Bit 1 – SPI1TXIP SPI1 Transmit Interrupt Priority

Value	Description
1	High Priority
0	Low Priority

Bit 0 – SPI1RXIP SPI1 Receive Interrupt Priority

Value	Description
1	High Priority
0	Low Priority

11.13.33 IPR4

Name: IPR4
Address: 0x36B

Peripheral Interrupt Priority Register 4

Bit	7	6	5	4	3	2	1	0
	PWM1IP	PWM1PIP	TMR3GIP	TMR3IP	U1IP	U1EIP	U1TXIP	U1RXIP
Access	R/W	R/W	R/W	R/W	R/W	R/W	R/W	R/W
Reset	1	1	1	1	1	1	1	1

Bit 7 – PWM1IP PWM1 Parameter Interrupt Priority

Value	Description
1	High Priority
0	Low Priority

Bit 6 – PWM1PIP PWM1 Period Interrupt Priority

Value	Description
1	High Priority
0	Low Priority

Bit 5 – TMR3GIP TMR3 Gate Interrupt Priority

Value	Description
1	High Priority
0	Low Priority

Bit 4 – TMR3IP TMR3 Interrupt Priority

Value	Description
1	High Priority
0	Low Priority

Bit 3 – U1IP UART1 Interrupt Priority

Value	Description
1	High Priority
0	Low Priority

Bit 2 – U1EIP UART1 Framing Error Interrupt Priority

Value	Description
1	High Priority
0	Low Priority

Bit 1 – U1TXIP UART1 Transmit Interrupt Priority

Value	Description
1	High Priority
0	Low Priority

Bit 0 – U1RXIP UART 1 Receive Interrupt Priority

Value	Description
1	High Priority
0	Low Priority

11.13.34 IPR5

Name: IPR5
Address: 0x36C

Peripheral Interrupt Priority Register 5

Bit	7	6	5	4	3	2	1	0
	PWM2IP	PWM2PIP	CLC2IP	CMIP		SPI2IP	SPI2TXIP	SPI2RXIP
Access	R/W	R/W	R/W	R/W		R/W	R/W	R/W
Reset	1	1	1	1		1	1	1

Bit 7 – PWM2IP PWM2 Parameter Interrupt Priority

Value	Description
1	High Priority
0	Low Priority

Bit 6 – PWM2PIP PWM2 Period Interrupt Priority

Value	Description
1	High Priority
0	Low Priority

Bit 5 – CLC2IP CLC2 Interrupt Priority

Value	Description
1	High Priority
0	Low Priority

Bit 4 – CMIP CMP2 Interrupt Priority

Value	Description
1	High Priority
0	Low Priority

Bit 2 – SPI2IP SPI2 Interrupt Priority

Value	Description
1	High Priority
0	Low Priority

Bit 1 – SPI2TXIP SPI2 Transmit Interrupt Priority

Value	Description
1	High Priority
0	Low Priority

Bit 0 – SPI2RXIP SPI2 Receive Interrupt Priority

Value	Description
1	High Priority
0	Low Priority

11.13.35 IPR6

Name: IPR6
Address: 0x36D

Peripheral Interrupt Priority Register 6

Bit	7	6	5	4	3	2	1	0
	DMA2AIP	DMA2ORIP	DMA2DCNTIP	DMA2SCNTIP	NCO1IP	CWG1IP		INT1IP
Access	R/W	R/W	R/W	R/W	R/W	R/W		R/W
Reset	1	1	1	1	1	1		1

Bit 7 – DMA2AIP DMA2 Abort Interrupt Priority

Value	Description
1	High Priority
0	Low Priority

Bit 6 – DMA2ORIP DMA2 Overrun Interrupt Priority

Value	Description
1	High Priority
0	Low Priority

Bit 5 – DMA2DCNTIP DMA2 Destination Count Interrupt Priority

Value	Description
1	High Priority
0	Low Priority

Bit 4 – DMA2SCNTIP DMA2 Source Count Interrupt Priority

Value	Description
1	High Priority
0	Low Priority

Bit 3 – NCO1IP NCO1 Interrupt Priority

Value	Description
1	High Priority
0	Low Priority

Bit 2 – CWG1IP CWG1 Interrupt Priority

Value	Description
1	High Priority
0	Low Priority

Bit 0 – INT1IP External Interrupt 1 Interrupt Priority

Value	Description
1	High Priority
0	Low Priority

11.13.36 IPR7

Name: IPR7
Address: 0x36E

Peripheral Interrupt Priority Register 7

Bit	7	6	5	4	3	2	1	0
	PWM3IP	PWM3PIP	CLC3IP		I2C1EIP	I2C1IP	I2C1TXIP	I2C1RXIP
Access	R/W	R/W	R/W		R/W	R/W	R/W	R/W
Reset	1	1	1		1	1	1	1

Bit 7 – PWM3IP PWM3 Parameter Interrupt Priority

Value	Description
1	High Priority
0	Low Priority

Bit 6 – PWM3PIP PWM3 Period Interrupt Priority

Value	Description
1	High Priority
0	Low Priority

Bit 5 – CLC3IP CLC3 Interrupt Priority

Value	Description
1	High Priority
0	Low Priority

Bit 3 – I2C1EIP I2C1 Error Interrupt Priority

Value	Description
1	High Priority
0	Low Priority

Bit 2 – I2C1IP I2C1 Interrupt Priority

Value	Description
1	High Priority
0	Low Priority

Bit 1 – I2C1TXIP I2C1 Transmit Interrupt Priority

Value	Description
1	High Priority
0	Low Priority

Bit 0 – I2C1RXIP I2C1 Receive Interrupt Priority

Value	Description
1	High Priority
0	Low Priority

© 2020 Microchip Technology Inc.

11.13.37 IPR8

Name: IPR8
Address: 0x36F

Peripheral Interrupt Priority Register 8

Bit	7	6	5	4	3	2	1	0
	SCANIP		CLC4IP		U2IP	U2EIP	U2TXIP	U2RXIP
Access	R/W		R/W		R/W	R/W	R/W	R/W
Reset	1		1		1	1	1	1

Bit 7 – SCANIP Memory Scanner Interrupt Priority

Value	Description
1	High Priority
0	Low Priority

Bit 5 – CLC4IP CLC4 Interrupt Priority

Value	Description
1	High Priority
0	Low Priority

Bit 3 – U2IP UART2 Interrupt Priority

Value	Description
1	High Priority
0	Low Priority

Bit 2 – U2EIP UART2 Framing Error Interrupt Priority

Value	Description
1	High Priority
0	Low Priority

Bit 1 – U2TXIP UART2 Transmit Interrupt Priority

Value	Description
1	High Priority
0	Low Priority

Bit 0 – U2RXIP UART2 Receive Interrupt Priority

Value	Description
1	High Priority
0	Low Priority

11.13.38 IPR9

Name: IPR9
Address: 0x370

Peripheral Interrupt Priority Register 9

Bit	7	6	5	4	3	2	1	0
	DMA3AIP	DMA3ORIP	DMA3DCNTIP	DMA3SCNTIP	U3IP	U3EIP	U3TXIP	U3RXIP
Access	R/W	R/W	R/W	R/W	R/W	R/W	R/W	R/W
Reset	1	1	1	1	1	1	1	1

Bit 7 – DMA3AIP DMA3 Abort Interrupt Priority

Value	Description
1	High Priority
0	Low Priority

Bit 6 – DMA3ORIP DMA3 Overrun Interrupt Priority

Value	Description
1	High Priority
0	Low Priority

Bit 5 – DMA3DCNTIP DMA3 Destination Count Interrupt Priority

Value	Description
1	High Priority
0	Low Priority

Bit 4 – DMA3SCNTIP DMA3 Source Count Interrupt Priority

Value	Description
1	High Priority
0	Low Priority

Bit 3 – U3IP UART3 Interrupt Priority

Value	Description
1	High Priority
0	Low Priority

Bit 2 – U3EIP UART3 Framing Error Interrupt Priority

Value	Description
1	High Priority
0	Low Priority

Bit 1 – U3TXIP UART3 Transmit Interrupt Priority

Value	Description
1	High Priority
0	Low Priority

Bit 0 – U3RXIP UART3 Receive Interrupt Priority

Value	Description
1	High Priority
0	Low Priority

11.13.39 IPR10

Name: IPR10
Address: 0x371

Peripheral Interrupt Priority Register 10

Bit	7	6	5	4	3	2	1	0
	DMA4AIP	DMA4ORIP	DMA4DCNTIP	DMA4SCNTIP	TMR4IP			INT2IP
Access	R/W	R/W	R/W	R/W	R/W			R/W
Reset	1	1	1	1	1			1

Bit 7 – DMA4AIP DMA4 Abort Interrupt Priority

Value	Description
1	High Priority
0	Low Priority

Bit 6 – DMA4ORIP DMA Overrun Interrupt Priority

Value	Description
1	High Priority
0	Low Priority

Bit 5 – DMA4DCNTIP DMA4 Destination Count Interrupt Priority

Value	Description
1	High Priority
0	Low Priority

Bit 4 – DMA4SCNTIP DMA4 Source Count Interrupt Priority

Value	Description
1	High Priority
0	Low Priority

Bit 3 – TMR4IP TMR4 Interrupt Priority

Value	Description
1	High Priority
0	Low Priority

Bit 0 – INT2IP External Interrupt 2 Interrupt Priority

Value	Description
1	High Priority
0	Low Priority

11.14 Register Summary - Interrupts

Address	Name	Bit Pos.	7	6	5	4	3	2	1	0
0x00 ... 0x0366	Reserved									
0x0367	IPR0	7:0	IOCIP	CRCIP	CLC1IP	NVMIP	CSWIP	OSFIP	HLVDIP	SWIP
0x0368	IPR1	7:0	SMT1PWAIP	SMT1PRAIP	SMT1IP	CM1IP	ACTIP	ADIP	ZCDIP	INT0IP
0x0369	IPR2	7:0	DMA1AIP	DMA1ORIP	DMA1DCNTIP	DMA1SCNTIP				ADTIP
0x036A	IPR3	7:0	TMR0IP	CCP1IP	TMR1GIP	TMR1IP	TMR2IP	SPI1IP	SPI1TXIP	SPI1RXIP
0x036B	IPR4	7:0	PWM1IP	PWM1PIP	TMR3GIP	TMR3IP	U1IP	U1EIP	U1TXIP	U1RXIP
0x036C	IPR5	7:0	PWM2IP	PWM2PIP	CLC2IP	CMIP		SPI2IP	SPI2TXIP	SPI2RXIP
0x036D	IPR6	7:0	DMA2AIP	DMA2ORIP	DMA2DCNTIP	DMA2SCNTIP	NCO1IP	CWG1IP		INT1IP
0x036E	IPR7	7:0	PWM3IP	PWM3PIP	CLC3IP		I2C1EIP	I2C1IP	I2C1TXIP	I2C1RXIP
0x036F	IPR8	7:0	SCANIP		CLC4IP		U2IP	U2EIP	U2TXIP	U2RXIP
0x0370	IPR9	7:0	DMA3AIP	DMA3ORIP	DMA3DCNTIP	DMA3SCNTIP	U3IP	U3EIP	U3TXIP	U3RXIP
0x0371	IPR10	7:0	DMA4AIP	DMA4ORIP	DMA4DCNTIP	DMA4SCNTIP	TMR4IP			INT2IP
0x0372 ... 0x0375	Reserved									
0x0376	SHADCON	7:0								SHADLO
0x0377 ... 0x0458	Reserved									
0x0459	IVTLOCK	7:0								IVTLOCKED
0x045A	IVTAD	7:0	IVTADL[7:0]							
		15:8	IVTADH[7:0]							
		23:16				IVTADU[4:0]				
0x045D	IVTBASE	7:0	IVTBASEL[7:0]							
		15:8	IVTBASEH[7:0]							
		23:16				IVTBASEU[4:0]				
0x0460 ... 0x04A7	Reserved									
0x04A8	PIE0	7:0	IOCIE	CRCIE	CLC1IE	NVMIE	CSWIE	OSFIE	HLVDIE	SWIE
0x04A9	PIE1	7:0	SMT1PWAIE	SMT1PRAIE	SMT1IE	CM1IE	ACTIE	ADIE	ZCDIE	INT0IE
0x04AA	PIE2	7:0	DMA1AIE	DMA1ORIE	DMA1DCNTIE	DMA1SCNTIE				ADTIE
0x04AB	PIE3	7:0	TMR0IE	CCP1IE	TMR1GIE	TMR1IE	TMR2IE	SPI1IE	SPI1TXIE	SPI1RXIE
0x04AC	PIE4	7:0	PWM1IE	PWM1PIE	TMR3GIE	TMR3IE	U1IE	U1EIE	U1TXIE	U1RXIE
0x04AD	PIE5	7:0	PWM2IE	PWM2PIE	CLC2IE	CM2IE		SPI2IE	SPI2TXIE	SPI2RXIE
0x04AE	PIE6	7:0	DMA2AIE	DMA2ORIE	DMA2DCNTIE	DMA2SCNTIE	NCO1IE	CWG1IE		INT1IE
0x04AF	PIE7	7:0	PWM3IE	PWM3PIE	CLC3IE		I2C1EIE	I2C1IE	I2C1TXIE	I2C1RXIE
0x04B0	PIE8	7:0	SCANIE		CLC4IE		U2IE	U2EIE	U2TXIE	U2RXIE
0x04B1	PIE9	7:0	DMA3AIE	DMA3ORIE	DMA3DCNTIE	DMA3SCNTIE	U3IE	U3EIE	U3TXIE	U3RXIE
0x04B2	PIE10	7:0	DMA4AIE	DMA4ORIE	DMA4DCNTIE	DMA4SCNTIE	TMR4IE			INT2IE
0x04B3	PIR0	7:0	IOCIF	CRCIF	CLC1IF	NVMIF	CSWIF	OSFIF	HLVDIF	SWIF
0x04B4	PIR1	7:0	SMT1PWAIF	SMT1PRAIF	SMT1IF	CM1IF	ACTIF	ADIF	ZCDIF	INT0IF
0x04B5	PIR2	7:0	DMA1AIF	DMA1ORIF	DMA1DCNTIF	DMA1SCNTIF				ADTIF
0x04B6	PIR3	7:0	TMR0IF	CCP1IF	TMR1GIF	TMR1IF	TMR2IF	SPI1IF	SPI1TXIF	SPI1RXIF
0x04B7	PIR4	7:0	PWM1IF	PWM1PIF	TMR3GIF	TMR3IF	U1IF	U1EIF	U1TXIF	U1RXIF
0x04B8	PIR5	7:0	PWM2IF	PWM2PIF	CLC2IF	CM2IF		SPI2IF	SPI2TXIF	SPI2RXIF
0x04B9	PIR6	7:0	DMA2AIF	DMA2ORIF	DMA2DCNTIF	DMA2SCNTIF	NCO1IF	CWG1IF		INT1IF
0x04BA	PIR7	7:0	PWM3IF	PWM3PIF	CLC3IF		I2C1EIF	I2C1IF	I2C1TXIF	I2C1RXIF
0x04BB	PIR8	7:0	SCANIF		CLC4IF		U2IF	U2EIF	U2TXIF	U2RXIF
0x04BC	PIR9	7:0	DMA3AIF	DMA3ORIF	DMA3DCNTIF	DMA3SCNTIF	U3IF	U3EIF	U3TXIF	U3RXIF
0x04BD	PIR10	7:0	DMA4AIF	DMA4ORIF	DMA4DCNTIF	DMA4SCNTIF	TMR4IF			INT2IF
0x04BE ... 0x04D5	Reserved									

.....continued

Address	Name	Bit Pos.	7	6	5	4	3	2	1	0
0x04D6	INTCON0	7:0	GIE/GIEH	GIEL	IPEN			INT2EDG	INT1EDG	INT0EDG
0x04D7	INTCON1	7:0	STAT[1:0]							

12. OSC - Oscillator Module (With Fail-Safe Clock Monitor)

The oscillator module contains multiple clock sources and selection features that allow it to be used in a wide range of applications while maximizing performance and minimizing power consumption.

Clock sources can be supplied either internally or externally. External sources include:

- External clock oscillators
- Quartz crystal resonators
- Ceramic resonators
- Secondary Oscillator (SOSC)

Internal sources include:

- High-Frequency Internal Oscillator (HFINTOSC)
- Low-Frequency Internal Oscillator (LFINTOSC)
- Analog-to-Digital Converter RC Oscillator (ADCRC)

Special features of the oscillator module include:

- Oscillator Start-up Timer (OST): Ensures stability of quartz crystal or ceramic resonators.
- 4x Phase-Locked Loop (PLL): Frequency multiplier for external clock sources.
- HFINTOSC Frequency Adjustment: Provides the ability to adjust the HFINTOSC frequency.
- Clock switching: Allows the system clock to switch between internal or external sources via software during run time.
- Fail-Safe Clock Monitor (FSCM): Designed to detect failure of the system clock (FOSC), primary external clock (EXTOSC), or secondary external clock (SOSC) sources. The FSCM automatically switches to an internal clock source upon detection of a system clock (FOSC) failure.

The Reset Oscillator (RSTOSC) Configuration bits determine the type of oscillator that will be used when the device runs after a Reset, including when the device is first powered up (see table below).

Table 12-1. RSTOSC Selection Table

RSTOSC	SFR Reset Values			Clock Source
	NOSC / COSC	NDIV / CDIV	OSCFRQ	
111	111	0000 (1:1)	0010 (4 MHz)	EXTOSC per FEXTOSC
110	110	0010 (4:1)		HFINTOSC @ 1 MHz
101	101	0000 (1:1)		LFINTOSC
100	100	0000 (1:1)		SOSC
011	Reserved			
010	010	0000 (1:1)	0010 (4 MHz)	EXTOSC + 4x PLL(1)
001	Reserved			
000	000	0000 (1:1)	1000 (64 MHz)	HFINTOSC @ 64 MHz

Note:

1. EXTOSC must meet the PLL specifications (see data sheet Electrical Specifications).

If an external clock source is selected by the RSTOSC bits, the External Oscillator Mode Select (FEXTOSC) Configuration bits must be used to select the external clock mode. These modes include:

- ECL: External Clock Low-Power mode
- ECM: External Clock Medium-Power mode
- ECH: External Clock High-Power mode
- LP: 32 kHz Low-Gain Crystal mode

- XT: Medium-Gain Crystal or Ceramic Resonator mode
- HS: High-Gain Crystal or Ceramic Resonator mode

The ECH, ECM, and ECL modes rely on an external logic-level signal as the device clock source. The LP, XT, and HS modes rely on an external quartz crystal or ceramic resonator as the device clock source. Each mode is optimized for a specific frequency range. The internal oscillator block produces both low-frequency and high-frequency clock signals, designated LFINTOSC and HFINTOSC, respectively. Multiple system operating frequencies may be derived from these clock sources.

The figure below illustrates a block diagram of the oscillator module.

Figure 12-1. Clock Source Block Diagram

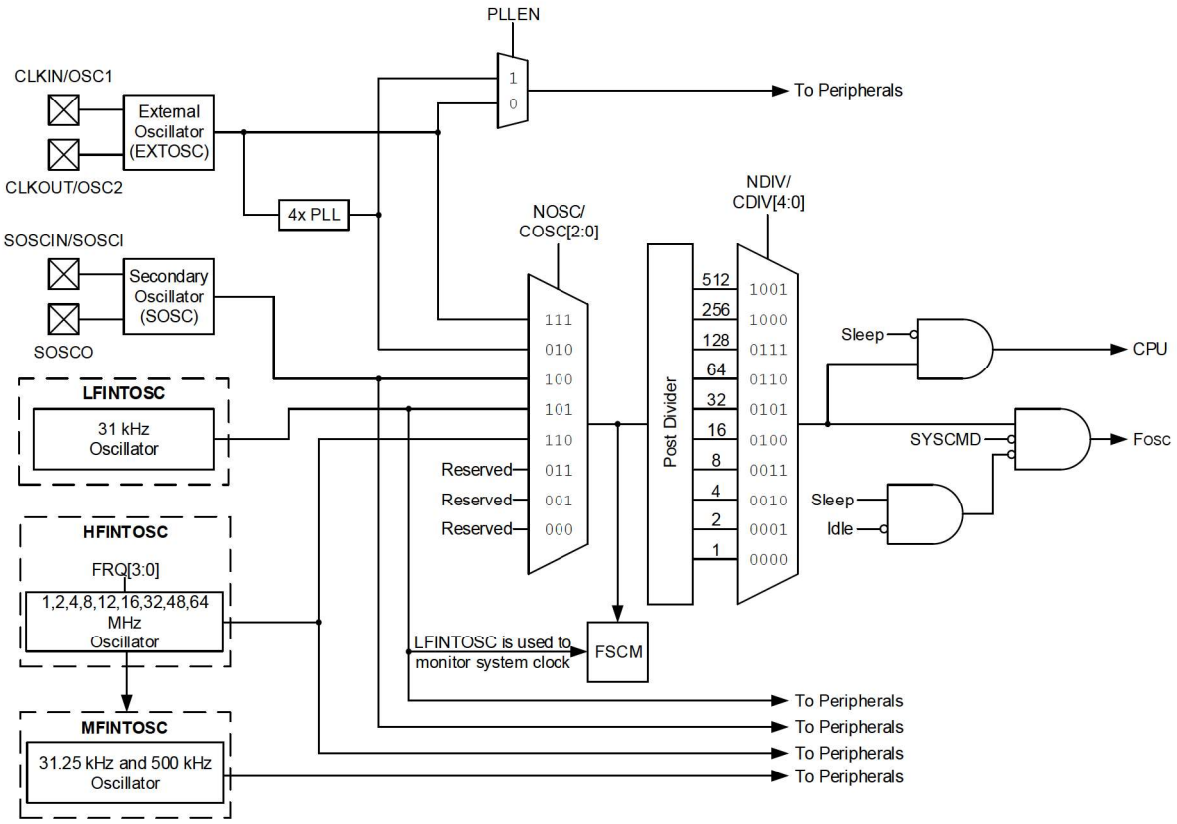

12.1 Clock Source Types

Clock sources can be classified as external or internal.

External clock sources rely on external circuitry for the clock source to function. Examples of external clock sources include:

- Digital oscillator modules
- Quartz crystal resonators
- Ceramic resonators

A 4x PLL is provided for use with external clock sources.

Internal clock sources are contained within the oscillator module. The internal oscillator block features two internal oscillators that are used to generate internal system clock sources. The High-Frequency Internal Oscillator (HFINTOSC) can produce a wide range of frequencies which are determined via the HFINTOSC Frequency Selection (OSCFRQ) register. The Low-Frequency Internal Oscillator (LFINTOSC) generates a fixed nominal 31 kHz clock

signal. The internal oscillator block also features an RC oscillator which is dedicated to the Analog-to-Digital Converter (ADC).

The oscillator module allows the system clock source or system clock frequency to be changed through clock switching. Clock source selections are made via the New Oscillator Source Request (NOSC) bits. Once the clock source has been selected, the clock source base frequency can be divided (post-scaled) via the New Divider Selection Request (NDIV) bits.

The instruction clock ($F_{OSC}/4$) can be routed to the OSC2/CLKOUT pin when the pin is not in use. The Clock Out Enable ($\overline{CLKOUTEN}$) Configuration bit controls the functionality of the CLKOUT signal. When $\overline{CLKOUTEN}$ is clear ($\overline{CLKOUTEN}$ = 0), the CLKOUT signal is routed to the OSC2/CLKOUT pin. When $\overline{CLKOUTEN}$ is set ($\overline{CLKOUTEN}$ = 1), the OSC2/CLKOUT pin functions as an I/O pin.

12.1.1 External Clock Sources

An external clock source can be used as the device system clock by performing one of the following actions:

- Program the RSTOSC and FEXTOSC Configuration bits to select an external clock source that will be used as the default system clock upon a device Reset.
- Write the NOSC and NDIV bits to switch the system clock source during run time.

12.1.1.1 EC Mode

The External Clock (EC) mode allows an externally generated logic level signal to be the system clock source. When operating in EC mode, an external clock source is connected to the OSC1/CLKIN input pin. The OSC2/CLKOUT pin is available as a general purpose I/O pin or as the CLKOUT signal pin.

EC mode provides three power mode selections:

- ECH: High-power mode
- ECM: Medium-power mode
- ECL: Low-power mode

The Oscillator Start-up Timer (OST) is disabled when EC mode is selected; therefore, there is no delay in operation after a Power-on Reset (POR) or wake-up from Sleep. Because the PIC® MCU design is fully static, stopping the external clock input will have the effect of halting the device while leaving all data intact. Upon restarting the external clock, the device will resume operation as if no time had elapsed.

The figure below shows the pin connections for EC mode.

Figure 12-2. External Clock (EC) Mode Operation

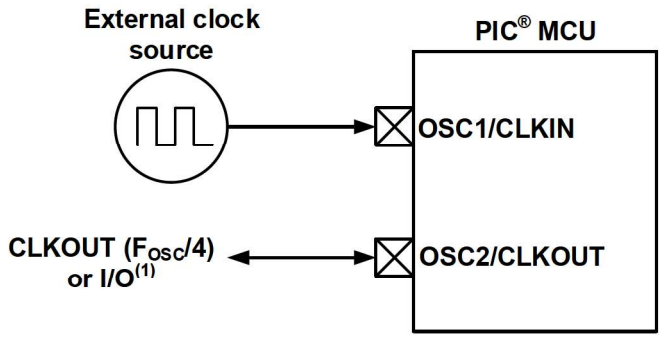

Note:

1. Output depends on the setting of the $\overline{CLKOUTEN}$ Configuration bit.

12.1.1.2 LP, XT, HS Modes

The LP, XT, and HS modes support the use of quartz crystals or ceramic resonators connected to the OSC1 and OSC2 pins as shown in the figures below. These three modes select a low, medium, or high gain setting of the internal inverter-amplifier to support various resonator types and speeds.

The **LP** Oscillator mode selects the lowest gain setting of the internal inverter-amplifier, and consumes the least amount of current. LP mode is designed to drive 32.768 kHz tuning-fork type crystals (watch crystals), but can operate up to 100 kHz.

The **XT** Oscillator mode selects the intermediate gain setting of the internal inverter-amplifier. Current consumption is at a medium level when compared to the other two modes. XT mode is best suited to drive crystal and ceramic resonators with a frequency range up to 4 MHz.

The **HS** Oscillator mode selects the highest gain setting of the internal inverter-amplifier, and consumes the most current. This mode is best suited for crystal and ceramic resonators that require operating frequencies up to 20 MHz.

The figures below show typical circuits for quartz crystal and ceramic resonators.

Figure 12-3. Quartz Crystal Operation

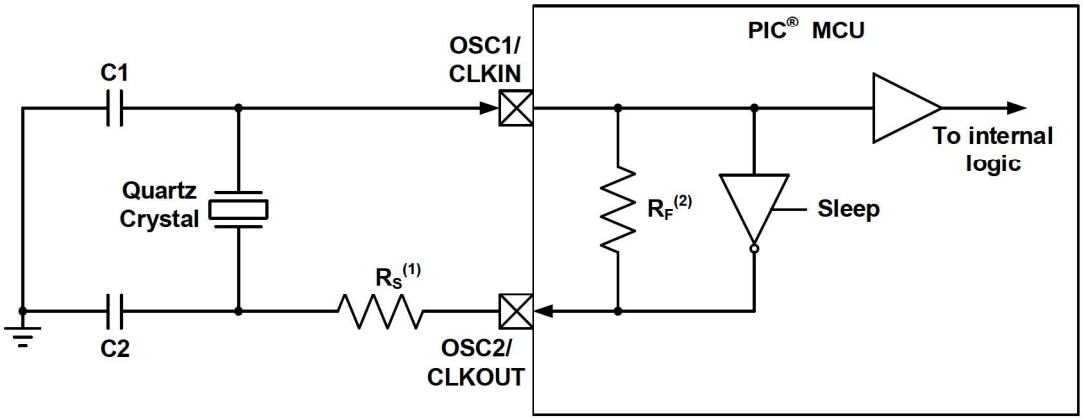

Notes:

1. A series resistor (R_S) may be required for quartz crystals with low drive level.
2. The value of R_F varies with the oscillator mode selected (typically between 2 MΩ and 10 MΩ).

Figure 12-4. Ceramic Resonator Operation

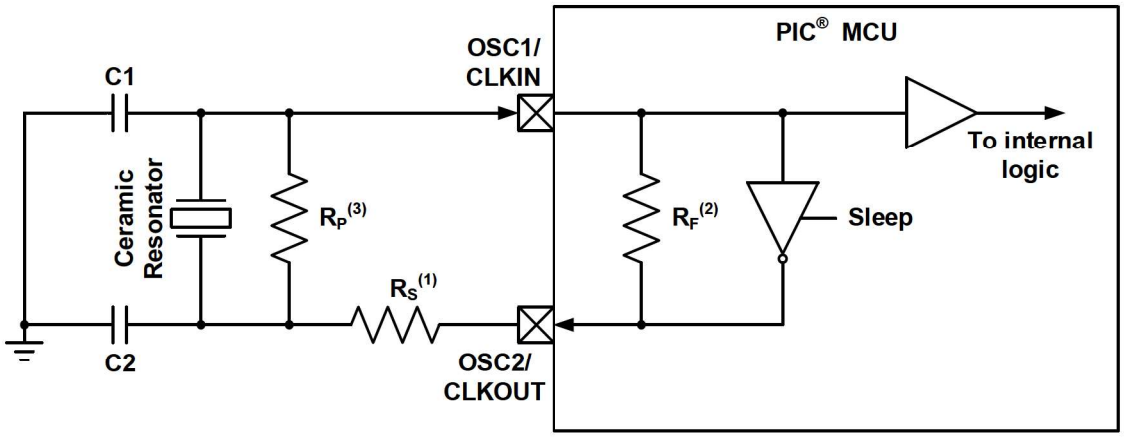

Notes:

1. A series resistor (R_S) may be required for ceramic resonators with low drive level.
2. The value of R_F varies with the oscillator mode selected (typically between 2 MΩ and 10 MΩ).
3. An additional parallel feedback resistor (R_P) may be required for proper ceramic resonator operation.

12.1.1.3 Oscillator Start-Up Timer (OST)

The Oscillator Start-up Timer (OST) ensures that the oscillator circuit has started and is providing a stable system clock to the oscillator module. Quartz crystals or ceramic resonators do not start immediately, and may take a few hundred cycles before the oscillator becomes stable. The oscillations must build up until sufficient amplitude is generated to properly toggle between logic states. The OST counts 1024 oscillation periods from the OSC1 input following a Power-on Reset (POR), Brown-out Reset (BOR), or wake-up from Sleep event to ensure that the oscillator has enough time to reach stable and accurate operation. Once the OST has completed its count, module hardware sets the External Oscillator Ready (EXTOR) bit, indicating that the oscillator is stable and ready to use.

12.1.1.4 4x PLL

The oscillator module contains a 4x Phase-Locked Loop (PLL) circuit that can be used with the external clock sources to provide a system clock source. The input frequency for the PLL must fall within a specified range. See the PLL Clock Timing Specifications found in the **"Electrical Specifications"** chapter for more information.

The PLL can be enabled for use through one of two methods:

1. Program the RSTOSC Configuration bits to select the 'EXTOSC with 4x PLL' option.
2. Write the NOSC bits to select the 'EXTOSC with 4x PLL' option.

12.1.1.5 Secondary Oscillator

The Secondary Oscillator (SOSC) is a separate external oscillator block that can be used as an alternate system clock source or as a Timer clock source. The SOSC is optimized for 32.768 kHz, and can be used with either an external quartz crystal connected to the SOSCI and SOSCO pins, or with an external clock source connected to the SOSCI pin as shown in the figures below.

Figure 12-5. SOSC 32.768 kHz Quartz Crystal Oscillator Operation

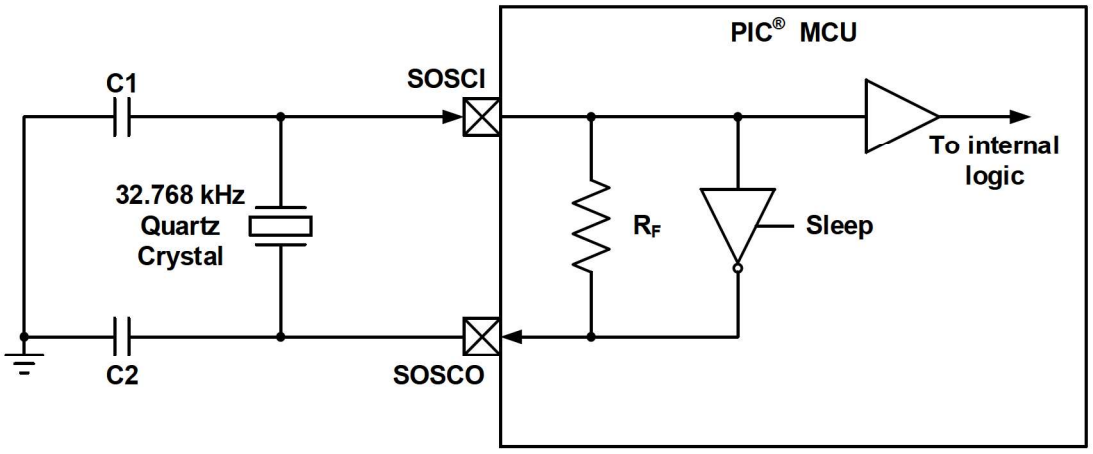

Figure 12-6. SOSC 32.768 kHz External Clock Operation

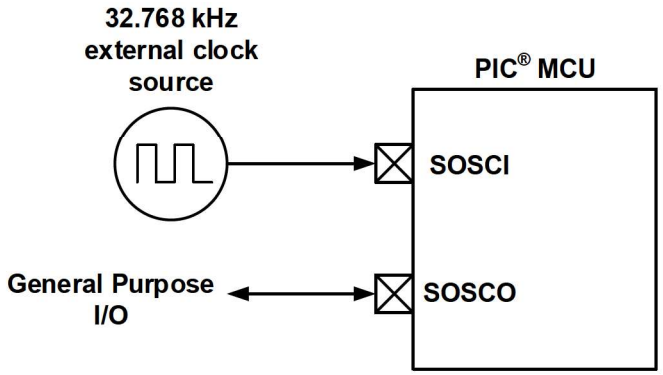

The SOSC can be enabled through one of two methods:

- Programming the RSTOSC Configuration bits to select the SOSC as the system clock.
- Programming the NOSC bits to select the SOSC during run time.

Two power modes are available for the secondary oscillator, and are selected using the Secondary Oscillator Power Mode Select (SOSCPWR) bit. When SOSCPWR is clear (SOSCPWR = 0), the oscillator operates in Low-Power mode, which is ideal for crystal oscillators with low drive strength. When SOSCPWR is set (SOSCPWR = 1), the oscillator operates in High-Power mode, which is ideal for crystal oscillators with high drive strength or high Equivalent Series Resistance (ESR).

Important: The SOSC module must be disabled before changing power modes. Changes to the Power mode during operation may result in undefined oscillator behavior.

12.1.1.5.1 SOSC Start-Up Timing

The SOSC utilizes the Oscillator Start-up Timer (OST) to ensure that the 32.768 kHz crystal oscillator has started and is available for use. Since crystal oscillators do not start immediately and may take a few hundred cycles before achieving stable operation, the OST counts 1024 oscillation periods from the SOSCI input. Once the OST completes its count, module hardware sets the Secondary Oscillator Ready (SOR) bit, indicating that the SOSC is stable and ready to use.

12.1.2 Internal Clock Sources

The internal oscillator block contains two independent oscillators that can produce two internal system clock sources:

- High-Frequency Internal Oscillator (HFINTOSC)
- Low-Frequency Internal Oscillator (LFINTOSC)

Internal oscillator selection is performed one of two ways:

1. Program the RSTOSC Configuration bits to select one of the INTOSC sources which will be used upon a device Reset.
2. Write the New Oscillator Source Request (NOSC) bits to select an internal oscillator during run time.

In INTOSC mode, the OSC1/CLKIN and OSC2/CLKOUT pins are available for use as a general purpose I/Os, provided that no external oscillator is connected. The function of the OSC2/CLKOUT pin is determined by the $\overline{\text{CLKOUTEN}}$ Configuration bit. When $\overline{\text{CLKOUTEN}}$ is set ($\overline{\text{CLKOUTEN}}$ = 1), the pin functions as a general-purpose I/O. When $\overline{\text{CLKOUTEN}}$ is clear ($\overline{\text{CLKOUTEN}}$ = 0), the system instruction clock ($F_{OSC}/4$) is available as an output signal on the pin.

12.1.2.1 HFINTOSC

The High-Frequency Internal Oscillator (HFINTOSC) is a factory-calibrated, precision digitally-controlled internal clock source that produces a wide range of stable clock frequencies. The HFINTOSC can be enabled through one of the following methods:

- Program the RSTOSC Configuration bits to select the HFINTOSC upon device Reset or power-up
- Write to the New Oscillator Source Request (NOSC) bits to select the HFINTOSC during run time.

The HFINTOSC frequency is selected via the HFINTOSC Frequency Selection (FRQ) bits. Fine-tuning of the HFINTOSC is done via the HFINTOSC Frequency Tuning (TUN) bits. The HFINTOSC output frequency can be divided (post-scaled) via the New Divider Selection Request (NDIV) bits.

12.1.2.1.1 HFINTOSC Frequency Tuning

The HFINTOSC frequency can be fine-tuned via the HFINTOSC Tuning Register (OSCTUNE). The OSCTUNE register is used by Active Clock Tuning hardware or user software to provide small adjustments to the HFINTOSC nominal frequency.

The OSCTUNE register contains the HFINTOSC Frequency Tuning (TUN) bits. The TUN bits default to a 6-bit, two's compliment value of 0x00, which indicates that the oscillator is operating at the selected frequency. When a value between 0x01 and 0x1F is written to the TUN bits, the HFINTOSC frequency is increased. When a value between 0x3F and 0x20 is written to the TUN bits, the HFINTOSC frequency is decreased.

When the OSCTUNE register is modified, the oscillator will begin to shift to the new frequency. Code execution continues during this shift. There is no indication that the frequency shift occurred.

Important: OSCTUNE tuning does not affect the LFINTOSC frequency.

12.1.2.2 MFINTOSC

The Medium-Frequency Internal Oscillator (MFINTOSC) generates two constant clock outputs (500 kHz and 31.25 kHz). The MFINTOSC clock signals are created from the HFINTOSC using dynamic divider logic, which provides constant MFINTOSC clock rates regardless of selected HFINTOSC frequency.

The MFINTOSC cannot be used as the system clock, but can be used as a clock source for certain peripherals, such as a Timer.

12.1.2.3 LFINTOSC

The Low-Frequency Internal Oscillator (LFINTOSC) is a factory-calibrated 31 kHz internal clock source.

The LFINTOSC can be used as a system clock source, and may be used by certain peripheral modules as a clock source. Additionally, the LFINTOSC provides a time base for the following:

- Power-up Timer (PWRT)
- Watchdog Timer (WDT)/Windowed Watchdog Timer (WWDT)
- Fail-Safe Clock Monitor (FSCM)

The LFINTOSC is enabled through one of the following methods:

- Program the RSTOSC Configuration bits to select LFINTOSC
- Write the NOSC bits to select LFINTOSC during run time

12.1.2.4 ADCRC

The Analog-to-Digital RC (ADCRC) oscillator is dedicated to the ADC module. This oscillator is also referred to as the FRC clock. The ADCRC operates at a fixed frequency of approximately 600 kHz, and is used as a conversion clock source. The ADCRC allows the ADC module to operate in Sleep mode, which can reduce system noise during the ADC conversion. The ADCRC is automatically enabled when it is selected as the clock source for the ADC module, or when selected as the clock source of any peripheral that may use it. The ADCRC may also be manually enabled via the ADC Oscillator Enable (ADOEN) bit, thereby avoiding start-up delays when this source is used intermittently.

12.1.3 Oscillator Status and Manual Enable

The Oscillator Status (OSCSTAT) register displays the Ready status for each of the following oscillators:

- External oscillator
- HFINTOSC
- MFINTOSC
- LFINTOSC
- SOSC
- ADCRC

The OSCSTAT register also displays the Ready status for the 4xPLL.

The HFINTOSC Oscillator Ready (HFOR) and MFINTOSC Oscillator Ready (MFOR) Status bits indicate whether the respective oscillators are ready for use. Both clock sources are available for use at any time, but may require a finite amount of time before they have reached the specified accuracy levels. When the HFINTOSC or MFINTOSC are ready and achieved the specified accuracy, module hardware sets the HFOR/MFOR bits, respectively.

When a new value is loaded into the OSCFRQ register, the HFOR and MFOR bits are cleared by hardware, and will be set again once the respective oscillator is ready. During pending OSCFRQ changes, the MFINTOSC will stall at either a high or a low state until the HFINTOSC locks in the new frequency and resumes operation.

The Oscillator Enable (OSCEN) register can be used to manually enable the following oscillators:

- External oscillator
- HFINTOSC
- MFINTOSC
- LFINTOSC
- SOSC
- ADCRC

Important: OSCEN cannot be used to manually enable the 4xPLL.

12.2 Clock Switching

The system clock source can be switched between external and internal clock sources via software using the New Oscillator Source Request (NOSC) and New Divider Selection Request (NDIV) bits. The following sources can be selected:

- External Oscillator (EXTOSC)
- EXTOSC with 4x PLL
- High-Frequency Internal Oscillator (HFINTOSC)
- Low-Frequency Internal Oscillator (LFINTOSC)
- Secondary Oscillator (SOSC)

The Clock Switch Enable (CSWEN) Configuration bit can be used to enable or disable the clock switching capability. When CSWEN is set (CSWEN = 1), writes to NOSC and NDIV by user software will allow the system clock to switch between sources or frequencies. When CSWEN is clear (CSWEN = 0), writes to NOSC and NDIV are ignored, preventing the system clock from switching from one source to another.

12.2.1 NOSC and NDIV Bits

The New Oscillator Source Request (NOSC) and the New Divider Selection Request (NDIV) bits are used to select the system clock source and clock frequency divider that will be used by the CPU and peripherals (see tables below).

When new values are written into NOSC and/or NDIV, the current oscillator selection will continue to operate as the system clock while waiting for the new source to indicate that it is ready. Writes to NDIV without changing the clock source (e.g., changing the HFINTOSC frequency from 1 MHz to 2 MHz) are handled in the same manner as a clock switch.

When the new oscillator selection is ready, the New Oscillator is Ready (NOSCR) bit and the Clock Switch Interrupt Flag (CSWIF) are set by module hardware. If the Clock Switch Interrupt Enable (CSWIE) bit is set (CSWIE = 1), an interrupt will be generated when CSWIF is set. Additionally, the Oscillator Ready (ORDY) bit can be polled to determine that the clock switch has completed and the new oscillator source has replaced the old source as the system clock.

Important: The CSWIF interrupt does not wake the device from Sleep.

Table 12-2. NOSC/COSC Clock Source Selection Table

NOSC / COSC	Clock Source
111	EXTOSC(1)
110	HFINTOSC(2)
101	LFINTOSC
100	SOSC
011	Reserved
010	EXTOSC + 4xPLL(3)
001	Reserved
000	Reserved

Notes:

1. EXTOSC is configured via the FEXTOSC Configuration bits.
2. HFINTOSC frequency is determined by the FRQ bits.
3. EXTOSC must meet the PLL specifications (see data sheet Electrical Specifications).

Table 12-3. NDIV/CDIV Clock Divider Selection Table

NDIV / CDIV	Clock Divider
1111-1010	Reserved
1001	512
1000	256
0111	128
0110	64
0101	32
0100	16
0011	8
0010	4
0001	2
0000	1

12.2.2 COSC and CDIV Bits

The Current Oscillator Source Select (COSC) bits and the Current Divider Select (CDIV) bits indicate the current oscillator source and clock divider, respectively. When a new oscillator or divider is requested via the NOSC/NDIV bits, the COSC and CDIV bits remain unchanged until the clock switch actually occurs. When the switch actually occurs, hardware copies the NOSC and NDIV values into COSC and CDIV, the Oscillator Ready (ORDY) bit is set, and the NOSCR bit is cleared by hardware, indicating that the clock switch is complete.

12.2.3 CSWHOLD

When the system oscillator changes frequencies, peripherals using the system clock may be affected. For example, if the I^2C module is actively using the system clock as its Serial Clock (SCL) time base, changing the system clock frequency will change the SCL frequency. The Clock Switch Hold (CSWHOLD) bit can be used to suspend a requested clock switch. In this example, software can request a new clock source, use the CSWHOLD bit to suspend the switch, wait for the I^2C bus to become Idle, then reconfigure the SCL frequency based on the new clock source. Once the I^2C has been reconfigured, software can use CSWHOLD to complete the clock switch without causing any issues with the I^2C bus.

When CSWHOLD is set (CSWHOLD = 1), a write to NOSC and/or NDIV is accepted, but the clock switch is suspended and does not automatically complete. While the switch is suspended, code execution continues using the old (current) clock source. Module hardware will still enable the new oscillator selection and set the NOSCR bit. Once the NOSCR bit is set, software should either:

- clear CSWHOLD so that the clock switch can complete, or
- copy the Current Oscillator Source Select (COSC) value into NOSC to abandon the clock switch.

When CSWHOLD is clear (CSWHOLD = 0), the clock switch will occur when the NOSCR bit is set. When NOSCR is set, the CSWIF is also set, and if CSWIE is set, the generated interrupt will be serviced using the new oscillator.

12.2.4 PLL Input Switch

Switching between the PLL and any non-PLL source is handled in the same manner as any other clock source change.

When the NOSC selects a source with a PLL, the system continues to operate using the current oscillator until the new oscillator is ready. When the new source is ready, the associated Status bit in the Oscillator Status (OSCSTAT) register is set, and once the PLL is locked and ready for use, the PLL is Ready (PLLR) bit is set. Once both the source and PLL are ready, the switch will complete.

12.2.5 Clock Switch and Sleep

If the NOSC/NDIV bits are written with new values and the device is put to Sleep before the clock switch completes, the switch will not take place and the device will enter Sleep mode.

When the device wakes up from Sleep and CSWHOLD is clear (CSWHOLD = 0), the clock switch will complete and the device will wake with the new clock active, setting CSWIF.

When the device wakes from Sleep and CSWHOLD is set (CSWHOLD = 1), the device will wake up with the old clock active, and the new clock source will be requested again.

If Doze mode is in effect, the clock switch occurs on the next clock cycle regardless of whether or not the CPU is active during that clock cycle.

Figure 12-7. Clock Switch (CSWHOLD = 0)

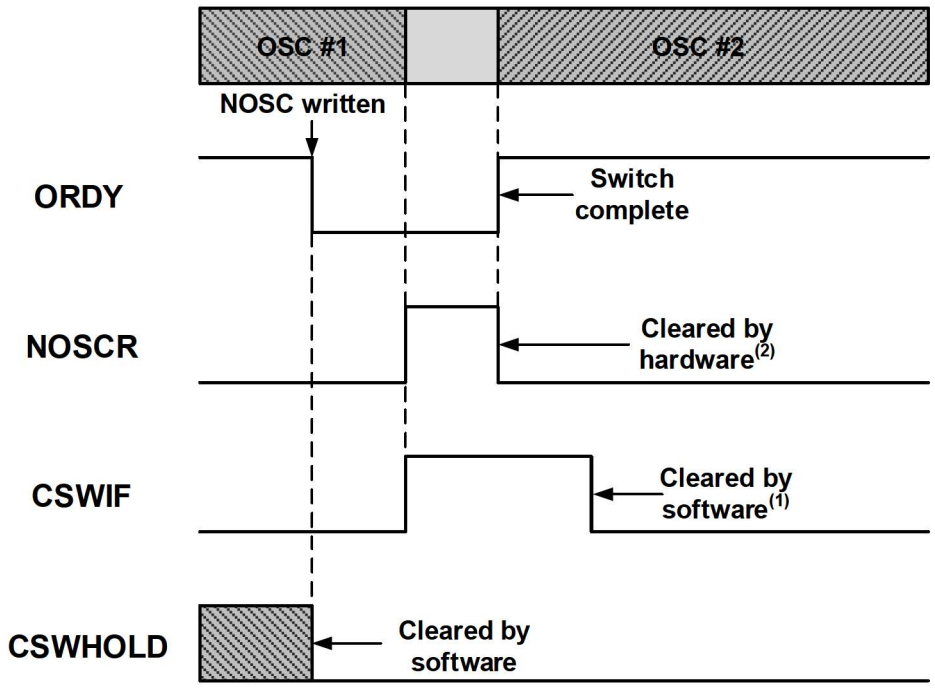

Notes:

1. CSWIF is asserted coincident with NOSCR; interrupt is serviced at OSC#2 speed.
2. The assertion of NOSCR may not be seen by the user as it is only set for the duration of the switch.

Figure 12-8. Clock Switch (CSWHOLD = 1)

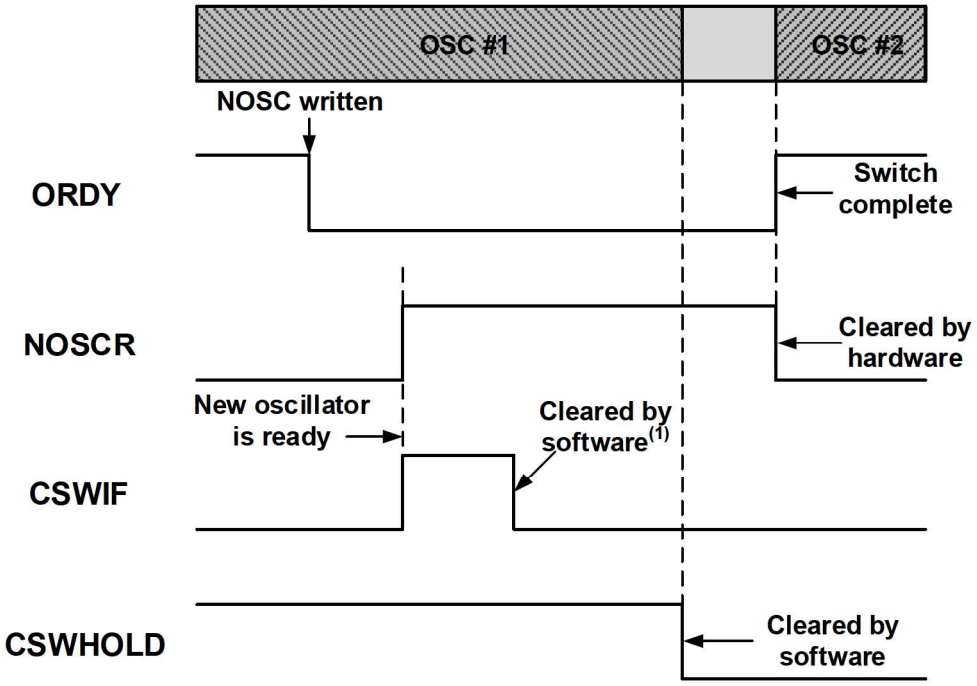

Note:

1. CSWIF may be cleared before or after clearing CSWHOLD.

Figure 12-9. Clock Switch Abandoned

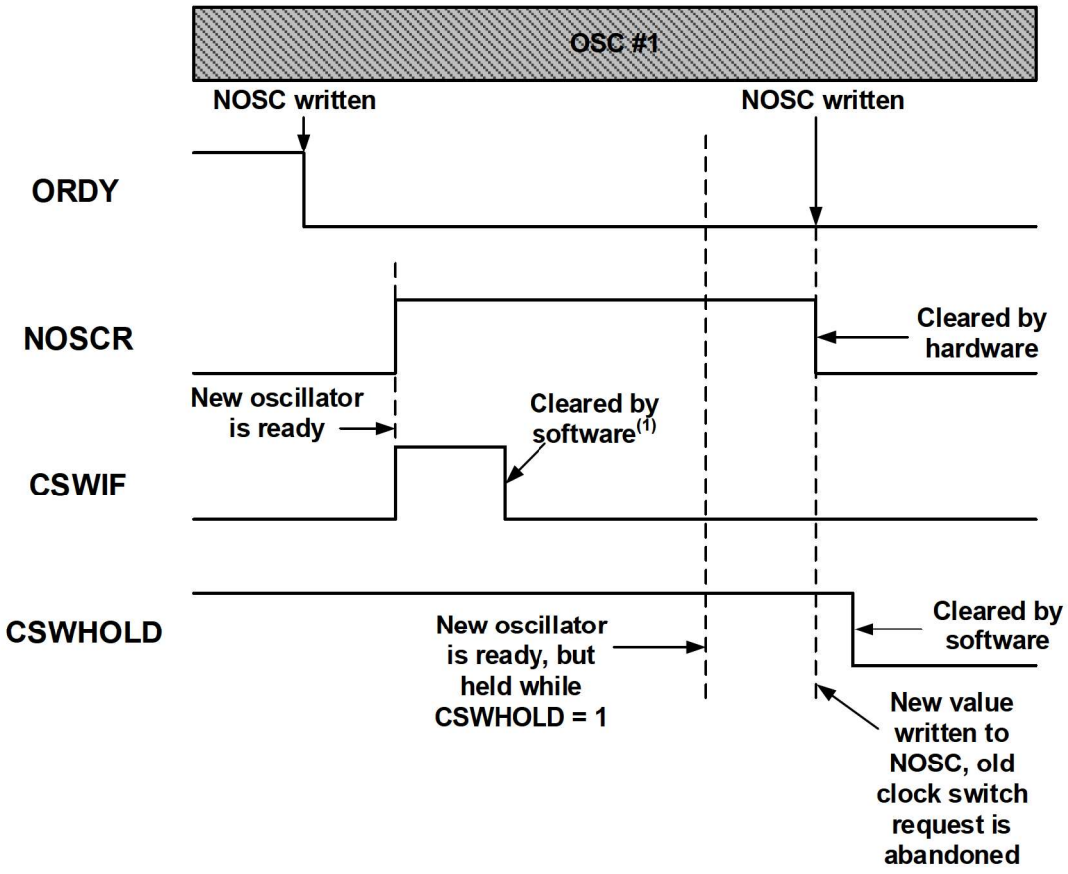

Note:

1. CSWIF may be cleared before or after rewriting NOSC; CSWIF is not automatically cleared.

12.3 Fail-Safe Clock Monitor (FSCM)

The Fail-Safe Clock Monitor (FSCM) allows the device to continue operating in the event of an oscillator failure. The FSCM also provides diagnostic data pertaining to potential primary and secondary oscillator failures. The FSCM serves three separate functions:

- Monitoring of FOSC using the FSCMFEV bit.
- Monitoring of EXTOSC (primary external oscillator) using the FSCMPEV bit.
- Monitoring of SOSC (secondary external oscillator) using the FSCMSEV bit.

The primary external oscillator FSCM (FSCMP) is enabled by setting the Fail-Safe Clock Monitor for Primary Crystal Oscillator (FCMENP) Configuration bit. The secondary external oscillator FSCM (FSCMS) is enabled by setting the Fail-Safe Clock Monitor for Secondary Crystal Oscillator (FCMENS) configuration bit. The FOSC FSCM is enabled by setting the Fail-Safe Clock Monitor Enable for FOSC (FCMEN) configuration bit. The figure below shows the FSCM block diagram.

Figure 12-10. FSCM Block Diagram

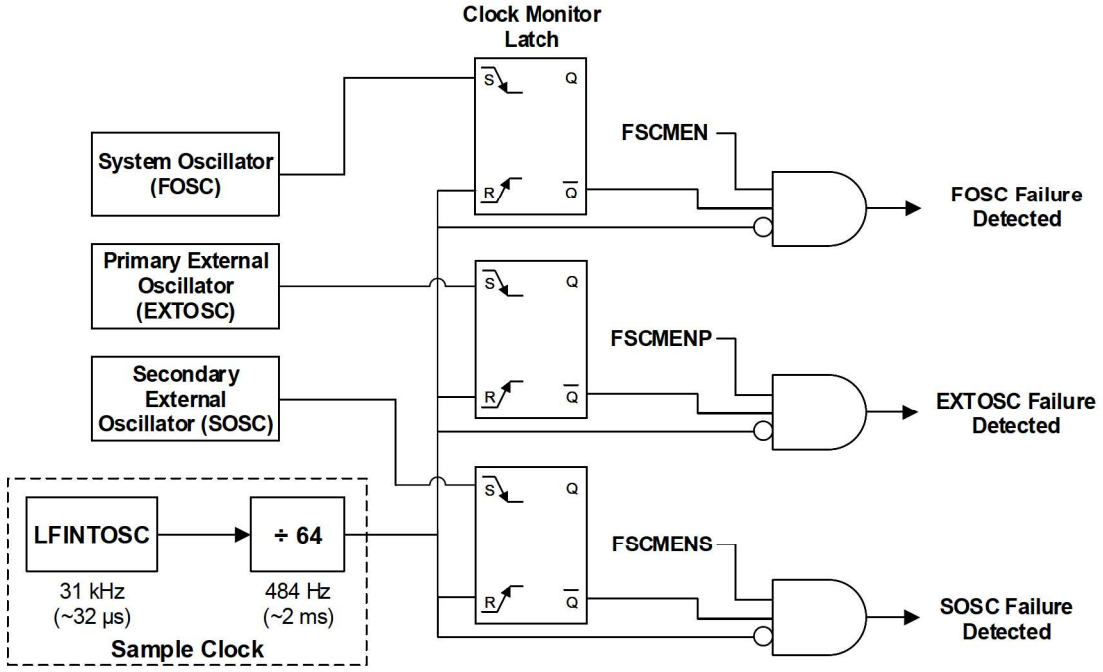

12.3.1 Fail-Safe Detection

Each FSCM detects a failed oscillator by comparing the external oscillator to the FSCM sample clock. The sample clock is generated by dividing the LFINTOSC by 64. The fail detector logic block contains a latch that is set upon each falling edge of the external clock. The latch is cleared on the rising edge of the sample clock. A failure is detected when a half-period of the sample clock elapses before the external clock goes low and the corresponding FSCM failure status bit will be set.

12.3.2 Fail-Safe Operation - FOSC Fail-Safe Clock Monitor

When the system clock (FOSC) fails, the Oscillator Fail Interrupt Flag (OSFIF) bit of the PIR registers will be set, as well as the corresponding FSCM failure status bit (FSCMFEV). If the Oscillator Fail Interrupt Enable (OSFIE) bit was set, an interrupt will be generated when OSFIF is high. If enabled, the FOSC Fail-Safe Clock Monitor will switch the system clock to HFINTOSC when a failure is detected by overwriting the NOSC/COSC bits. The frequency of HFINTOSC will depend on the previous state of the FRQ bits and the state of the NDIV/CDIV bits. Once a failure is detected, software can be used to take steps to mitigate the repercussions of the oscillator failure. The FSCM will switch the system clock to HFINTOSC, and the device will continue to operate from HFINTOSC until the external oscillator has been restarted. Once the external source is operational, it is up to the user to confirm that the clock source is stable and to switch the system clock back to the external oscillator using the NOSC/NDIV bits.

12.3.3 Fail-Safe Operation - Primary and Secondary Fail-Safe Clock Monitors

When the primary external clock (EXTOSC) or the secondary external clock (SOSC) fail, the Oscillator Fail Interrupt Flag (OSFIF) bit of the PIR registers will set. Additionally, the corresponding FSCM failure status bit (FSCMPEV or FSCMSEV respectively) will set. If the Oscillator Fail Interrupt Enable (OSFIE) bit has been set, an interrupt will be generated when OSFIF is high. It is important to note that neither the primary or secondary Fail-Safe Clock Monitors will cause a clock switch to occur in the event of a failure, and it is up to the user to address the clock fail event.

12.3.4 Fail-Safe Clock Monitor Fault Injection

Each of the Fail-Safe Clock monitors on this device has its own respective Fault Injection bit. The fault injection bit is used to verify in software that the FSCM functions work properly and will detect a clock failure during normal operation. If the FSCM fault injection bit is set, the FSCM sample clock input will be blocked, forcing a clock failure. Writing to the FOSC FSCM fault injection bit (FSCMFFI) will result in the system clock switching to HFINTOSC and

the FSCMFEV bit will be set as well as the Oscillator Fail Interrupt Flag (OSFIF) of the PIR registers. Writing to the primary and secondary external FSCM fault injection bits (FSCMPFI and FSCMSFI) will result in the respective FSCM fault status bits being set (FSCMPEV and FSCMSEV) but the system clock will not switch. Additionally, the Oscillator Fail Interrupt Flag (OSFIF) of the PIR registers will also be set.

12.3.5 Fail-Safe Condition Clearing

For the FOSC FSCM, the Fail-Safe condition is cleared after either a device Reset, execution of a SLEEP instruction, or a change to the NOSC/NDIV bits. When switching to the external oscillator or PLL, the Oscillator Start-up Timer (OST) is restarted. While the OST is running, the device continues to operate from HFINTOSC. When the OST expires, the Fail-Safe condition is cleared after successfully switching to the external clock source.

Important: Software must clear the OSFIF bit before switching to the external oscillator. If the Fail-Safe condition still exists, the OSFIF bit will be set again by module hardware.

12.3.6 Reset or Wake-Up From Sleep

The FSCM is designed to detect an oscillator failure after the OST has expired. The OST is used after waking up from Sleep or after any type of Reset, when in either LP, XT, or HS modes. If the device is using EC mode, the FSCM will be active as soon as the Reset or wake-up event has completed.

12.4 Active Clock Tuning (ACT)

Many applications, such as those using UART communication, require an oscillator with an accuracy of ± 1% over the full temperature and voltage range. To meet this level of accuracy, the Active Clock Tuning (ACT) feature utilizes the SOSC frequency of 32.768 kHz to adjust the frequency of the HFINTOSC over voltage and temperature.

Important: Active Clock Tuning requires the use of a 32.768 kHz external oscillator connected to the SOSCI/SOSCO pins.

Active Clock Tuning is enabled via the Active Clock Tuning Enable (ACTEN) bit. When ACTEN is set (ACTEN = 1), the ACT module uses the SOSC time base to measure the HFINTOSC frequency, and uses the HFINTOSC Frequency Tuning (TUN) bits to adjust the HFINTOSC frequency. When ACTEN is clear (ACTEN = 0), the ACT feature is disabled, and user software can utilize the TUN bits to adjust the HFINTOSC frequency.

Important: When the ACT feature is enabled, the TUN bits are controlled directly through module hardware and become read-only bits to user software. Writes to the TUN bits when the ACT feature is enabled are ignored.

The figure below shows the Active Clock Tuning block diagram.

Figure 12-11. Active Clock Tuning (ACT) Block Diagram

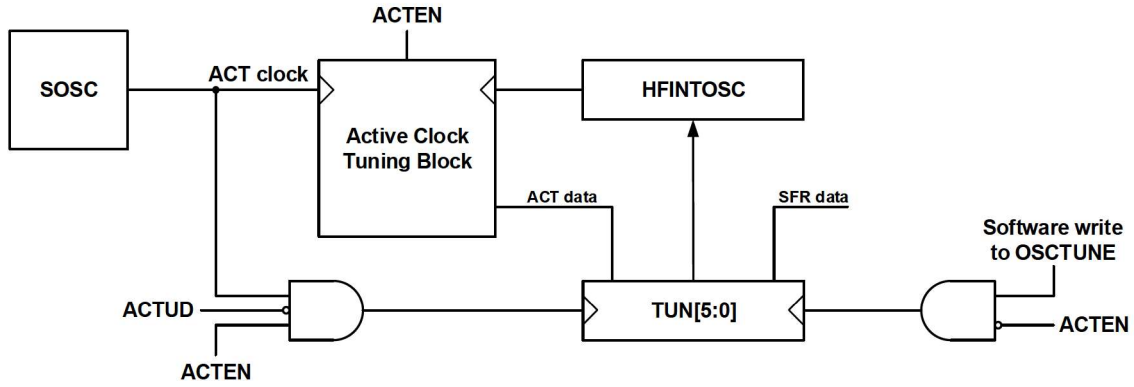

12.4.1 ACT Lock Status

The Active Clock Tuning Lock Status (ACTLOCK) bit can be used to determine when the HFINTOSC has been tuned. When ACTLOCK is set (ACTLOCK = 1), the HFINTOSC frequency has been locked to within ± 1% of the nominal frequency. When ACTLOCK is clear (ACTLOCK = 0), the following conditions may be true:

- The HFINTOSC frequency has not been locked to within ± 1%
- A device Reset occurred
- The ACT feature is disabled

Important: The ACTLOCK bit is read-only. Writes to ACTLOCK are ignored.

12.4.2 ACT Out-Of-Range Status

When Active Clock Tuning is enabled, module hardware uses the TUN bits to achieve high accuracy levels. If the module requires a TUN value outside of its range, the ACT Out-of-Range Status (ACTORS) bit is set by hardware (ACTORS = 1).

The ACTORS bit will be set when:

- The HFINTOSC is tuned to its lowest frequency as determined by the TUN bits, and would require a value lower than the TUN bits can provide to achieve accuracy within ± 1%.
- The HFINTOSC is tuned to its highest frequency as determined by the TUN bits, and would require a value higher than the TUN bits can provide to achieve accuracy within ± 1%.

When an ACT out-of-range event occurs, the HFINTOSC will continue to use the last TUN value until the HFINTOSC frequency returns to the tunable range. Once the HFINTOSC returns to the tunable range, module hardware clears the ACTORS bit.

Important: The ACTORS bit is read-only. Writes to ACTORS are ignored.

12.4.3 ACT Update Disable

When Active Clock Tuning is enabled, the OSCTUNE register is continuously updated every ACT clock cycle. The ACT Update Disable (ACTUD) bit can be used to suspend updates to the OSCTUNE register. When ACTUD is set

(ACTUD = 1), updates to OSCTUNE are suspended, although the module continues to operate. The last value written to OSCTUNE is used for tuning, and the ACTLOCK bit is continually updated for each ACT cycle. When ACTUD is clear (ACTUD = 0), the module updates OSCTUNE register every ACT cycle.

12.4.4 ACT Interrupts

When Active Clock Tuning is enabled (ACTEN = 1) and either the ACTLOCK or ACTORS bits change state (e.g., from a Locked to an Unlocked state), the ACT Interrupt Flag (ACTIF) of the PIR registers is set (ACTIF = 1). If the ACT Interrupt Enable (ACTIE) bit is set (ACTIE = 1), an interrupt will be generated when ACTIF becomes set. No interrupts are generated for each OSCTUNE update unless the update results in a change of Lock status or Out-of-Range status.

12.5 Register Definitions: Oscillator Module

12.5.1 ACTCON

Name: ACTCON
Address: 0x0AC

Active Clock Tuning Control Register

Bit	7	6	5	4	3	2	1	0
	ACTEN	ACTUD			ACTLOCK		ACTORS	
Access	R/W	R/W			R		R	
Reset	0	0			0		0	

Bit 7 – ACTEN Active Clock Tuning Enable

Value	Description
1	ACT enabled: HFINTOSC tuning is controlled by the ACT
0	ACT disabled: HFINTOSC tuning is controlled by the OSCTUNE register via user software

Bit 6 – ACTUD Active Clock Tuning Update Disable

Value	Condition	Description
1	ACTEN = 1	Updates to the OSCTUNE register from ACT hardware are disabled
0	ACTEN = 1	Updates to the OSCTUNE register from ACT hardware are allowed
1	ACTEN = 0	Updates to the OSCTUNE register through user software are disabled
0	ACTEN = 0	Updates to the OSCTUNE register through user software are allowed

Bit 3 – ACTLOCK Active Clock Tuning Lock Status

Value	Description
1	Locked: HFINTOSC is within ± 1% of its nominal value
0	Not locked: HFINTOSC may or may not be within ± 1% of its nominal value

Bit 1 – ACTORS Active Clock Tuning Out-of-Range Status

Value	Description
1	Value required for tuning is outside of the OSCTUNE range
0	Value required for tuning is within the OSCTUNE range

12.5.2 OSCCON1

Name: OSCCON1
Address: 0x0AD

Oscillator Control Register 1

Bit	7	6	5	4	3	2	1	0
		NOSC[2:0]			NDIV[3:0]			
Access		R/W	R/W	R/W	R/W	R/W	R/W	R/W
Reset		f	f	f	q	q	q	q

Bits 6:4 – NOSC[2:0] New Oscillator Source Request(1,2,3)
Requests a new oscillator source per the NOSC/COSC Clock Source Selection Table

Bits 3:0 – NDIV[3:0] New Divider Selection Request
Requests the new post-scaler division ratio per the NDIV/CDIV Clock Divider Selection Table

Notes:

1. The default value is determined by the RSTOSC Configuration bits. See Reset Oscillator (RSTOSC) selection table for RSTOSC selections.
2. If NOSC is written with a reserved value, the operation is ignored and neither NOSC nor NDIV is written.
3. When CSWEN = 0, these bits are read-only and cannot be changed from the RSTOSC value.

12.5.3 OSCCON2

Name: OSCCON2
Address: 0x0AE

Oscillator Control Register 2

Bit	7	6	5	4	3	2	1	0
		COSC[2:0]			CDIV[3:0]			
Access		R	R	R	R	R	R	R
Reset		f	f	f	f	f	f	f

Bits 6:4 – COSC[2:0] Current Oscillator Source Select (read-only)(1)
Indicates the current oscillator source per the NOSC/COSC Clock Source Selection Table

Bits 3:0 – CDIV[3:0] Current Divider Select (read-only)
Indicates the current post-scaler divider ratio per the NDIV/CDIV Clock Divider Table

Note:

1. The RSTOSC value is the value present when user code execution begins. Refer to the RSTOSC configuration bits or the RSTOSC selection table for the Reset Oscillator selections.

12.5.4 OSCCON3

Name: OSCCON3
Address: 0x0AF

Oscillator Control Register 3

Bit	7	6	5	4	3	2	1	0
	CSWHOLD	SOSCPWR		ORDY	NOSCR			
Access	R/W/HC	R/W		R	R			
Reset	0	1		0	0			

Bit 7 – CSWHOLD Clock Switch Hold Control

Value	Description
1	Clock switch (and interrupt) will hold when the oscillator selected by NOSC is ready
0	Clock switch will proceed when the oscillator selected by NOSC is ready

Bit 6 – SOSCPWR Secondary Oscillator Power Mode Select

Value	Description
1	Secondary Oscillator operates in High-Power mode
0	Secondary Oscillator operates in Low-Power mode

Bit 4 – ORDY Oscillator Ready (read-only)

Value	Description
1	OSCCON1 = OSCCON2; the current system clock is the clock specified by NOSC
0	A clock switch is in progress

Bit 3 – NOSCR New Oscillator is Ready (read-only)(1)

Value	Description
1	A clock switch is in progress and the oscillator selected by NOSC indicates a 'ready' condition
0	A clock switch is not in progress, or the NOSC-selected oscillator is not ready

Note:

1. If CSWHOLD = 0, the user may not see this bit set (NOSCR = 1). When the oscillator becomes ready, there may be a delay of one instruction cycle before NOSCR is set. The clock switch occurs in the next instruction cycle and NOSCR is cleared.

12.5.5 OSCTUNE

Name: OSCTUNE
Address: 0x0B0

HFINTOSC Frequency Tuning Register

Bit	7	6	5	4	3	2	1	0
			TUN[5:0]					
Access			R/W	R/W	R/W	R/W	R/W	R/W
Reset			0	0	0	0	0	0

Bits 5:0 – TUN[5:0] HFINTOSC Frequency Tuning

TUN	Condition
01 1111	Maximum frequency
•	•
•	•
•	•
00 0000	Center frequency. Oscillator is operating at the selected nominal frequency. (Default value)
•	•
•	•
•	•
10 0000	Minimum frequency

12.5.6 OSCFRQ

Name: OSCFRQ
Address: 0x0B1

HFINTOSC Frequency Selection Register

Bit	7	6	5	4	3	2	1	0
					FRQ[3:0]			
Access					R/W	R/W	R/W	R/W
Reset					0	0	0	0

Bits 3:0 – FRQ[3:0] HFINTOSC Frequency Selection

FRQ	Nominal Freq (MHz)
1111-1001	Reserved
1000	64
0111	48
0110	32
0101	16
0100	12
0011	8
0010	4
0001	2
0000	1

12.5.7 OSCSTAT

Name: OSCSTAT
Address: 0x0B2

Oscillator Status Register

Bit	7	6	5	4	3	2	1	0
	EXTOR	HFOR	MFOR	LFOR	SOR	ADOR		PLLR
Access	R	R	R	R	R	R		R
Reset	0	0	0	0	0	0		0

Bit 7 – EXTOR External Oscillator Ready

Value	Description
1	The External oscillator is ready for use
0	The External oscillator is not enabled, or is not ready for use

Bit 6 – HFOR HFINTOSC Ready

Value	Description
1	The HFINTOSC is ready for use
0	The HFINTOSC is not enabled, or it is not ready for use

Bit 5 – MFOR MFINTOSC Ready

Value	Description
1	The MFINTOSC is ready for use
0	The MFINTOSC is not enabled, or it is not ready for use

Bit 4 – LFOR LFINTOSC Ready

Value	Description
1	The LFINTOSC is ready for use
0	The LFINTOSC is not enabled, or is not ready for use

Bit 3 – SOR Secondary Oscillator (SOSC) Ready

Value	Description
1	The Secondary oscillator is ready for use
0	The Secondary oscillator is not enabled, or is not ready for use

Bit 2 – ADOR ADCRC Oscillator Ready

Value	Description
1	The ADCRC oscillator is ready for use
0	The ADCRC oscillator is not enabled, or is not ready for use

Bit 0 – PLLR PLL is Ready

Value	Description
1	The PLL is ready for use
0	The PLL is not enabled, the required input source is not ready, or the PLL is not locked

12.5.8 OSCEN

Name: OSCEN
Address: 0x0B3

Oscillator Enable Register

Bit	7	6	5	4	3	2	1	0
	EXTOEN	HFOEN	MFOEN	LFOEN	SOSCEN	ADOEN		PLLEN
Access	R/W	R/W	R/W	R/W	R/W	R/W		R/W
Reset	0	0	0	0	0	0		0

Bit 7 – EXTOEN External Oscillator Enable

Value	Description
1	EXTOSC is explicitly enabled, operating as specified by FEXTOSC
0	EXTOSC can be enabled by a peripheral request

Bit 6 – HFOEN HFINTOSC Enable

Value	Description
1	HFINTOSC is explicitly enabled, operating as specified by OSCFRQ
0	HFINTOSC can be enabled by a peripheral request

Bit 5 – MFOEN MFINTOSC Enable

Value	Description
1	MFINTOSC is explicitly enabled
0	MFINTOSC can be enabled by a peripheral request

Bit 4 – LFOEN LFINTOSC Enable

Value	Description
1	LFINTOSC is explicitly enabled
0	LFINTOSC can be enabled by a peripheral request

Bit 3 – SOSCEN Secondary Oscillator Enable

Value	Description
1	SOSC is explicitly enabled, operating as specified by SOSCPWR
0	SOSC can be enabled by a peripheral request

Bit 2 – ADOEN ADCRC Oscillator Enable

Value	Description
1	ADCRC is explicitly enabled
0	ADCRC may be enabled by a peripheral request

Bit 0 – PLLEN PLL Enable(1)

Value	Description
1	EXTOSC multiplied by the 4x system PLL is used by a peripheral request
0	EXTOSC is used by a peripheral request

Note:

1. This bit only controls external clock source supplied to the peripherals and has no effect on the system clock.

12.5.9 FSCMCON

Name: FSCMCON
Address: 0x458

Fail-Safe Clock Monitor Control and Status Register

Bit	7	6	5	4	3	2	1	0
			FSCMSFI	FSCMSEV	FSCMPFI	FSCMPEV	FSCMFFI	FSCMFEV
Access			R/W	R/W	R/W	R/W	R/W	R/W
Reset			0	0	0	0	0	0

Bit 5 – FSCMSFI SOSC Fail-Safe Clock Monitor Fault Injection(1)

Value	Description
1	SOSC FSCM clock input is blocked; FSCM will time-out
0	SOSC FSCM clock input is enabled; FSCM functions as indicated

Bit 4 – FSCMSEV SOSC Fail-Safe Clock Monitor Status(2)

Value	Description
1	SOSC clock showed a failure
0	FSCM is detecting SOSC input clocks, or the bit was cleared by the user

Bit 3 – FSCMPFI Primary Oscillator Fail-Safe Clock Monitor Fault Injection(1)

Value	Description
1	Primary Oscillator FSCM clock input is blocked; FSCM will time-out
0	Primary Oscillator FSCM clock input is enabled; FSCM functions as indicated

Bit 2 – FSCMPEV Primary Oscillator Fail-Safe Clock Monitor Status(2)

Value	Description
1	Primary Oscillator clock showed a failure
0	FSCM is detecting primary oscillator input clocks, or the bit was cleared by the user

Bit 1 – FSCMFFI FOSC Fail-Safe Clock Monitor Fault Injection(1)

Value	Description
1	FOSC FSCM clock input is blocked; FSCM will time-out
0	FOSC FSCM clock input is enabled; FSCM functions as indicated

Bit 0 – FSCMFEV FOSC Fail-Safe Clock Monitor Status(2)

Value	Description
1	FOSC clock showed a failure
0	FSCM is detecting FOSC input clocks, or the bit was cleared by the user

Notes:

1. This bit is used to demonstrate that FSCM can detect clock failure, the bit must be cleared for normal operation
2. This bit will not be cleared by hardware upon clock recovery, must be cleared by the user

12.6 Register Summary - Oscillator Module

Address	Name	Bit Pos.	7	6	5	4	3	2	1	0
0x00 ... 0xAB	Reserved									
0xAC	ACTCON	7:0	ACTEN	ACTUD			ACTLOCK		ACTORS	
0xAD	OSCCON1	7:0		NOSC[2:0]			NDIV[3:0]			
0xAE	OSCCON2	7:0		COSC[2:0]			CDIV[3:0]			
0xAF	OSCCON3	7:0	CSWHOLD	SOSCPWR		ORDY	NOSCR			
0xB0	OSCTUNE	7:0			TUN[5:0]					
0xB1	OSCFRQ	7:0					FRQ[3:0]			
0xB2	OSCSTAT	7:0	EXTOR	HFOR	MFOR	LFOR	SOR	ADOR		PLLR
0xB3	OSCEN	7:0	EXTOEN	HFOEN	MFOEN	LFOEN	SOSCEN	ADOEN		PLLEN
0xB4 ... 0x0457	Reserved									
0x0458	FSCMCON	7:0			FSCMSFI	FSCMSEV	FSCMPFI	FSCMPEV	FSCMFFI	FSCMFEV

13. CRC - Cyclic Redundancy Check Module with Memory Scanner

The Cyclic Redundancy Check (CRC) module provides a software-configurable hardware-implemented CRC checksum generator. This module includes the following features:

- Any standard CRC up to 32 bits can be used
- Configurable polynomial
- Any seed value up to 32 bits can be used
- Standard and reversed bit order available
- Augmented zeros can be added automatically or by the user
- Memory scanner for core-independent CRC calculations on any program memory locations
- Software configurable data registers for communication CRCs

13.1 Module Overview

The CRC module is coupled with a memory scanner that provides a means of performing CRC calculations in hardware, without CPU intervention. The memory scanner can automatically provide data from program Flash memory to the CRC module. The CRC module can also be operated by directly writing data to SFRs, without using a scanner.

The CRC module can be used to detect bit errors in the Flash memory using the built-in memory scanner or through user input RAM. The CRC module can accept up to a 32-bit polynomial with up to a 32-bit seed value. A CRC calculated check value (or checksum) will then be generated into the CRCOUT registers for user storage. The CRC module uses an XOR shift register implementation to perform the polynomial division required for the CRC calculation. This feature is useful for calculating CRC values of data being transmitted or received using communications peripherals such as the SPI, UART or I^2C.

13.2 Polynomial Implementation

The CRC polynomial equation is user configurable, allowing any polynomial equation to be used for the CRC checksum calculation. The polynomial and accumulator sizes are determined by the PLEN bits. For an n-bit accumulator, PLEN = n-1 and the corresponding polynomial is n+1 bits. This allows the accumulator to be any size up to 32 bits with a corresponding polynomial up to 33 bits. The MSb and LSb of the polynomial are always '1' which is forced by hardware. Therefore, the LSb of the CRCXOR Low Byte register is hardwired high and always reads as '1'.

All polynomial bits between the MSb and LSb are specified by the CRCXOR registers. For example, when using the standard CRC32, the polynomial is defined as 0x4C11DB7 $\left(x^{32}+x^{26}+x^{23}+x^{22}+x^{16}+x^{12}+x^{11}+x^{10}+x^{8}+x^{7}+x^{5}+x^{4}+x^{2}+x+1\right)$. In this polynomial, the X^{32} and X^{0} terms are the MSb and LSb controlled by hardware. The X^{31} and X^{1} terms are specified by setting the CRCXOR[31:0] bits with the corresponding polynomial value, which in this example is 0x04C11DB6. Reading the CRCXOR registers will return 0x04C11DB7 because the LSb is always '1'. Refer to the following example for more details.

Example 13-1. CRC32 Example

Standard CRC32 Polynomial (33 bits):

$\left(x^{32}+x^{26}+x^{23}+x^{22}+x^{16}+x^{12}+x^{11}+x^{10}+x^{8}+x^{7}+x^{5}+x^{4}+x^{2}+x+1\right)$

Standard 32-bit Polynomial Representation: 0x04C11DB7

```
CRCXORT = 0x04 = 0b00000100
CRCXORU = 0xC1 = 0b11000001
CRCXORH = 0x1D = 0b00011101
CRCXORL = 0xB7 = 0b1011011-  (1)
```

Data Sequence: 0x55, 0x66, 0x77, 0x88

```
DLEN = 0b00111 // Number of bits written to CRCDATA registers (Data Length)
PLEN = 0b11111 // MSb position of the polynomial (Polynomial Length)
```

Data passed into the CRC:

```
// SHIFTM = 0(Shift Mode: MSb first)
0x55 0x66 0x77 0x88 – 01010101 01100110 01110111 10001000

// SHIFTM = 1(Shift Mode: LSb first)
0x55 0x66 0x77 0x88 = 10101010 01100110 11101110 00010001
```

CRC Check Value (ACCM = 1, data is augmented with zeros)

```
// When SHIFTM = 0, CRC Check Value = 0x12D0733D
CRCOUTT = 0x12 = 0b00010010
CRCOUTU = 0xD0 = 0b11010000
CRCOUTH = 0x73 = 0b01110011
CRCOUTL = 0x3D = 0b00111101
// When SHIFTM = 1, CRC Check Value = 0xE5856F7F
CRCOUTT = 0xE5 = 0b11100101
CRCOUTU = 0x85 = 0b10000101
CRCOUTH = 0x6F = 0b01101111
CRCOUTL = 0x7F = 0b01111111
```

Note:

1. Bit 0 is unimplemented. The LSb of any CRC polynomial is always '1' and will always be treated as a '1' by the CRC for calculating the CRC check value. This bit will be read in software as a '0'.

13.3 Data Sources

Data is supplied to the CRC module using the CRCDATA registers and can either be loaded manually or automatically by using the scanner module. The length of the data word being supplied to the CRC module is specified by the DLEN bits and can be configured for data words up to 32 bits in length. The DLEN field indicates how many bits in the CRCDATA registers are valid and any bits outside of the specified data word size will be ignored. Data is moved into the CRCSHIFT registers as an intermediate to calculate the check value located in the CRCOUT registers. The SHIFTM bit is used to determine the bit order of the data being shifted into the accumulator and the bit order of the result.

Figure 13-1. CRC Process

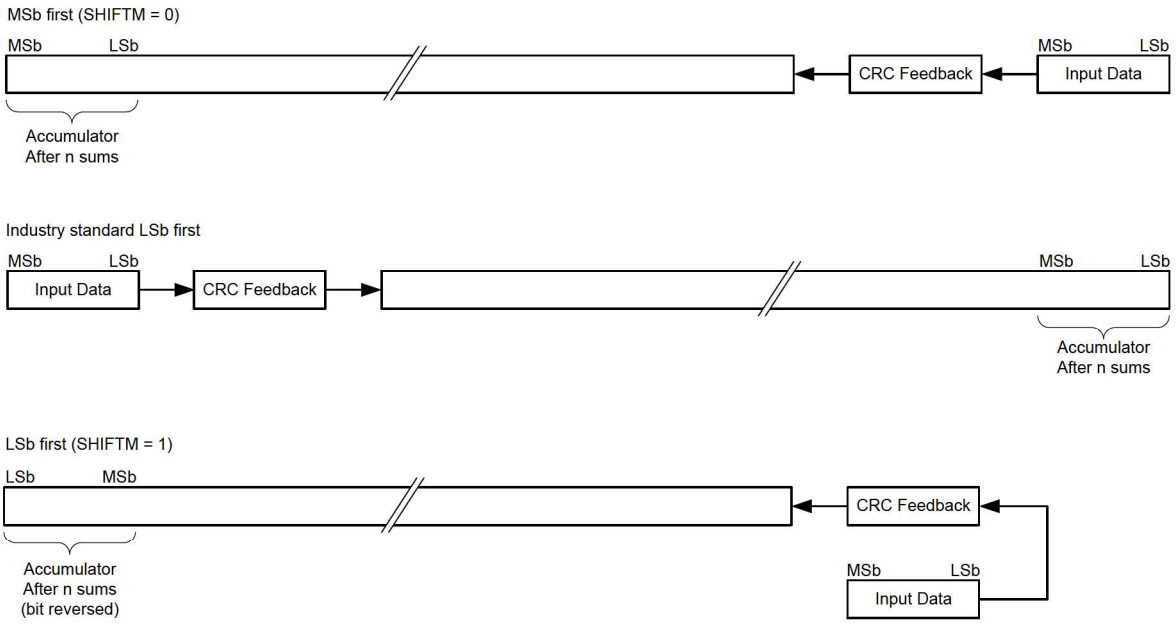

When the SHIFTM bit is not set, data will be shifted into the CRC, MSb first and the result will be big-endian. When the SHIFTM bit is set, data will be shifted into the accumulator in the reversed order (LSb first) and the result will be little-endian. The CRC module can be seeded with an initial value by setting the CRCOUT registers to the appropriate value before beginning the CRC process.

13.3.1 CRC from User Data

Data can be supplied to the CRC module by writing to the CRCDATA registers. Once data has been loaded into the CRCDATA registers, it will then be latched into the CRC Shift (CRCSHIFT) registers. If data is still being shifted from an earlier write to the CRCDATA registers and the user attempts to write more data, the most recently written data will be held in the CRCDATA registers until the previous shift has completed.

13.3.2 CRC from Flash

Data can also be supplied to the CRC module using the memory scanner, as opposed to writing the data manually using the CRCDATA registers, allowing users to automate CRC calculations. An automated scan of Program Flash Memory or Data EEPROM can be performed by configuring the scanner accordingly, to copy data into the CRCDATA registers. The user can initialize the program memory scanner as defined in Scanner Module Overview and Configuring the Scanner.

13.4 CRC Check Value

The CRC check value can be accessed using the CRCOUT registers after a CRC calculation has completed. The check value is dependent on the configuration of the ACCM and SHIFTM mode settings. When the ACCM bit is set, the CRC module will augment the data with a number of zeros equal to the length of the polynomial to align the final check value. When the ACCM bit is not set, the CRC will stop at the end of the data and no additional zeroes will be augmented to the final value. The user can manually augment a number of additional zeroes equal to the length of the polynomial by entering them into the CRCDATA register, which would yield the same check value as augmented mode. Alternatively, the expected check value can be entered at this point to make the final result equal zero.

When the CRC check value is computed with the SHIFTM (LSb first) and ACCM bits set, the final value in the CRCOUT registers will be reversed such that the LSb will be in the MSb position and vice versa (Figure 13-1).

When creating a check value to be appended to a data stream, then a reversal must be performed on the final value to achieve the correct checksum. The CRC can be used to do this reversal by following the steps below.

1. Save CRCOUT value in user RAM space.
2. Clear the CRCOUT registers.
3. Clear the CRCXOR registers.
4. Write the saved CRCOUT value to the CRCDATA input.

If the steps listed above were followed completely, the properly orientated check value will be in the CRCOUT registers as the result.

13.5 CRC Interrupt

The CRC module will generate an interrupt when the BUSY bit transitions from '1' to '0'. The CRC Interrupt Flag (CRCIF) bit of the corresponding PIR register will be set every time the BUSY bit transitions, regardless of whether or not the CRC Interrupt Enable (CRCIE) has been set. The CRCIF bit must be cleared by software by the user. If the user has the CRCIE bit set, then the CPU will jump to the Interrupt Service Routine (ISR) every time that the CRCIF bit is set.

13.6 Configuring the CRC Module

The following steps illustrate how to properly configure the CRC:

1. Determine if the automatic program memory scan will be used with the scanner or manual calculation through the SFR interface and perform the actions specified in the CRC Data Sources section.
   1.1. To configure the scanner module to be used with CRC, refer to Configuring the Scanner for more information.
2. When applicable, seed a starting CRC value into the CRCOUT registers.
3. Program the CRCXOR registers with the desired generator polynomial.
4. Program the DLEN bits with the length of the data word (refer to Figure 13-1). This value determines how many times the shifter will shift into the accumulator for each data word.
5. Program the PLEN bits with the length of the polynomial (refer to Figure 13-1).
6. Determine whether shifting in trailing zeroes is desired and set the ACCM bit accordingly.
7. Determine whether the MSb or LSb first shifting is desired, and write the SHIFTM bit accordingly.
8. Set the GO bit to begin the shifting process.
9. If manual SFR entry is used, monitor the FULL bit.
   9.1. When FULL = 0, another word of data can be written to the CRCDATA registers. It is important to note that the Most Significant Byte (CRCDATAH) must be written first if the data has more than eight bits, as the shifter will begin upon the CRCDATAL register being written.
   9.2. If the scanner is used, the scanner will automatically load words into the CRCDATA registers as needed, as long as the GO bit is set.
10. If using the Flash memory scanner, monitor the SCANIF bit of the corresponding PIR register to determine when the scanner has finished pushing data into the CRCDATA registers.
    10.1. After the scan is completed, monitor the SGO bit to determine that the CRC has been completed and the check value can be read from the CRCOUT registers.
    10.2. When both the interrupt flags are set (or both BUSY and SGO bits are cleared), the completed CRC calculation can be read from the CRCOUT registers.
11. If manual entry is used, monitor the BUSY bit to determine when the CRCOUT registers hold the valid check value.

13.6.1 Register Overlay

The CRCOUT, CRCSHIFT and CRCXOR registers are grouped together and share SFR space. Since these register groups are located within the same addresses, the SETUP bits must be configured accordingly, to access any of these registers. Refer to the CRCCON2 register for more information about how the SETUP bits can be configured to access each of the available CRC registers.

13.7 Scanner Module Overview

The scanner allows segments of the Program Flash Memory or Data EEPROM to be read out (scanned) to the CRC peripheral. The scanner module interacts with the CRC module and supplies it data, one word at a time. Data is fetched from the address range defined by SCANLADR registers up to the SCANHADR registers. The scanner begins operation when the SGO bit is set and ends when either SGO is cleared by the user or when SCANLADR increments past SCANHADR. The SGO bit is also cleared when the EN bit in the CRCCON0 register is cleared.

13.8 Scanning Modes

The interaction of the scanner with the system operation is controlled by the priority selection in the system arbiter (Refer to the **"Memory Access Scheme"** section for more details.). When using the scanner module in conjunction with the CRC module, the system arbiter should be configured such that the scanner has a higher priority than the CPU to ensure that a memory access request is granted when it occurs. Additionally, BURSTMD and TRIGEN bits also determine the operation of the scanner.

13.8.1 TRIGEN = 0, BURSTMD = 0

In this case, the memory access request is granted to the scanner if no other higher priority source is requesting access. All sources with lower priority than the scanner will get the memory access cycles that are not utilized by the scanner.

13.8.2 TRIGEN = 1, BURSTMD = 0

In this case, the memory access request is generated when the CRC module is ready to accept. The memory access request is granted to the scanner if no other higher priority source is requesting access. All sources with lower priority than the scanner will get the memory access cycles that are not utilized by the scanner.

13.8.3 TRIGEN = x, BURSTMD = 1

In this case, the memory access is always requested by the scanner. The memory access request is granted to the scanner if no other higher priority source is requesting access. The memory access cycles will not be granted to lower priority sources than the scanner until it completes operation, i.e. SGO = 0.

Important: If TRIGEN = 1 and BURSTMD = 1, the user should ensure that the trigger source is active for the scanner operation to complete.

13.8.4 WWDT Interaction

The Windowed Watch Dog Timer (WWDT) operates in the background during scanner activity. It is possible that long scans, particularly in Burst mode, may exceed the WWDT time-out period and result in an undesired device Reset. This must be considered when performing memory scans with an application that also utilizes WWDT.

13.9 Configuring the Scanner

The scanner module may be used in conjunction with the CRC module to perform a CRC calculation over a range of program memory or Data EEPROM addresses. In order to set up the scanner to work with the CRC, perform the following steps:

1. Set up the CRC module (See Configuring the CRC Module) and enable the scanner module by setting the EN bit in the SCANCON0 register.
2. Choose which memory region the scanner module should operate on and set the MREG bit appropriately.
3. If trigger is used for scanner operation, set the TRIGEN bit and select the trigger source using the SCANTRIG register. Select the trigger source using the SCANTRIG register and then set the TRIGEN bit.
4. If Burst mode of operation is desired, set the BURSTMD bit.

5. Set the SCANLADR and SCANHADR registers with the beginning and ending locations in memory that are to be scanned.
6. Select the priority level for the scanner module. (Refer to the **"System Arbitration"** and the **"Priority Lock"** sections for more details.)
   Note: The default priority levels of the system arbiter may need to be changed to ensure the scanner operates as intended and that a memory access request is granted when it occurs.
7. Both EN and GO bits in the CRCCON0 register must be enabled to use the scanner. Setting the SGO bit will start the scanner operation.

13.10 Scanner Interrupt

The scanner will trigger an interrupt when the SGO bit transitions from '1' to '0'. The SCANIF interrupt flag of one of the PIR registers is set when the last memory location is reached and the data is entered into the CRCDATA registers. The SCANIF bit must be cleared by software. The SCAN interrupt enable is the SCANIE bit of the corresponding PIE register.

13.11 Peripheral Module Disable

Both the CRC and scanner module can be disabled individually by setting the CRCMD and SCANMD bits of one of the PMD registers (see the **"Peripheral Module Disable"** chapter for more details). The SCANMD bit can be used to enable or disable the scanner module only if the SCANE configuration bit is set. If the SCANE bit is cleared, then the scanner module is not available for use and the SCANMD bit is ignored.

13.12 Register Definitions: CRC and Scanner Control

Long bit name prefixes for the CRC are shown in the table below. Refer to the "**Long Bit Names**" section in the "**Register and Bit Naming Conventions**" chapter for more information.

Table 13-1. CRC Long Bit Name Prefixes

Peripheral	Bit Name Prefix
CRC	CRC

13.12.1 CRCCON0

Name: CRCCON0
Address: 0x356

CRC Control Register 0

Bit	7	6	5	4	3	2	1	0
	EN	GO	BUSY	ACCM	SETUP[1:0]		SHIFTM	FULL
Access	R/W	R/W	R	R/W	R/W		R/W	R
Reset	0	0	0	0	0		0	0

Bit 7 – EN CRC Enable

Value	Description
1	CRC module is released from Reset
0	CRC is disabled and consumes no operating current

Bit 6 – GO CRC Start

Value	Description
1	Start CRC serial shifter
0	CRC serial shifter turned off

Bit 5 – BUSY CRC Busy

Value	Description
1	Shifting in progress or pending
0	All valid bits in shifter have been shifted into accumulator and EMPTY = 1

Bit 4 – ACCM Accumulator Mode

Value	Description
1	Data is augmented with zeros
0	Data is not augmented with zeros

Bits 4:3 – SETUP[1:0]
Register Overlay Setup

Value	Description
11	CRC Register Overlay Selection; Read / Write access to CRCOUT
10	CRC Register Overlay Selection; Read / Write access to CRCXOR
01	CRC Register Overlay Selection; Read / Write access to CRCSHIFT
00	CRC Register Overlay Selection; Read / Write access to CRCOUT

Bit 1 – SHIFTM Shift Mode

Value	Description
1	Shift right (LSb first)
0	Shift left (MSb first)

Bit 0 – FULL Data Path Full Indicator

Value	Description
1	CRCDATAT/U/H/L registers are full
0	CRCDATAT/U/H/L registers have shifted their data into the shifter

13.12.2 CRCCON1

Name: CRCCON1
Address: 0x357

CRC Control Register 1

Bit	7	6	5	4	3	2	1	0
				PLEN[4:0]				
Access				R/W	R/W	R/W	R/W	R/W
Reset				0	0	0	0	0

Bits 4:0 – PLEN[4:0] Polynomial Length
Denotes the length of the polynomial (n-1)

13.12.3 CRCCON2

Name: CRCCON2
Address: 0x358

CRC Control Register 2

Bit	7	6	5	4	3	2	1	0
				DLEN[4:0]				
Access				R/W	R/W	R/W	R/W	R/W
Reset				0	0	0	0	0

Bits 4:0 – DLEN[4:0] Data Length
Denotes the length of the data word (n-1)

13.12.4 CRCDATA

Name: CRCDATA
Address: 0x34E

CRC Data Registers

Bit	31	30	29	28	27	26	25	24
	CRCDATAT[7:0]							
Access	R/W	R/W	R/W	R/W	R/W	R/W	R/W	R/W
Reset	0	0	0	0	0	0	0	0

Bit	23	22	21	20	19	18	17	16
	CRCDATAU[7:0]							
Access	R/W	R/W	R/W	R/W	R/W	R/W	R/W	R/W
Reset	0	0	0	0	0	0	0	0

Bit	15	14	13	12	11	10	9	8
	CRCDATAH[7:0]							
Access	R/W	R/W	R/W	R/W	R/W	R/W	R/W	R/W
Reset	0	0	0	0	0	0	0	0

Bit	7	6	5	4	3	2	1	0
	CRCDATAL[7:0]							
Access	R/W	R/W	R/W	R/W	R/W	R/W	R/W	R/W
Reset	0	0	0	0	0	0	0	0

Bits 31:24 – CRCDATAT[7:0] CRC Data Top Byte

Bits 23:16 – CRCDATAU[7:0] CRC Data Upper Byte

Bits 15:8 – CRCDATAH[7:0] CRC Data High Byte

Bits 7:0 – CRCDATAL[7:0] CRC Data Low Byte

13.12.5 CRCOUT

Name: CRCOUT
Address: 0x352

CRC Output Registers

Bit	31	30	29	28	27	26	25	24
	CRCOUTT[7:0]							
Access	R/W	R/W	R/W	R/W	R/W	R/W	R/W	R/W
Reset	0	0	0	0	0	0	0	0

Bit	23	22	21	20	19	18	17	16
	CRCOUTU[7:0]							
Access	R/W	R/W	R/W	R/W	R/W	R/W	R/W	R/W
Reset	0	0	0	0	0	0	0	0

Bit	15	14	13	12	11	10	9	8
	CRCOUTH[7:0]							
Access	R/W	R/W	R/W	R/W	R/W	R/W	R/W	R/W
Reset	0	0	0	0	0	0	0	0

Bit	7	6	5	4	3	2	1	0
	CRCOUTL[7:0]							
Access	R/W	R/W	R/W	R/W	R/W	R/W	R/W	R/W
Reset	0	0	0	0	0	0	0	0

Bits 31:24 – CRCOUTT[7:0] CRC Output Register Top Byte
Writing to this register writes the Most Significant Byte of the CRC output register. Reading from this register reads the Most Significant Byte of the CRC output.

Bits 23:16 – CRCOUTU[7:0] CRC Output Register Upper Byte

Bits 15:8 – CRCOUTH[7:0] CRC Output Register High Byte

Bits 7:0 – CRCOUTL[7:0] CRC Output Register Low Byte
Writing to this register writes the Least Significant Byte of the CRC output register. Reading from this register reads the Least Significant Byte of the CRC output.

13.12.6 CRCSHIFT

Name: CRCSHIFT
Address: 0x352

CRC Shift Registers

Bit	31	30	29	28	27	26	25	24
	CRCSHIFTT[7:0]							
Access	R	R	R	R	R	R	R	R
Reset	0	0	0	0	0	0	0	0

Bit	23	22	21	20	19	18	17	16
	CRCSHIFTU[7:0]							
Access	R	R	R	R	R	R	R	R
Reset	0	0	0	0	0	0	0	0

Bit	15	14	13	12	11	10	9	8
	CRCSHIFTH[7:0]							
Access	R	R	R	R	R	R	R	R
Reset	0	0	0	0	0	0	0	0

Bit	7	6	5	4	3	2	1	0
	CRCSHIFTL[7:0]							
Access	R	R	R	R	R	R	R	R
Reset	0	0	0	0	0	0	0	0

Bits 31:24 – CRCSHIFTT[7:0] CRC Shift Register Top Byte
Reading from this register reads the Most Significant Byte of the CRC Shifter.

Bits 23:16 – CRCSHIFTU[7:0] CRC Shift Register Upper Byte

Bits 15:8 – CRCSHIFTH[7:0] CRC Shift Register High Byte

Bits 7:0 – CRCSHIFTL[7:0] CRC Shift Register Low Byte
Reading from this register reads the Least Significant Byte of the CRC Shifter.

13.12.7 CRCXOR

Name: CRCXOR
Address: 0x352

CRC XOR Registers

Bit	31	30	29	28	27	26	25	24
	CRCXORT[7:0]							
Access	R/W	R/W	R/W	R/W	R/W	R/W	R/W	R/W
Reset	0	0	0	0	0	0	0	0

Bit	23	22	21	20	19	18	17	16
	CRCXORU[7:0]							
Access	R/W	R/W	R/W	R/W	R/W	R/W	R/W	R/W
Reset	0	0	0	0	0	0	0	0

Bit	15	14	13	12	11	10	9	8
	CRCXORH[7:0]							
Access	R/W	R/W	R/W	R/W	R/W	R/W	R/W	R/W
Reset	0	0	0	0	0	0	0	0

Bit	7	6	5	4	3	2	1	0
	CRCXORL[7:0]							
Access	R/W	R/W	R/W	R/W	R/W	R/W	R/W	R/W
Reset	0	0	0	0	0	0	0	0

Bits 31:24 – CRCXORT[7:0] XOR of Polynomial Term XN Enable Top Byte

Bits 23:16 – CRCXORU[7:0] XOR of Polynomial Term XN Enable Upper Byte

Bits 15:8 – CRCXORH[7:0] XOR of Polynomial Term XN Enable High Byte

Bits 7:0 – CRCXORL[7:0] XOR of Polynomial Term XN Enable Low Byte

13.12.8 SCANCON0

Name: SCANCON0
Address: 0x360

Scanner Access Control Register 0

Bit	7	6	5	4	3	2	1	0
	EN	TRIGEN	SGO			MREG	BURSTMD	BUSY
Access	R/W	R/W	R/W/HC			R/W	R/W	R/W
Reset	0	0	0			1	0	0

Bit 7 – EN Scanner Enable(1)

Value	Description
1	Scanner is enabled
0	Scanner is disabled

Bit 6 – TRIGEN Scanner Trigger Enable(2,5)

Value	Description
1	Scanner trigger is enabled
0	Scanner trigger is disabled

Bit 5 – SGO Scanner GO(3,4)

Value	Description
1	When the CRC is ready, the Memory region set by the MREG bit will be accessed and data is passed to the CRC peripheral.
0	Scanner operations will not occur

Bit 2 – MREG Scanner Memory Region Select(2)

Value	Description
1	Scanner address points to Data EEPROM
0	Scanner address points to Program Flash Memory

Bit 1 – BURSTMD Scanner Burst Mode(5)

Value	Description
1	Memory access request to the CPU Arbiter is always true
0	Memory access request to the CPU Arbiter is dependent on the CRC request and Trigger

Bit 0 – BUSY Scanner Busy Indicator

Value	Description
1	Scanner cycle is in process
0	Scanner cycle is compete (or never started)

Notes:

1. Setting EN = 0 does not affect any other register content.
2. Scanner trigger selection can be set using the SCANTRIG register.
3. This bit can be cleared in software. It is cleared in hardware when LADR > HADR (and a data cycle is not occurring) or when CRCGO = 0.
4. CRCEN and CRCGO bits must be set before setting the SGO bit.
5. See Table 13-2.

Table 13-2. Scanner Operating Modes

TRIGEN	BURSTMD	Scanner Operation
0	0	Memory access is requested when the CRC module is ready to accept data; the request is granted if no other higher priority source request is pending.
1	0	Memory access is requested when the CRC module is ready to accept data and trigger selection is true; the request is granted if no other higher priority source request is pending.
x	1	Memory access is always requested; the request is granted if no other higher priority source request is pending.
Note: Refer to the **"System Arbitration"** and the **"Memory Access Scheme"** sections for more details about Priority selection and Memory Access Scheme.		

13.12.9 SCANLADR

Name: SCANLADR

Scan Low Address Registers

Bit	23	22	21	20	19	18	17	16
			SCANLADRU[5:0]					
Acccss			R/W	R/W	R/W	R/W	R/W	R/W
Reset			0	0	0	0	0	0

Bit	15	14	13	12	11	10	9	8
	SCANLADRH[7:0]							
Access	R/W	R/W	R/W	R/W	R/W	R/W	R/W	R/W
Reset	0	0	0	0	0	0	0	0

Bit	7	6	5	4	3	2	1	0
	SCANLADRL[7:0]							
Access	R/W	R/W	R/W	R/W	R/W	R/W	R/W	R/W
Reset	0	0	0	0	0	0	0	0

Bits 21:16 – SCANLADRU[5:0] Scan Start/Current Address upper byte
Upper bits of the current address to be fetched from, value increments on each fetch of memory.

Bits 15:8 – SCANLADRH[7:0] Scan Start/Current Address high byte
High byte of the current address to be fetched from, value increments on each fetch of memory.

Bits 7:0 – SCANLADRL[7:0] Scan Start/Current Address low byte
Low byte of the current address to be fetched from, value increments on each fetch of memory.

Notes:

1. Registers SCANLADRU/H/L form a 22-bit value, but are not guarded for atomic or asynchronous access; registers may only be read or written while SGO = 0.
2. While SGO = 1, writing to this register is ignored.

13.12.10 SCANHADR

Name: SCANHADR

Scan High Address Registers

Bit	23	22	21	20	19	18	17	16
			SCANHADRU[5:0]					
Acccss			R/W	R/W	R/W	R/W	R/W	R/W
Reset			1	1	1	1	1	1

Bit	15	14	13	12	11	10	9	8
	SCANHADRH[7:0]							
Access	R/W	R/W	R/W	R/W	R/W	R/W	R/W	R/W
Reset	1	1	1	1	1	1	1	1

Bit	7	6	5	4	3	2	1	0
	SCANHADRL[7:0]							
Access	R/W	R/W	R/W	R/W	R/W	R/W	R/W	R/W
Reset	1	1	1	1	1	1	1	1

Bits 21:16 – SCANHADRU[5:0] Scan End Address
Upper bits of the address at the end of the designated scan

Bits 15:8 – SCANHADRH[7:0] Scan End Address
High byte of the address at the end of the designated scan

Bits 7:0 – SCANHADRL[7:0] Scan End Address
Low byte of the address at the end of the designated scan

Notes:

1. Registers SCANHADRU/H/L form a 22-bit value but are not guarded for atomic or asynchronous access; registers may only be read or written while SGO = 0.
2. While SGO = 1, writing to this register is ignored.

13.12.11 SCANTRIG

Name: SCANTRIG
Address: 0x361

SCAN Trigger Selection Register

Bit	7	6	5	4	3	2	1	0
					TSEL[3:0]			
Access					R/W	R/W	R/W	R/W
Reset					0	0	0	0

Bits 3:0 – TSEL[3:0] Scanner Data Trigger Input Selection

Table 13-3. Scanner Data Trigger Input Sources

TSEL Value	Trigger Input Sources
1111 - 1100	—
1011	CLC4_OUT
1010	CLC3_OUT
1001	CLC2_OUT
1000	CLC1_OUT
0111	SMT1_OUT
0110	TMR4_Postscaler_OUT
0101	TMR3_OUT
0100	TMR2_Postscaler_OUT
0011	TMR1_OUT
0010	TMR0_OUT
0001	CLCKREF_OUT
0000	LFINTOSC(1)

Note:

1. The number of implemented bits varies by device.

13.13 Register Summary - CRC

Address	Name	Bit Pos.	7	6	5	4	3	2	1	0
0x00 ... 0x034D	Reserved									
0x034E	CRCDATA	7:0	CRCDATAL[7:0]							
		15:8	CRCDATAH[7:0]							
		23:16	CRCDATAU[7:0]							
		31:24	CRCDATAT[7:0]							
0x0352	CRCOUT	7:0	CRCOUTL[7:0]							
		15:8	CRCOUTH[7:0]							
		23:16	CRCOUTU[7:0]							
		31:24	CRCOUTT[7:0]							
0x0352	CRCSHIFT	7:0	CRCSHIFTL[7:0]							
		15:8	CRCSHIFTH[7:0]							
		23:16	CRCSHIFTU[7:0]							
		31:24	CRCSHIFTT[7:0]							
0x0352	CRCXOR	7:0	CRCXORL[7:0]							
		15:8	CRCXORH[7:0]							
		23:16	CRCXORU[7:0]							
		31:24	CRCXORT[7:0]							
0x0356	CRCCON0	7:0	EN	GO	BUSY	ACCM	SETUP[1:0]		SHIFTM	FULL
0x0357	CRCCON1	7:0				PLEN[4:0]				
0x0358	CRCCON2	7:0				DLEN[4:0]				
0x0359 ... 0x035F	Reserved									
0x0360	SCANCON0	7:0	EN	TRIGEN	SGO			MREG	BURSTMD	BUSY
0x0361	SCANTRIG	7:0					TSEL[3:0]			

14. Resets

There are multiple ways to reset the device:

- Power-on Reset (POR)
- Brown-out Reset (BOR)
- Low-Power Brown-out Reset (LPBOR)
- $\overline{\text{MCLR}}$ Reset
- WDT Reset
- RESET instruction
- Stack Overflow
- Stack Underflow
- Programming mode exit
- Memory Execution Violation Reset
- Main LDO Voltage Regulator Reset
- Configuration Memory Reset

A simplified block diagram of the On-Chip Reset Circuit is shown in the block diagram below.

Figure 14-1. Simplified Block Diagram of On-Chip Reset Circuit

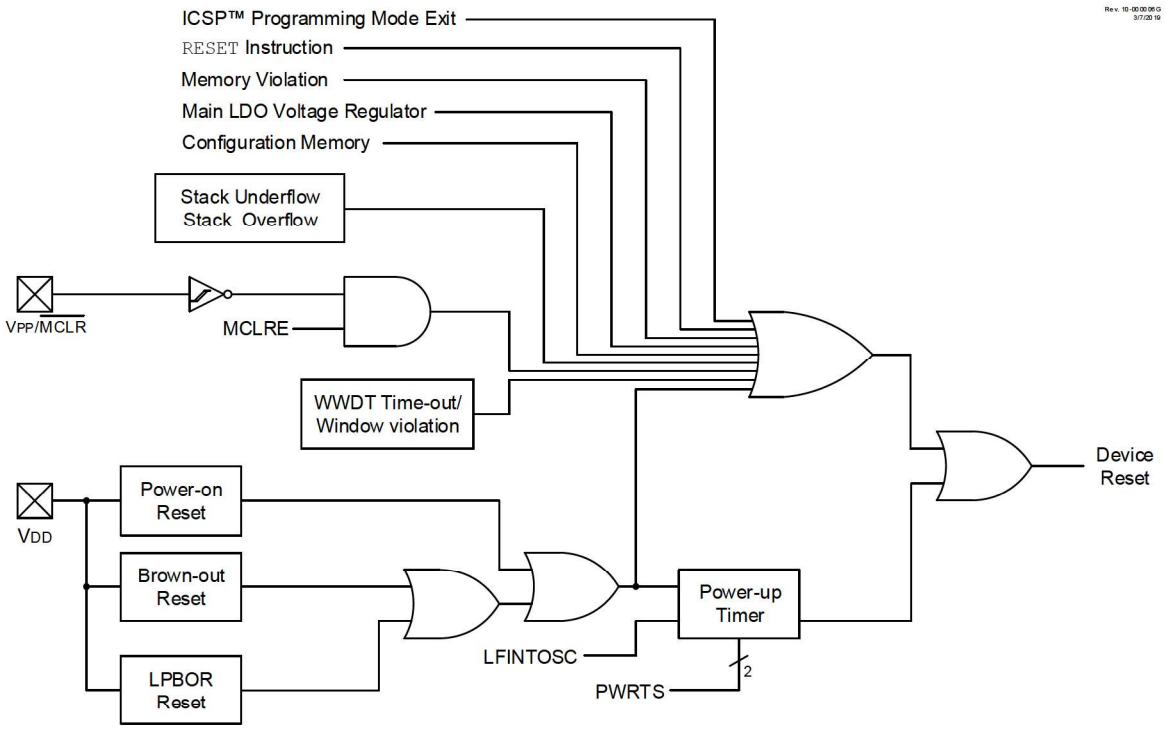

Note:

1. See BOR Operating Modes table for BOR active conditions.

14.1 Power-on Reset (POR)

The POR circuit holds the device in Reset until V_{DD} has reached an acceptable level for minimum operation. Slow rising V_{DD}, fast operating speeds or analog performance may require greater than minimum V_{DD}. The PWRT, BOR or $\overline{\text{MCLR}}$ features can be used to extend the start-up period until all device operation conditions have been met. The $\overline{\text{POR}}$ bit will be set to '0' if a Power-on Reset has occurred.

14.2 Brown-out Reset (BOR)

The BOR circuit holds the device in Reset when V_{DD} reaches a selectable minimum level. Between the POR and BOR, complete voltage range coverage for execution protection can be implemented. The $\overline{BOR}$ bit will be set to '0' if a Brown-out Reset has occurred.

The Brown-out Reset module has four operating modes controlled by the BOREN Configuration bits. The four operating modes are:

- BOR is always on
- BOR is off when in Sleep
- BOR is controlled by software
- BOR is always off

Refer to the BOR Operating Modes table for more information.

A V_{DD} noise rejection filter prevents the BOR from triggering on small events. If V_{DD} falls below V_{BOR} for a duration greater than parameter T_{BORDC}, the device will reset. Refer to the **"Electrical Specifications"** chapter for more details.

14.2.1 BOR is Always ON

When the BOREN Configuration bits are programmed to 'b11, the BOR is always on. The device start-up will be delayed until the BOR is ready and V_{DD} is higher than the BOR threshold.

BOR protection is active during Sleep. The BOR does not delay wake-up from Sleep.

14.2.2 BOR is OFF in Sleep

When the BOREN Configuration bits are programmed to 'b10, the BOR is on, except in Sleep. The device start-up will be delayed until the BOR is ready and V_{DD} is higher than the BOR threshold.

BOR protection is not active during Sleep. The device wake-up will be delayed until the BOR is ready.

14.2.3 BOR Controlled by Software

When the BOREN Configuration bits are programmed to 'b01, the BOR is controlled by the SBOREN bit. The device start-up is not delayed by the BOR ready condition or the V_{DD} level.

BOR protection begins as soon as the BOR circuit is ready. The status of the BOR circuit is reflected in the BORRDY bit.

BOR protection selected by SBOREN bit is unchanged by Sleep.

14.2.4 BOR is always OFF

When the BOREN Configuration bits are programmed to 'b00, the BOR is off at all times. The device start-up is not delayed by the BOR ready condition or the V_{DD} level.

Table 14-1. BOR Operating Modes

BOREN	SBOREN	Device Mode	BOR Mode	Instruction Execution upon:	
				Release of POR	Wake-up from Sleep
11(1)	X	X	Active	Wait for release of BOR (BORRDY = 1)	Begins immediately
10	X	Awake	Active	Wait for release of BOR (BORRDY = 1)	N/A
		Sleep	Hibernate	N/A	Wait for release of BOR (BORRDY = 1)

.....continued					
BOREN	SBOREN	Device Mode	BOR Mode	Instruction Execution upon:	
				Release of POR	Wake-up from Sleep
01	1	X	Active	Wait for release of BOR (BORRDY = 1)	Begins immediately
	0	X	Hibernate		
00	X	X	Disabled	Begins immediately	

Note:

1. In this specific case, “Release of POR” and “Wake-up from Sleep”, there is no BOR ready delay in start-up. The BOR ready flag, (BORRDY = 1), will be set before the CPU is ready to execute instructions because the BOR circuit is forced on by the BOREN bits

Figure 14-2. Brown-out Situations

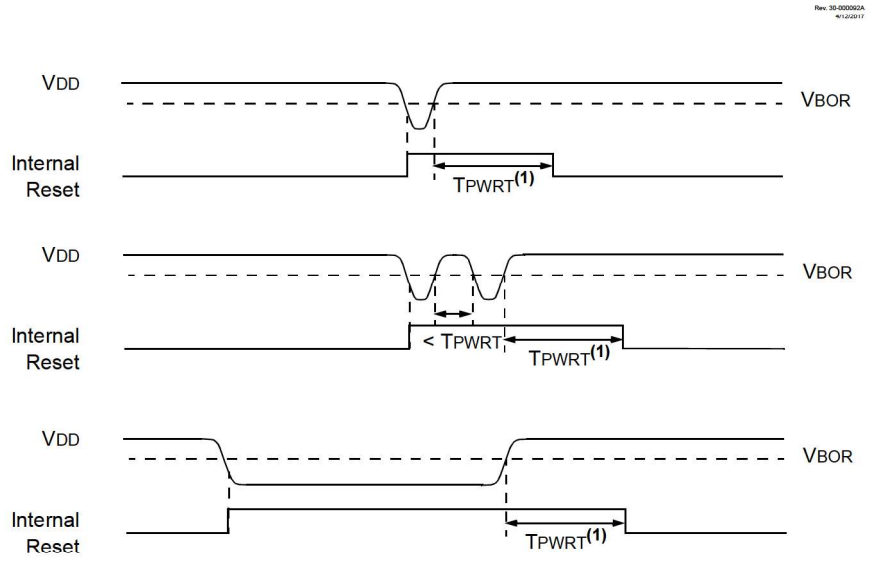

Note:

1. T_{PWRT} delay only if the Configuration bits enable the Power-up Timer.

14.2.5 BOR and Bulk Erase

BOR is forced ON during PFM Bulk Erase operations to make sure that the system code protection cannot be compromised by reducing V_{DD}.

During Bulk Erase, the BOR is enabled at the lowest BOR threshold level, even if it is configured to some other value. If V_{DD} falls, the erase cycle will be aborted, but the device will not be reset.

14.3 Low-Power Brown-out Reset (LPBOR)

The Low-Power Brown-out Reset (LPBOR) provides an additional BOR circuit for low-power operation. Refer to the figure below to see how the BOR interacts with other modules.

The LPBOR is used to monitor the external V_{DD} pin. When too low of a voltage is detected, the device is held in Reset.

Figure 14-3. LPBOR, BOR, POR Relationship

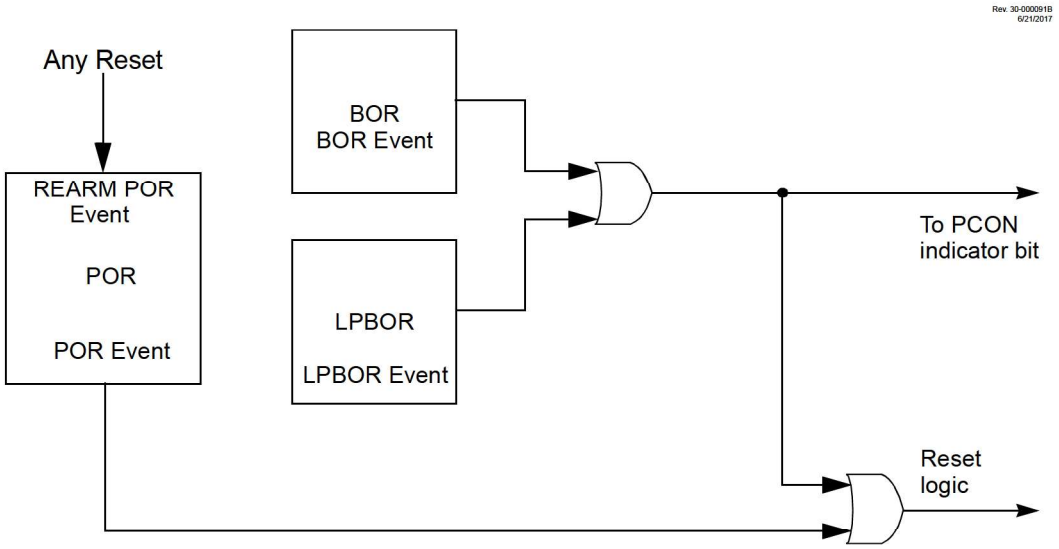

14.3.1 Enabling LPBOR

The LPBOR is controlled by the $\overline{\text{LPBOREN}}$ Configuration bit. When the device is erased, the LPBOR module defaults to disabled.

14.3.2 LPBOR Module Output

The output of the LPBOR module indicates whether or not a Reset is to be asserted. This signal is OR'd with the Reset signal of the BOR module to provide the generic $\overline{\text{BOR}}$ signal, which goes to the PCON0 register and to the power control block.

14.4 $\overline{\text{MCLR}}$ Reset

$\overline{\text{MCLR}}$ is an optional external input that can reset the device. The $\overline{\text{MCLR}}$ function is controlled by the MCLRE and LVP Configuration bits (see table below). The RMCLR bit will be set to '0' if a $\overline{\text{MCLR}}$ has occurred.

Table 14-2. $\overline{\text{MCLR}}$ Configuration

MCLRE	LVP	$\overline{\text{MCLR}}$
x	1	Enabled
1	0	Enabled
0	0	Disabled

14.4.1 $\overline{\text{MCLR}}$ Enabled

When $\overline{\text{MCLR}}$ is enabled and the pin is held low, the device is held in Reset. The $\overline{\text{MCLR}}$ pin is connected to V_{DD} through an internal weak pull-up.

The device has a noise filter in the $\overline{\text{MCLR}}$ Reset path. The filter will detect and ignore small pulses.

Important: An internal Reset event (RESET instruction, BOR, WWDT, POR, STKOVF, STKUNF) does not drive the $\overline{\text{MCLR}}$ pin low.

14.4.2 MCLR Disabled

When MCLR is disabled, the MCLR pin becomes input-only and pin functions such as internal weak pull-ups are under software control.

14.5 Windowed Watchdog Timer (WWDT) Reset

The Windowed Watchdog Timer generates a Reset if the firmware does not issue a CLRWDT instruction within the time-out period or window set. The TO and PD bits in the STATUS register and the RWDT bit are changed to indicate a WDT Reset. The WDTWV bit indicates if the WDT Reset has occurred due to a time-out or a window violation.

14.6 RESET Instruction

A RESET instruction will cause a device Reset. The RI bit will be set to '0'. See Table 14-3 for default conditions after a RESET instruction has occurred.

14.7 Stack Overflow/Underflow Reset

The device can be reset when the Stack Overflows or Underflows. The STKOVF or STKUNF bits indicate the Reset condition. These Resets are enabled by setting the STVREN Configuration bit.

14.8 Programming Mode Exit

Upon exit of Programming mode, the device will operate as if a POR had just occurred.

14.9 Power-up Timer (PWRT)

The Power-up Timer provides a selected time-out duration on POR or Brown-out Reset.

The device is held in Reset as long as PWRT is active. The PWRT delay allows additional time for V_{DD} to rise to an acceptable level. The Power-up Timer is selected by setting the PWRTS Configuration bits accordingly.

The Power-up Timer starts after the release of the POR and BOR/LPBOR if enabled, as shown in Figure 14-4.

14.10 Start-up Sequence

Upon the release of a POR or BOR, the following must occur before the device will begin executing:

1. Power-up Timer runs to completion (if enabled).
2. Oscillator Start-up Timer runs to completion (if required for selected oscillator source).
3. MCLR must be released (if enabled).

The total time-out will vary based on the oscillator configuration and Power-up Timer configuration.

The Power-up Timer and Oscillator Start-up Timer run independently of MCLR Reset. If MCLR is kept low long enough, the Power-up Timer and Oscillator Start-up Timer will expire. Upon bringing MCLR high, the device will begin execution after 10 F_{OSC} cycles (see figure below). This is useful for testing purposes or to synchronize more than one device operating in parallel.

Figure 14-4. Reset Start-up Sequence

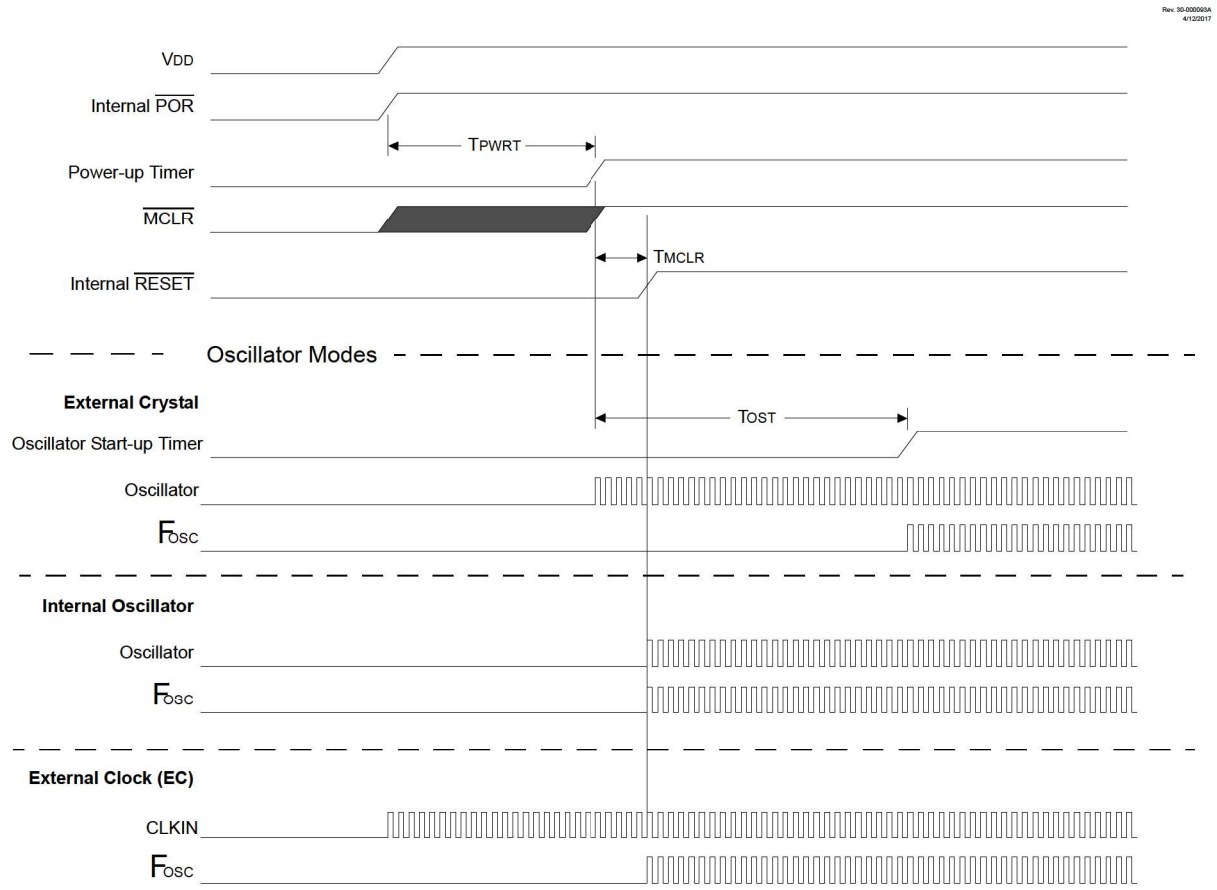

14.10.1 Memory Execution Violation

A memory execution violation Reset occurs if executing an instruction being fetched from outside the valid execution area. The invalid execution areas are:

1. Addresses outside implemented program memory
2. Storage Area Flash (SAF) inside program memory, if it is enabled

When a memory execution violation is generated, the device is reset and the $\overline{\text{MEMV}}$ bit is cleared to signal the cause of the Reset. The $\overline{\text{MEMV}}$ bit must be set in the user code after a memory execution violation Reset has occurred to detect further violation Resets.

14.11 Determining the Cause of a Reset

Upon any Reset, multiple bits in the STATUS and PCON0 registers are updated to indicate the cause of the Reset. The following table shows the Reset conditions of these registers.

Table 14-3. Reset Condition for Special Registers

Condition	Program Counter	STATUS Register(1,2)	PCON0 Register	PCON1 Register
Power-on Reset	0	-110 0000	0011 110x	---- -111
Brown-out Reset	0	-110 0000	0011 11u0	---- -u1u

.....continued

Condition	Program Counter	STATUS Register(1,2)	PCON0 Register	PCON1 Register
$\overline{MCLR}$ Reset during normal operation	0	-uuu uuuu	uuuu 0uuu	---- -uuu
$\overline{MCLR}$ Reset during Sleep	0	-10u uuuu	uuuu 0uuu	---- -uuu
WDT Time-out Reset	0	-0uu uuuu	uuu0 uuuu	---- -uuu
WDT Wake-up from Sleep	PC + 2	-00u uuuu	uuuu uuuu	---- -uuu
WWDT Window Violation Reset	0	-uuu uuuu	uu0u uuuu	---- -uuu
Interrupt Wake-up from Sleep	PC + 2(3)	-10u uuuu	uuuu uuuu	---- -uuu
RESET Instruction Executed	0	-uuu uuuu	uuuu u0uu	---- -uuu
Stack Overflow Reset (STVREN = 1)	0	-uuu uuuu	1uuu uuuu	---- -uuu
Stack Underflow Reset (STVREN = 1)	0	-uuu uuuu	u1uu uuuu	---- -uuu
Data Protection (Fuse Fault)	0	-uuu uuuu	uuuu uuuu	---- -uu0
VREG or ULP Ready Fault	0	-110 0000	0011 110u	---- -0u1
Memory Violation Reset	0	-uuu uuuu	uuuu uuuu	---- -u0u

Legend: u = unchanged, x = unknown, - = unimplemented bit, reads as '0'.

Notes:

1. If a Status bit is not implemented, that bit will be read as '0'.
2. Status bits Z, C, DC are reset by POR/BOR.
3. When the wake-up is due to an interrupt and Global Interrupt Enable bit (GIE) is set, the return address is pushed on the stack and PC is loaded with the corresponding interrupt vector (depending on source, high or low priority) after execution of PC + 2.

14.12 Power Control (PCON0/PCON1) Registers

The Power Control (PCON0/PCON1) registers contains flag bits to differentiate between the following reset events:

- Brown-out Reset ($\overline{BOR}$)
- Power-on Reset ($\overline{POR}$)
- Reset Instruction Reset ($\overline{RI}$)
- $\overline{MCLR}$ Reset ($\overline{RMCLR}$)
- Watchdog Timer Reset ($\overline{RWDT}$)
- Watchdog Window Violation ($\overline{WDTWV}$)
- Stack Underflow Reset (STKUNF)
- Stack Overflow Reset (STKOVF)
- Configuration Memory Reset ($\overline{RCM}$)

- Memory Violation Reset (MEMV)
- Main LDO Voltage Regulator Reset (RVREG)

Hardware will change the corresponding register bit or bits as a result of the Reset event. Bits for other Reset events remain unchanged. See Table 14-3 for more details.

Software should reset the bit to the Inactive state after restart. (Hardware will not reset the bit.)

Software may also set any PCON0 bit to the Active state, so that user code may be tested, but no Reset action will be generated.

14.13 Register Definitions: Power Control

14.13.1 BORCON

Name: BORCON
Address: 0x049

Brown-out Reset Control Register

Bit	7	6	5	4	3	2	1	0
	SBOREN							BORRDY
Access	R/W							R
Reset	1							q

Bit 7 – SBOREN Software Brown-out Reset Enable
Reset States: POR/BOR = 1
All Other Resets = u

Value	Condition	Description
–	If BOREN ≠ 01	SBOREN is read/write, but has no effect on the BOR
1	If BOREN = 01	BOR Enabled
0	If BOREN = 01	BOR Disabled

Bit 0 – BORRDY Brown-out Reset Circuit Ready Status
Reset States: POR/BOR = q
All Other Resets = u

Value	Description
1	The Brown-out Reset Circuit is active and armed
0	The Brown-out Reset Circuit is disabled or is warming up

14.13.2 PCON0

Name: PCON0
Address: 0x4F0

Power Control Register 0

Bit	7	6	5	4	3	2	1	0
	STKOVF	STKUNF	$\overline{\text{WDTWV}}$	$\overline{\text{RWDT}}$	$\overline{\text{RMCLR}}$	$\overline{\text{RI}}$	$\overline{\text{POR}}$	$\overline{\text{BOR}}$
Access	R/W/HS	R/W/HS	R/W/HC	R/W/HC	R/W/HC	R/W/HC	R/W/HC	R/W/HC
Reset	0	0	1	1	1	1	0	q

Bit 7 – STKOVF Stack Overflow Flag
Reset States: POR/BOR = 0
All Other Resets = q

Value	Description
1	A Stack Overflow occurred (more CALLs than fit on the stack)
0	A Stack Overflow has not occurred or set to '0' by firmware

Bit 6 – STKUNF Stack Underflow Flag
Reset States: POR/BOR = 0
All Other Resets = q

Value	Description
1	A Stack Underflow occurred (more RETURNs than CALLs)
0	A Stack Underflow has not occurred or set to '0' by firmware

Bit 5 – $\overline{\text{WDTWV}}$ Watchdog Window Violation Flag
Reset States: POR/BOR = 1
All Other Resets = q

Value	Description
1	A WDT window violation has not occurred or set to '1' by firmware
0	A CLRWDT instruction was issued when the WDT Reset window was closed (set to '0' in hardware when a WDT window violation Reset occurs)

Bit 4 – $\overline{\text{RWDT}}$ WDT Reset Flag
Reset States: POR/BOR = 1
All Other Resets = q

Value	Description
1	A WDT overflow/time-out Reset has not occurred or set to '1' by firmware
0	A WDT overflow/time-out Reset has occurred (set to '0' in hardware when a WDT Reset occurs)

Bit 3 – $\overline{\text{RMCLR}}$ $\overline{\text{MCLR}}$ Reset Flag
Reset States: POR/BOR = 1
All Other Resets = q

Value	Description
1	A $\overline{\text{MCLR}}$ Reset has not occurred or set to '1' by firmware
0	A $\overline{\text{MCLR}}$ Reset has occurred (set to '0' in hardware when a $\overline{\text{MCLR}}$ Reset occurs)

Bit 2 – $\overline{\text{RI}}$ RESET Instruction Flag
Reset States: POR/BOR = 1
All Other Resets = q

Value	Description
1	A RESET instruction has not been executed or set to '1' by firmware
0	A RESET instruction has been executed (set to '0' in hardware upon executing a RESET instruction)

Bit 1 – $\overline{\text{POR}}$ Power-on Reset Status

Reset States: POR/BOR = 0
All Other Resets = u

Value	Description
1	No Power-on Reset occurred or set to '1' by firmware
0	A Power-on Reset occurred (set to '0' in hardware when a Power-on Reset occurs)

Bit 0 – $\overline{\text{BOR}}$ Brown-out Reset Status
Reset States: POR/BOR = q
All Other Resets = u

Value	Description
1	No Brown-out Reset occurred or set to '1' by firmware
0	A Brown-out Reset occurred (set to '0' in hardware when a Brown-out Reset occurs)

14.13.3 PCON1

Name: PCON1
Address: 0x4F1

Power Control Register 1

Bit	7	6	5	4	3	2	1	0
						$\overline{\text{RVREG}}$	$\overline{\text{MEMV}}$	$\overline{\text{RCM}}$
Access						R/W/HC	R/W/HC	R/W/HC
Reset						1	0	q

Bit 2 – $\overline{\text{RVREG}}$ Main LDO Voltage Regulator Reset Flag
Reset States: POR/BOR = 1
All Other Resets = q

Value	Description
1	No LDO or ULP “ready” Reset has occurred or set to ‘1’ by firmware
0	LDO or ULP “ready” Reset has occurred (VDDCORE reached its minimum spec)

Bit 1 – $\overline{\text{MEMV}}$ Memory Violation Reset Flag
Reset States: POR/BOR = 0
All Other Resets = u

Value	Description
1	No memory violation Reset occurred or set to ‘1’ by firmware
0	A memory violation Reset occurred (set to ‘0’ in hardware when a Memory Violation occurs)

Bit 0 – $\overline{\text{RCM}}$ Configuration Memory Reset Flag
Reset States: POR/BOR = q
All Other Resets = u

Value	Description
1	A Reset occurred due to corruption of the configuration and/or calibration data latches
0	The configuration and calibration latches have not been corrupted

14.14 Register Summary - BOR Control and Power Control

Address	Name	Bit Pos.	7	6	5	4	3	2	1	0
0x00 ... 0x48	Reserved									
0x49	BORCON	7:0	SBOREN							BORRDY
0x4A ... 0x04EF	Reserved									
0x04F0	PCON0	7:0	STKOVF	STKUNF	WDTWV	RWDT	RMCLR	RI	POR	BOR
0x04F1	PCON1	7:0						RVREG	MEMV	RCM

15. WWDT - Windowed Watchdog Timer

A Watchdog Timer (WDT) is a system timer that generates a Reset if the firmware does not issue a CLRWDT instruction within the time-out period. A Watchdog Timer is typically used to recover the system from unexpected events. The Windowed Watchdog Timer (WWDT) differs from non-windowed operation in that CLRWDT instructions are only accepted when they are performed within a specific window during the time-out period.

The WWDT has the following features:

- Selectable clock source
- Multiple operating modes
  - WWDT is always on
  - WWDT is off when in Sleep
  - WWDT is controlled by software
  - WWDT is always off
- Configurable time-out period from 1 ms to 256s (nominal)
- Configurable window size from 12.5% to 100% of the time-out period
- Multiple Reset conditions

Figure 15-1. Windowed Watchdog Timer Block Diagram

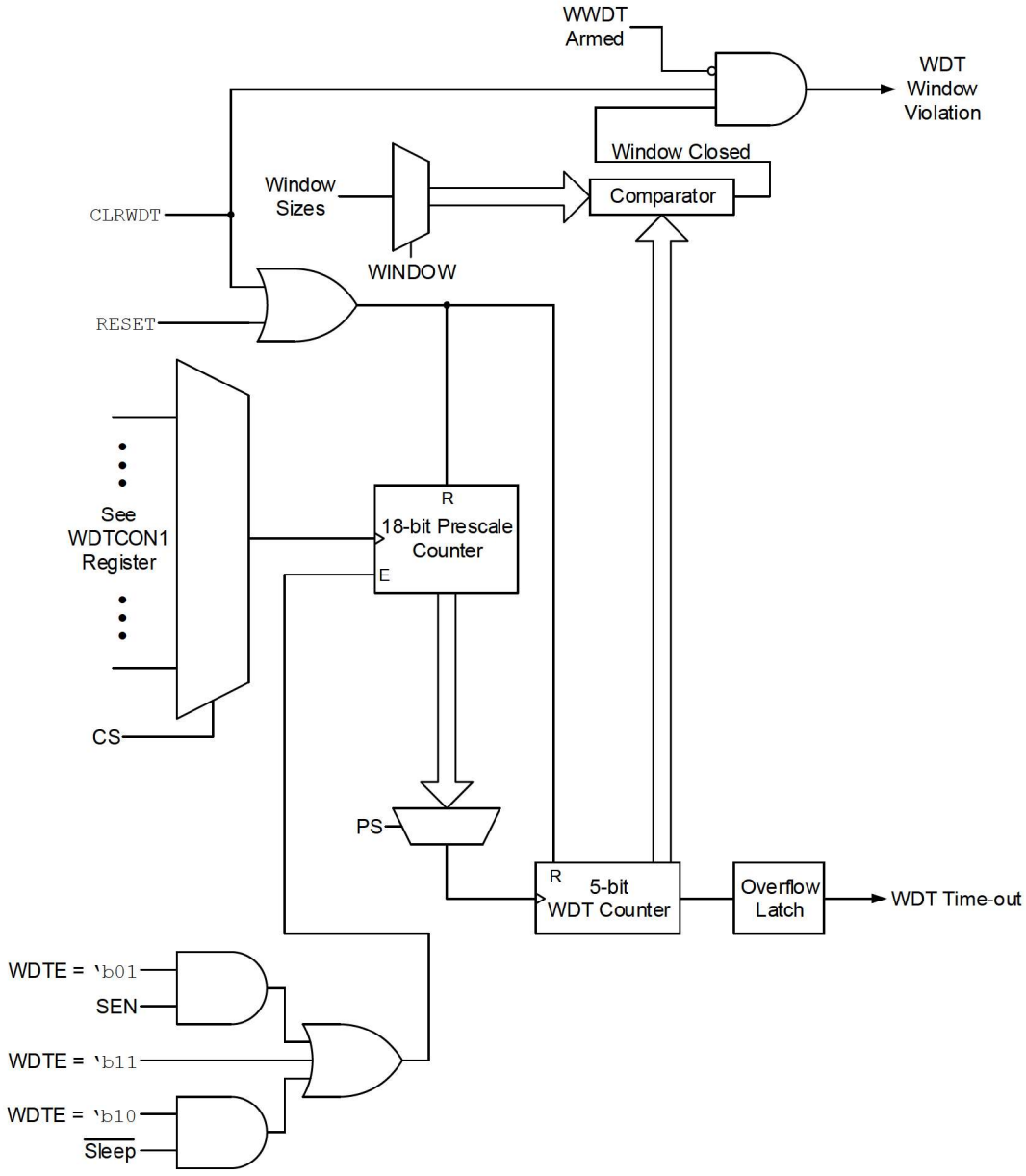

15.1 Independent Clock Source

The WWDT can derive its time base from either the 31 KHz LFINTOSC or 31.25 kHz MFINTOSC internal oscillators, depending on the value of WDT Operating Mode (WDTE) Configuration bits. If WDTE = 'b1x, then the clock source will be enabled depending on the WDTCCS Configuration bits. If WDTE = 'b01, the SEN bit should be set by software to enable WWDT, and the clock source is enabled by the CS bits. Time intervals in this chapter are based on a minimum nominal interval of 1 ms. See the device Electrical Specifications for LFINTOSC and MFINTOSC tolerances.

15.2 WWDT Operating Modes

The Windowed Watchdog Timer module has four operating modes that are controlled by the WDTE Configuration bit. The table below summarizes the different WWDT operating modes.

Table 15-1. WWDT Operating Modes

WDTE	SEN	Device Mode	WWDT Mode
11	X	X	Active
10	X	Awake	Active
		Sleep	Disabled
01	1	X	Active
	0	X	Disabled
00	X	X	Disabled

15.2.1 WWDT Is Always On

When the WDTE Configuration bits are set to 'b11, the WWDT is always on. WWDT protection is active during Sleep.

15.2.2 WWDT is Off in Sleep

When the WDTE Configuration bits are set to 'b10, the WWDT is on, except in Sleep. WWDT protection is not active during Sleep

15.2.3 WWDT Controlled by Software

hen the WDTE Configuration bits are set to 'b01, the WWDT is controlled by the SEN bit. WWDT protection is unchanged by Sleep. See Table 15-1 for more details.

15.3 Time-out Period

When the WDTCPS Configuration bits are set to the default value of 'b11111, the PS bits set the time-out period from 1 ms to 256 seconds (nominal). If any value other than the default value is assigned to the WDTCPS Configuration bits, then the timer period will be based on the WDTCPS Configuration bits. After a Reset, the default time-out period is 2s.

15.4 Watchdog Window

The Windowed Watchdog Timer has an optional Windowed mode that is controlled by either the WDTCWS Configuration bits or the WINDOW bits. In the Windowed mode (WINDOW < 'b1111), the CLRWDT instruction must occur within the allowed window of the WDT period. Any CLRWDT instruction that occurs outside of this window will trigger a window violation and will cause a WWDT Reset, similar to a WWDT time out. See Figure 15-2 for an example.

When the WDTCWS Configuration bits are 'b111 then the window size is controlled by the WINDOW bits, otherwise the window size is controlled by the WDTCWS bits. The five Most Significant bits of the WDTTMR register are used to determine whether the window is open, as defined by the window size. In the event of a window violation, a Reset will be generated and the WDTWV bit of the PCON0 register will be cleared. This bit is set by a POR and can be set by software.

Figure 15-2. Window Period and Delay

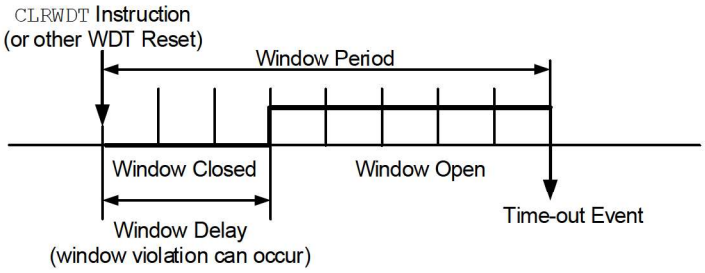

15.5 Clearing the Watchdog Timer

The Watchdog Timer is cleared when any of the following conditions occur:

- Any Reset
- A valid CLRWDT instruction is executed
- The device enters Sleep
- The devices exits Sleep by Interrupt
- The WWDT is disabled
- The Oscillator Start-up Timer (OST) is running
- Any write to the WDTCON0 or WDTCON1 registers

15.5.1 CLRWDT Considerations (Windowed Mode)

When in Windowed mode, the WWDT must be armed before a CLRWDT instruction will clear the timer. This is performed by reading the WDTCON0 register. Executing a CLRWDT instruction without performing such an arming action will trigger a window violation regardless of whether the window is open or not. See Table 15-2 for more information.

15.6 Operation During Sleep

When the device enters Sleep, the Watchdog Timer is cleared. If the WWDT is enabled during Sleep, the Watchdog Timer resumes counting. When the device exits Sleep, the Watchdog Timer is cleared again. The Watchdog Timer remains clear until the Oscillator Start-up Timer (OST) completes, if enabled. When a WWDT time-out occurs while the device is in Sleep, no Reset is generated. Instead, the device wakes up and resumes operation. The $\overline{TO}$ and $\overline{PD}$ bits in the STATUS register are changed to indicate the event. The $\overline{RWDT}$ bit in the PCON0 register indicates that a Watchdog Reset has occurred.

Table 15-2. WWDT Clearing Conditions

Conditions	WWDT
WDTE = 'b00	Cleared
WDTE = 'b01 and SEN = 0	
WDTE = 'b10 and enter Sleep	
CLRWDT Command	
Oscillator Fail Detected	
Exit Sleep + System Clock = SOSC, EXTRC, INTOSC, EXTCLK	
Exit Sleep + System Clock = XT, HS, LP	Cleared until the end of OST

.....continued	
Conditions	**WWDT**
Change INTOSC divider (IRCF bits)	Unaffected

15.7 Register Definitions: Windowed Watchdog Timer Control

Long bit name prefixes for the Reference Clock peripherals are shown in the following table. Refer to the **"Long Bit Names"** section in the **"Register and Bit Naming Conventions"** chapter for more information.

Peripheral	Bit Name Prefix
WDT	WDT

15.7.1 WDTCON0

Name: WDTCON0
Address: 0x078

Watchdog Timer Control Register 0

Bit	7	6	5	4	3	2	1	0
			PS[4:0]					SEN
Access			R/W	R/W	R/W	R/W	R/W	R/W
Reset			q	q	q	q	q	0

Bits 5:1 – PS[4:0] Watchdog Timer Prescaler Select(2)

Value	Description
11111 to 10011	Reserved. Results in minimum interval (1 ms)
10010	1:8388608 (2^{23}) (Interval 256s nominal)
10001	1:4194304 (2^{22}) (Interval 128s nominal)
10000	1:2097152 (2^{21}) (Interval 64s nominal)
01111	1:1048576 (2^{20}) (Interval 32s nominal)
01110	1:524288 (2^{19}) (Interval 16s nominal)
01101	1:262144 (2^{18}) (Interval 8s nominal)
01100	1:131072 (2^{17}) (Interval 4s nominal)
01011	1:65536 (Interval 2s nominal) (Reset value)
01010	1:32768 (Interval 1s nominal)
01001	1:16384 (Interval 512 ms nominal)
01000	1:8192 (Interval 256 ms nominal)
00111	1:4096 (Interval 128 ms nominal)
00110	1:2048 (Interval 64 ms nominal)
00101	1:1024 (Interval 32 ms nominal)
00100	1:512 (Interval 16 ms nominal)
00011	1:256 (Interval 8 ms nominal)
00010	1:128 (Interval 4 ms nominal)
00001	1:64 (Interval 2 ms nominal)
00000	1:32 (Interval 1 ms nominal)

Bit 0 – SEN Software Enable/Disable for Watchdog Timer

Value	Condition	Description
x	If WDTE = 1x	This bit is ignored
1	If WDTE = 01	WDT is turned on
0	If WDTE = 01	WDT is turned off
x	If WDTE = 00	This bit is ignored

Notes:

1. When the WDTCPS Configuration bits = 'b11111, the Reset value (q) of WDTPS is 'b01011. Otherwise, the Reset value of WDTPS is equal to the WDTCPS in Configuration bits.
2. When the WDTCPS in Configuration bits ≠ 'b11111, these bits are read-only.

15.7.2 WDTCON1

Name: WDTCON1
Address: 0x079

Watchdog Timer Control Register 1

Bit	7	6	5	4	3	2	1	0
		CS[2:0]				WINDOW[2:0]		
Access		R/W	R/W	R/W		R/W	R/W	R/W
Reset		q	q	q		q	q	q

Bits 6:4 – CS[2:0] Watchdog Timer Clock Select(1,3)

CS	Clock Source
111-100	Reserved
011	EXTOSC
010	SOSC
001	MFINTOSC (31.25 kHz)
000	LFINTOSC (31 kHz)

Bits 2:0 – WINDOW[2:0] Watchdog Timer Window Select(2,4)

WINDOW	Window Delay Percent of Time	Window Opening Percent of Time
111	N/A	100
110	12.5	87.5
101	25	75
100	37.5	62.5
011	50	50
010	62.5	37.5
001	75	25
000	87.5	12.5

Notes:

1. When the WDTCCS in Configuration bits = 'b111, the Reset value of WDTCS is 'b000.
2. The Reset value (q) of WINDOW is determined by the value of WDTCWS in the Configuration bits.
3. When the WDTCCS in Configuration bits ≠ 'b111, these bits are read-only.
4. When the WDTCWS in Configuration bits ≠ 'b111, these bits are read-only.

15.7.3 WDTPSH

Name: WDTPSH
Address: 0x07B

WWDT Prescaler Select Register (Read-Only)

Bit	7	6	5	4	3	2	1	0
	PSCNTH[7:0]							
Access	R	R	R	R	R	R	R	R
Reset	0	0	0	0	0	0	0	0

Bits 7:0 – PSCNTH[7:0] Prescaler Select High Byte[(1)]

Note:

1. The 18-bit WDT prescaler value, PSCNT[17:0] includes the WDTPSL, WDTPSH and the lower bits of the WDTTMR registers. PSCNT[17:0] is intended for debug operations and should be read during normal operation.

15.7.4 WDTPSL

Name: WDTPSL
Address: 0x07A

WWDT Prescaler Select Register (Read-Only)

Bit	7	6	5	4	3	2	1	0
	PSCNTL[7:0]							
Access	R	R	R	R	R	R	R	R
Reset	0	0	0	0	0	0	0	0

Bits 7:0 – PSCNTL[7:0] Prescaler Select Low Byte(1)

Note:

1. The 18-bit WDT prescaler value, PSCNT[17:0] includes the WDTPSL, WDTPSH and the lower bits of the WDTTMR registers. PSCNT[17:0] is intended for debug operations and should be read during normal operation.

15.7.5 WDTTMR

Name: WDTTMR
Address: 0x07C

WDT Timer Register (Read-Only)

Bit	7	6	5	4	3	2	1	0
	TMR[4:0]					STATE	PSCNT[17:16]	
Access	R	R	R	R	R	R	R	R
Reset	0	0	0	0	0	0	0	0

Bits 7:3 – TMR[4:0] Watchdog Window Value

WINDOW	WDT Window State		Open Percent
	Closed	Open	
111	N/A	00000-11111	100
110	00000-00011	00100-11111	87.5
101	00000-00111	01000-11111	75
100	00000-01011	01100-11111	62.5
011	00000-01111	10000-11111	50
010	00000-10011	10100-11111	37.5
001	00000-10111	11000-11111	25
000	00000-11011	11100-11111	12.5

Bit 2 – STATE WDT Armed Status

Value	Description
1	WDT is armed
0	WDT is not armed

Bits 1:0 – PSCNT[17:16] Prescaler Select Upper Byte(1)

Note:

1. The 18-bit WDT prescaler value, PSCNT[17:0] includes the WDTPSL, WDTPSH and the lower bits of the WDTTMR registers. PSCNT[17:0] is intended for debug operations and should not be read during normal operation.

15.8 Register Summary: WDT Control

Address	Name	Bit Pos.	7	6	5	4	3	2	1	0
0x00 ... 0x77	Reserved									
0x78	WDTCON0	7:0			PS[4:0]					SEN
0x79	WDTCON1	7:0		CS[2:0]				WINDOW[2:0]		
0x7A	WDTPSL	7:0	PSCNTL[7:0]							
0x7B	WDTPSH	7:0	PSCNTH[7:0]							
0x7C	WDTTMR	7:0	TMR[4:0]					STATE	PSCNT[17:16]	

16. DMA - Direct Memory Access

The Direct Memory Access (DMA) module is designed to service data transfers between different memory regions directly, without intervention from the CPU. By eliminating the need for CPU-intensive management of handling interrupts intended for data transfers, the CPU now can spend more time on other tasks.

The DMA modules can be independently programmed to transfer data between different memory locations, move different data sizes, and use a wide range of hardware triggers to initiate transfers. The DMA modules can even be programmed to work together, in order to carry out more complex data transfers without CPU overhead.

Key features of the DMA module include:

- Support access to the following memory regions:
  - GPR and SFR space (R/W)
  - Program Flash memory (R only)
  - Data EEPROM memory (R only)
- Programmable priority between the DMA and CPU operations. Refer to the **"System Arbitration"** section in the **"PIC18 CPU"** chapter for details.
- Programmable Source and Destination Address modes:
  - Fixed address
  - Post-increment address
  - Post-decrement address
- Programmable source and destination sizes
- Source and Destination Pointer register, dynamically updated and reloadable
- Source and Destination Count register, dynamically updated and reloadable
- Programmable auto-stop based on source or destination counter
- Software triggered transfers
- Multiple user-selectable sources for hardware triggered transfers
- Multiple user-selectable sources for aborting DMA transfers

16.1 DMA Registers

The operation of the DMA module is controlled by the following registers:

- DMA Instance Selection register (DMASELECT)
- Control registers (DMAnCON0, DMAnCON1)
- Data Buffer register (DMAnBUF)
- Source Start Address register (DMAnSSA)
- Source Pointer register (DMAnSPTR)
- Source Message Size register (DMAnSSZ)
- Source Count register (DMAnSCNT)
- Destination Start Address register (DMAnDSA)
- Destination Pointer register (DMAnDPTR)
- Destination Message Size register (DMAnDSZ)
- Destination Count register (DMAnDCNT)
- Start Interrupt Request Source register (DMAnSIRQ)
- Abort Interrupt Request Source register (DMAnAIRQ)

The registers are detailed in Register Definitions: DMA.

16.2 DMA Organization

The DMA module is designed to move data by using the existing instruction bus and data bus without the need for any dual-porting of memory or peripheral systems (Figure 16-1). The DMA accesses the required bus when granted by the system arbiter.

Figure 16-1. DMA Functional Block Diagram

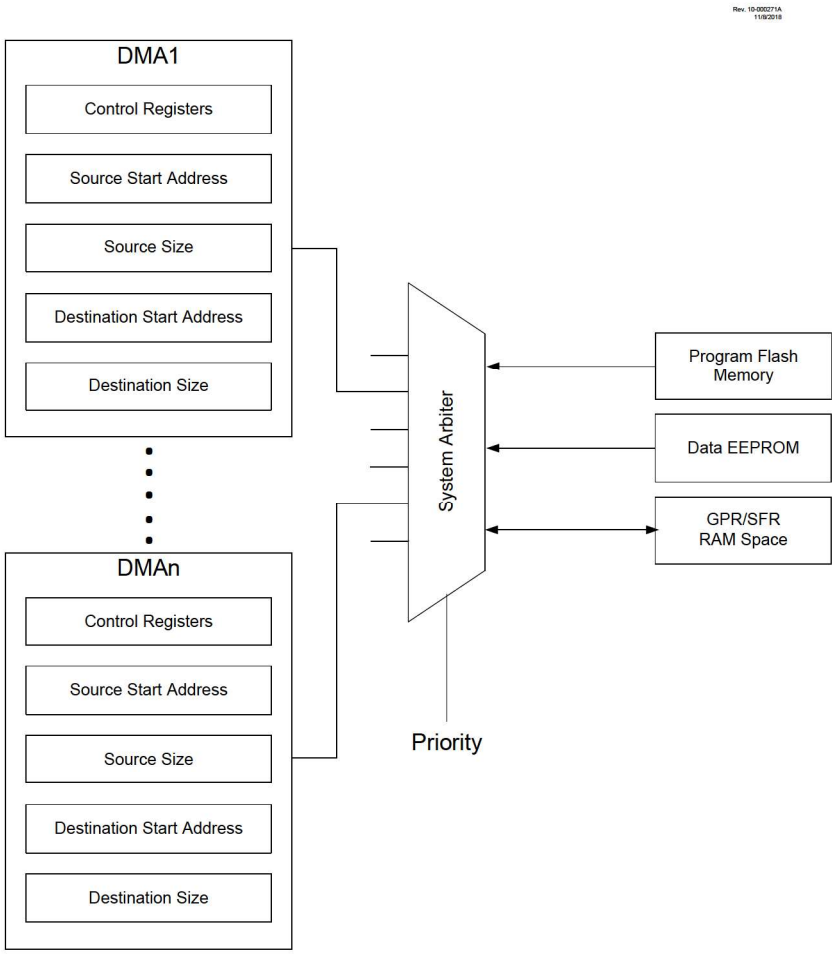

Depending on the priority of the DMA with respect to CPU execution (Refer to section **"Memory Access Scheme"** in the **"PIC18 CPU"** chapter for more information), the DMA Controller can move data through two methods:

- Stalling the CPU execution until it has completed its transfers (DMA has higher priority over the CPU in this mode of operation).
- Utilizing unused CPU cycles for DMA transfers (CPU has higher priority over the DMA in this mode of operation). Unused CPU cycles are referred to as bubbles, which are instruction cycles available for use by the DMA to perform read and write operations. In this way, the effective bandwidth for handling data is increased; at the same time, DMA operations can proceed without causing a processor stall.

16.3 DMA Interface

The DMA module transfers data from the source to the destination one byte at a time, this smallest data movement is called a DMA data transaction. A DMA message refers to one or more DMA data transactions.

Each DMA data transaction consists of two separate actions:

- Reading the source address memory and storing the value in the DMA Buffer register
- Writing the contents of the DMA Buffer register to the destination address memory

Important: DMA data movement is a two-cycle operation.

The XIP bit is a Status bit to indicate whether or not the data in the DMAnBUF register has been written to the destination address. If the bit is set, then data is waiting to be written to the destination. If clear, it means that either data has been written to the destination or that no source read has occurred.

The DMA has read access to PFM, Data EEPROM, and SFR/GPR space, and write access to SFR/GPR space. Based on these memory access capabilities, the DMA can support the following memory transactions:

Table 16-1. DMA MEMORY ACCESS

Read Source	Write Destination
Program Flash Memory	GPR
Program Flash Memory	SFR
Data EE	GPR
Data EE	SFR
GPR	GPR
GPR	SFR
SFR	GPR
SFR	SFR

Important: Even though the DMA module has access to all memory and peripherals that are also available to the CPU, it is recommended that the DMA does not access any register that is part of the system arbitration. The DMA, as a system arbitration client should not be read or written by itself or by another DMA instantiation.

The following sections discuss the various control interfaces required for DMA data transfers.

16.3.1 Special Function Registers with DMA Access only

The DMA can transfer data to any GPR or SFR location. For better user accessibility, some of the more commonly used SFR spaces have their mirror registers placed in a separate data memory location. These mirror registers can be only accessed by the DMA module through the DMA Source and Destination Address registers. The figure below shows the register map for these registers.

These registers are useful to multiple peripherals together like the Timers, PWMs and also other DMA modules using one of the DMA modules.

Figure 16-2. Special Function Register Map (DMA Access Only)

40FFh	-	40DFh	-	40BFh	-	409Fh	-	407Fh	CX1_ADPREH_M1	405Fh	-	403Fh	-	401Fh	-
40FEh	-	40DEh	-	40BEh	-	409Eh	-	407Eh	CX1_ADPREL_M1	405Eh	-	403Eh	-	401Eh	-
40FDh	-	40DDh	-	40BDh	-	409Dh	-	407Dh	CX1_ADRESH_M1	405Dh	-	403Dh	-	401Dh	-
40FCh	-	40DCh	-	40BCh	-	409Ch	-	407Ch	CX1_ADRESL_M1	405Ch	-	403Ch	-	401Ch	-
40FBh	-	40DBh	-	40BBh	-	409Bh	-	407Bh	CX1_ADPCH_M1	405Bh	-	403Bh	-	401Bh	PWM3S1P2H_M1
40FAh	-	40DAh	-	40BAh	-	409Ah	-	407Ah	CX1_ADCLK_M1	405Ah	-	403Ah	-	401Ah	PWM3S1P2L_M1
40F9h	-	40D9h	-	40B9h	-	4099h	-	4079h	CX1_ADACT_M1	4059h	-	4039h	-	4019h	PWM3S1P1H_M2
40F8h	ADPREH_M1	40D8h	-	40B8h	-	4098h	-	4078h	CX1_ADREF_M1	4058h	-	4038h	-	4018h	PWM3S1P1L_M2
40F7h	ADPREL_M1	40D7h	-	40B7h	-	4097h	-	4077h	CX1_ADCON3_M1	4057h	-	4037h	-	4017h	PWM2S1P2H_M1
40F6h	ADRESH_M1	40D6h	-	40B6h	-	4096h	-	4076h	CX1_ADCON2_M1	4056h	-	4036h	-	4016h	PWM2S1P2L_M1
40F5h	ADRESL_M1	40D5h	-	40B5h	-	4095h	-	4075h	CX1_ADCON1_M1	4055h	-	4035h	-	4015h	PWM2S1P1H_M2
40F4h	ADPCH_M1	40D4h	-	40B4h	-	4094h	-	4074h	CX1_ADCON0_M1	4054h	-	4034h	-	4014h	PWM2S1P1L_M2
40F3h	ADCAP_M1	40D3h	-	40B3h	-	4093h	-	4073h	CX1_ADCAP_M1	4053h	-	4033h	-	4013h	PWM1S1P2H_M1
40F2h	ADACQH_M1	40D2h	-	40B2h	-	4092h	-	4072h	CX1_ADACQH_M1	4052h	-	4032h	-	4012h	PWM1S1P2L_M1
40F1h	ADACQL_M1	40D1h	-	40B1h	-	4091h	-	4071h	CX1_ADACQL_M1	4051h	-	4031h	PWM3PRH_M1	4011h	PWM1S1P1H_M2
40F0h	ADPREVH_M1	40D0h	-	40B0h	-	4090h	-	4070h	CX1_ADPREVH_M1	4050h	-	4030h	PWM3PRL_M1	4010h	PWM1S1P1L_M2
40EFh	ADPREVL_M1	40CFh	-	40AFh	-	408Fh	-	406Fh	CX1_ADPREVL_M1	404Fh	-	402Fh	PWM3S1P2H_M2	400Fh	-
40EEh	ADRPT_M1	40CEh	-	40AEh	-	408Eh	-	406Eh	CX1_ADRPT_M1	404Eh	-	402Eh	PWM3S1P2L_M2	400Eh	-
40EDh	ADCNT_M1	40CDh	-	40ADh	-	408Dh	-	406Dh	CX1_ADCNT_M1	404Dh	-	402Dh	PWM3S1P1H_M3	400Dh	-
40ECh	ADACCU_M1	40CCh	-	40ACh	-	408Ch	-	406Ch	CX1_ADACCU_M1	404Ch	-	402Ch	PWM3S1P1L_M3	400Ch	-
40CBh	ADACCH_M1	40CBh	-	40ABh	-	408Bh	-	406Bh	CX1_ADACCH_M1	404Bh	-	402Bh	PWM2PRH_M1	400Bh	PWM3S1P1H_M1
40EAh	ADACCL_M1	40CAh	-	40AAh	-	408Ah	-	406Ah	CX1_ADACCL_M1	404Ah	-	402Ah	PWM2PRL_M1	400Ah	PWM3S1P1L_M1
40E9h	ADFLTRH_M1	40C9h	-	40A9h	-	4089h	-	4069h	CX1_ADFLTRH_M1	4049h	-	4029h	PWM2S1P2H_M2	4009h	PWM2S1P1H_M1
40E8h	ADFLTRL_M1	40C8h	-	40A8h	-	4088h	-	4068h	CX1_ADFLTRL_M1	4048h	-	4028h	PWM2S1P2L_M2	4008h	PWM2S1P1L_M1
40E7h	ADSTPTH_M1	40C7h	-	40A7h	-	4087h	-	4067h	CX1_ADSTPTH_M1	4047h	-	4027h	PWM2S1P1H_M3	4007h	PWM1S1P1H_M1
40E6h	ADSTPTL_M1	40C6h	-	40A6h	-	4086h	-	4066h	CX1_ADSTPTL_M1	4046h	-	4026h	PWM2S1P1L_M3	4006h	PWM1S1P1L_M1
40E5h	ADERRH_M1	40C5h	-	40A5h	-	4085h	-	4065h	CX1_ADERRH_M1	4045h	T4PR_M1	4025h	PWM1PRH_M1	4005h	-
40E4h	ADERRL_M1	40C4h	-	40A4h	-	4084h	-	4064h	CX1_ADERRL_M1	4044h	-	4024h	PWM1PRL_M1	4004h	-
40E3h	ADUTHH_M1	40C3h	-	40A3h	-	4083h	-	4063h	CX1_ADUTHH_M1	4043h	-	4023h	PWM1S1P2H_M2	4003h	-
40E2h	ADUTHL_M1	40C2h	-	40A2h	-	4082h	-	4062h	CX1_ADUTHL_M1	4042h	T2PR_M1	4022h	PWM1S1P2L_M2	4002h	-
40E1h	ADLTHH_M1	40C1h	-	40A1h	-	4081h	-	4061h	CX1_ADLTHH_M1	4041h	CCPR1H_M2	4021h	PWM1S1P1H_M3	4001h	CCPR1H_M1
40E0h	ADLTHL_M1	40C0h	-	40A0h	-	4080h	-	4060h	CX1_ADLTHL_M1	4040h	CCPR1L_M2	4020h	PWM1S1P1L_M3	4000h	CCPR1L_M1

41FFh	-	41DFh	-	41BFh	-	419Fh	-	417Fh	-	415Fh	-	413Fh	DMAnSSAH_DMA3	411Fh	DMAnDSAH_DMA2
41FEh	-	41DEh	-	41BEh	-	419Eh	-	417Eh	-	415Eh	-	413Eh	DMAnSSAL_DMA3	411Eh	DMAnDSAL_DMA2
41FDh	-	41DDh	-	41BDh	-	419Dh	-	417Dh	-	415Dh	-	413Dh	DMAnSSZH_DMA3	411Dh	DMAnDSZH_DMA2
41FCh	-	41DCh	-	41BCh	-	419Ch	-	417Ch	-	415Ch	-	413Ch	DMAnSSZL_DMA3	411Ch	DMAnDSZL_DMA2
41FBh	-	41DBh	-	41BBh	-	419Bh	-	417Bh	-	415Bh	DMAnSIRQ_DMA4	413Bh	DMAnSPTRU_DMA3	411Bh	DMAnDPTRH_DMA2
41FAh	-	41DAh	-	41BAh	-	419Ah	-	417Ah	-	415Ah	DMAnAIRQ_DMA4	413Ah	DMAnSPTRH_DMA3	411Ah	DMAnDPTRL_DMA2
41F9h	TMR3H_M1	41D9h	-	41B9h	-	4199h	-	4179h	-	4159h	DMAnCON1_DMA4	4139h	DMAnSPTRL_DMA3	4119h	DMAnDCNTH_DMA2
41F8h	TMR3L_M1	41D8h	-	41B8h	-	4198h	-	4178h	-	4158h	DMAnCON0_DMA4	4138h	DMAnSCNTH_DMA3	4118h	DMAnDCNTL_DMA2
41F7h	TMR1H_M1	41D7h	-	41B7h	-	4197h	-	4177h	-	4157h	DMAnSSAU_DMA4	4137h	DMAnSCNTL_DMA3	4117h	DMAnBUF_DMA2
41F6h	TMR1L_M1	41D6h	-	41B6h	-	4196h	-	4176h	-	4156h	DMAnSSAH_DMA4	4136h	DMAnDSAH_DMA3	4116h	DMAnSIRQ_DMA1
41F5h	-	41D5h	-	41B5h	-	4195h	-	4175h	-	4155h	DMAnSSAL_DMA4	4135h	DMAnDSAL_DMA3	4115h	DMAnAIRQ_DMA1
41F4h	-	41D4h	-	41B4h	-	4194h	-	4174h	-	4154h	DMAnSSZH_DMA4	4134h	DMAnDSZH_DMA3	4114h	DMAnCON1_DMA1
41F3h	-	41D3h	-	41B3h	-	4193h	-	4173h	-	4153h	DMAnSSZL_DMA4	4133h	DMAnDSZL_DMA3	4113h	DMAnCON0_DMA1
41F2h	-	41D2h	-	41B2h	-	4192h	-	4172h	-	4152h	DMAnSPTRU_DMA4	4132h	DMAnDPTRH_DMA3	4112h	DMAnSSAU_DMA1
41F1h	-	41D1h	-	41B1h	-	4191h	-	4171h	-	4151h	DMAnSPTRH_DMA4	4131h	DMAnDPTRL_DMA3	4111h	DMAnSSAH_DMA1
41F0h	-	41D0h	-	41B0h	-	4190h	-	4170h	-	4150h	DMAnSPTRL_DMA4	4130h	DMAnDCNTH_DMA3	4110h	DMAnSSAL_DMA1
41EFh	-	41CFh	-	41AFh	-	418Fh	-	416Fh	-	414Fh	DMAnSCNTH_DMA4	412Fh	DMAnDCNTL_DMA3	410Fh	DMAnSSZH_DMA1
41EEh	-	41CEh	-	41AEh	-	418Eh	-	416Eh	-	414Eh	DMAnSCNTL_DMA4	412Eh	DMAnBUF_DMA3	410Eh	DMAnSSZL_DMA1
41EDh	-	41CDh	-	41ADh	-	418Dh	-	416Dh	-	414Dh	DMAnDSAH_DMA4	412Dh	DMAnSIRQ_DMA2	410Dh	DMAnSPTRU_DMA1
41ECh	-	41CCh	-	41ACh	-	418Ch	-	416Ch	-	414Ch	DMAnDSAL_DMA4	412Ch	DMAnAIRQ_DMA2	410Ch	DMAnSPTRH_DMA1
41CBh	-	41CBh	-	41ABh	-	418Bh	-	416Bh	-	414Bh	DMAnDSZH_DMA4	412Bh	DMAnCON1_DMA2	410Bh	DMAnSPTRL_DMA1
41EAh	-	41CAh	-	41AAh	-	418Ah	-	416Ah	-	414Ah	DMAnDSZL_DMA4	412Ah	DMAnCON0_DMA2	410Ah	DMAnSCNTH_DMA1
41E9h	-	41C9h	-	41A9h	-	4189h	-	4169h	-	4149h	DMAnDPTRH_DMA4	4129h	DMAnSSAU_DMA2	4109h	DMAnSCNTL_DMA1
41E8h	-	41C8h	-	41A8h	-	4188h	-	4168h	-	4148h	DMAnDPTRL_DMA4	4128h	DMAnSSAH_DMA2	4108h	DMAnDSAH_DMA1
41E7h	-	41C7h	-	41A7h	-	4187h	-	4167h	-	4147h	DMAnDCNTH_DMA4	4127h	DMAnSSAL_DMA2	4107h	DMAnDSAL_DMA1
41E6h	-	41C6h	-	41A6h	-	4186h	-	4166h	-	4146h	DMAnDCNTL_DMA4	4126h	DMAnSSZH_DMA2	4106h	DMAnDSZH_DMA1
41E5h	-	41C5h	-	41A5h	-	4185h	-	4165h	-	4145h	DMAnBUF_DMA4	4125h	DMAnSSZL_DMA2	4105h	DMAnDSZL_DMA1
41E4h	-	41C4h	-	41A4h	-	4184h	-	4164h	-	4144h	DMAnSIRQ_DMA3	4124h	DMAnSPTRU_DMA2	4104h	DMAnDPTRH_DMA1
41E3h	-	41C3h	-	41A3h	-	4183h	-	4163h	-	4143h	DMAnAIRQ_DMA3	4123h	DMAnSPTRH_DMA2	4103h	DMAnDPTRL_DMA1
41E2h	IOCCF_M1	41C2h	-	41A2h	-	4182h	-	4162h	-	4142h	DMAnCON1_DMA3	4122h	DMAnSPTRL_DMA2	4102h	DMAnDCNTH_DMA1
41E1h	IOCBF_M1	41C1h	-	41A1h	-	4181h	-	4161h	-	4141h	DMAnCON0_DMA3	4121h	DMAnSCNTH_DMA2	4101h	DMAnDCNTL_DMA1
41E0h	IOCAF_M1	41C0h	-	41A0h	-	4180h	-	4160h	-	4140h	DMAnSSAU_DMA3	4120h	DMAnSCNTL_DMA2	4100h	DMAnBUF_DMA1

16.3.2 DMA Addressing

The start addresses for the source read and destination write operations are set using the DMAnSSA and DMAnDSA registers, respectively.

When the DMA message transfers are in progress, the DMAnSPTR and DMAnDPTR registers contain the current Address Pointers for each source read and destination write operation. These registers are modified after each transaction based on the Address mode selection bits.

The SMODE and DMODE bits determine the address modes of operation by controlling how the DMAnSPTR and DMAnDPTR registers are updated after every DMA data transaction (Figure 16-3).

Each address can be separately configured to:

- Remain unchanged
- Increment by 1
- Decrement by 1

Figure 16-3. DMA Pointers Block Diagram

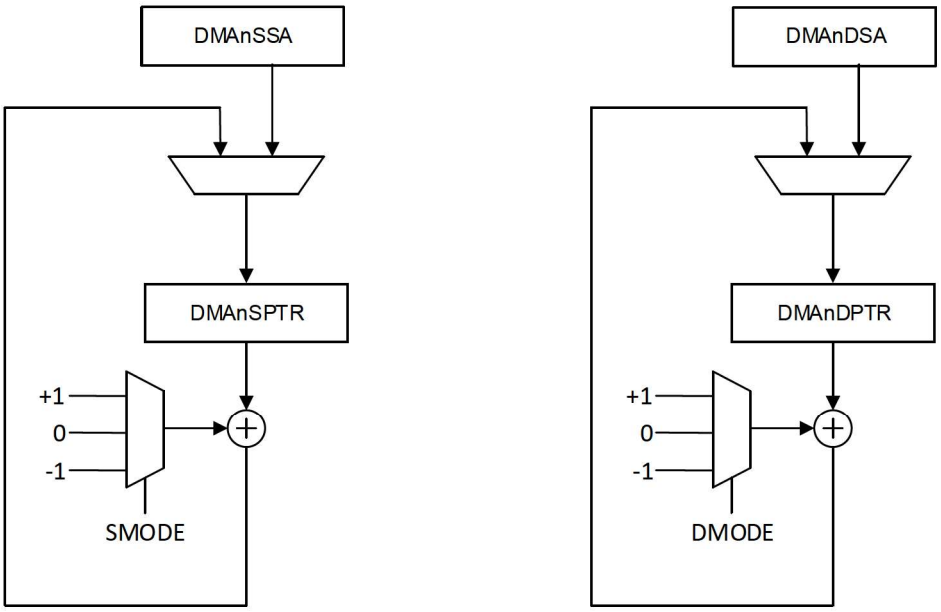

The DMA can initiate data transfers from the PFM, Data EEPROM or SFR/GPR space. The SMR bits are used to select the type of memory being pointed to by the Source Address Pointer. The SMR bits are required because the PFM and SFR/GPR spaces have overlapping addresses that do not allow the specified address to uniquely define the memory location to be accessed.

Important:

1. For proper memory read access to occur, the combination of address and space selection must be valid.
2. The destination does not have space selection bits because it can only write to the SFR/GPR space.

16.3.3 DMA Message Size/Counters

A transaction is the transfer of one byte. A message consists of one or more transactions. A complete DMA process consists of one or more messages. The size registers determine how many transactions are in a message. The DMAnSSZ registers determine the source size and DMAnDSZ registers determine the destination size.

When a DMA transfer is initiated, the size registers are copied to corresponding counter registers that control the duration of the message. The DMAnSCNT registers count the source transactions and the DMAnDCNT registers count the destination transactions. Both are simultaneously decremented by one after each transaction.

A message is started by setting the DGO bit and terminates when the smaller of the two counters reaches zero.

When either counter reaches zero, the DGO bit is cleared and the counter and pointer registers are immediately reloaded with the corresponding size and address data. If the other counter did not reach zero, then the next message will continue with the count and address corresponding to that register. Refer to Figure 16-4.

When the Source and Destination Size registers are not equal, then the ratio of the largest to the smallest size determines how many messages are in the DMA process. For example, when the destination size is six and the source size is two, then each message will consist of two transactions and the complete DMA process will consist of three messages. When the larger size is not an even integer of the smaller size, then the last message in the process will terminate early when the larger count reaches zero. In that case, the larger counter will reset and the smaller counter will have a remainder skewing any subsequent messages by that amount.

Table 16-2 has a few examples of configuring DMA Message sizes.

Important: Reading the DMAnSCNT or DMAnDCNT registers will never return zero. When either register is decremented from '1', it is immediately reloaded from the corresponding size register.

Table 16-2. EXAMPLE MESSAGE SIZE TABLE

Operation	Example	SCNT	DCNT	Comments
Read from single SFR location to RAM	UART Receive Buffer	1	N	N equals the number of bytes desired in the destination buffer. N≥1.
Write to single SFR location from RAM	UART Transmit Buffer	N	1	N equals the number of bytes desired in the source buffer. N≥1.
Read from multiple SFR location	ADC Result registers	2	2*N	N equals the number of ADC results to be stored in memory. N≥1
Write to Multiple SFR registers	PWM Duty Cycle registers	2*N	2	N equals the number of PWM duty cycle values to be loaded from a memory table. N≥1

Figure 16-4. DMA COUNTERS BLOCK DIAGRAM

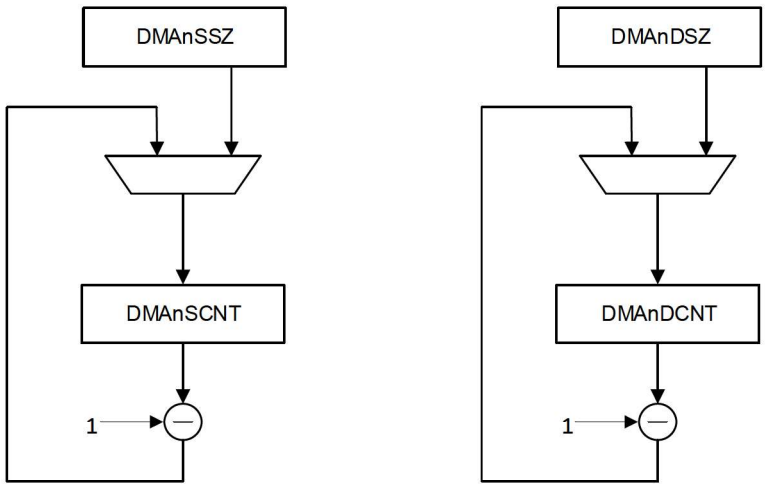

16.3.4 DMA Message Transfers

Once the Enable bit is set to start DMA message transfers, the Source/Destination Pointer and Counter registers are initialized to the conditions shown in the table below.

Table 16-3. DMA INITIAL CONDITIONS

Register	Value Loaded
DMAnSPTR	DMAnSSA
DMAnSCNT	DMAnSSZ
DMAnDPTR	DMAnDSA
DMAnDCNT	DMAnDSZ

During the DMA operation after each transaction, Table 16-4 and Table 16-5 indicate how the Source/ Destination Pointer and Counter registers are modified.

The following sections discuss how to initiate and terminate DMA transfers.

Table 16-4. DMA SOURCE POINTER/COUNTER DURING OPERATION

Register	Modified Source Counter/Pointer Value
DMAnSCNT != 1	DMAnSCNT = DMAnSCNT -1
	SMODE = 00: DMAnSPTR = DMAnSPTR
	SMODE = 01: DMAnSPTR = DMAnSPTR + 1
	SMODE = 10: DMAnSPTR = DMAnSPTR - 1
DMAnSCNT == 1	DMAnSCNT = DMAnSSZ
	DMAnSPTR = DMAnSSA

Table 16-5. DMA DESTINATION POINTER/COUNTER DURING OPERATION

Register	Modified Destination Counter/Pointer Value
DMAnDCNT != 1	DMAnDCNT = DMAnDCNT -1
	DMODE = 00: DMAnDPTR = DMAnDPTR
	DMODE = 01: DMAnDPTR = DMAnDPTR + 1
	DMODE = 10: DMAnDPTR = DMAnDPTR - 1
DMAnDCNT == 1	DMAnDCNT = DMAnDSZ
	DMAnDPTR = DMAnDSA

16.3.4.1 Starting DMA Message Transfers

The DMA can initiate data transactions by either of the following two conditions:

- User software control
- Hardware trigger, SIRQ

16.3.4.1.1 User Software Control

Software starts or stops DMA transaction by setting/clearing the DGO bit. The DGO bit is also used to indicate whether a DMA hardware trigger has been received and a message is in progress.

Important:

1. Software start can only occur when the EN bit is set.
2. If the CPU writes to the DGO bit while it is already set, there is no effect on the system, the DMA will continue to operate normally.

16.3.4.1.2 Hardware Trigger, SIRQ

A hardware trigger is an interrupt request from another module sent to the DMA with the purpose of starting a DMA message. The DMA start trigger source is user-selectable using the DMAnSIRQ register.

The SIRQEN bit is used to enable sampling of external interrupt triggers by which a DMA transfer can be started. When set, the DMA will sample the selected interrupt source and when cleared, the DMA will ignore the interrupt source. Clearing the SIRQEN bit does not stop a DMA transaction currently in progress, it only stops more hardware request signals from being received.

16.3.4.2 Stopping DMA Message Transfers

The DMA controller can stop data transactions by any of the following conditions:

- Clearing the DGO bit
- Hardware abort trigger, AIRQ
- Source count reload
- Destination count reload
- Clearing the EN bit

16.3.4.2.1 User Software Control

If the user clears the DGO bit, the message will be stopped and the DMA will remain in the current configuration.

For example, if the user clears the DGO bit after source data has been read, but before it is written to the destination, then the data in the DMAnBUF register will not reach its destination.

This is also referred to as a soft-stop as the operation can resume, if desired, by setting the DGO bit again.

16.3.4.2.2 Hardware Trigger, AIRQ

The AIRQEN bit is used to enable sampling of external interrupt triggers by which a DMA transaction can be aborted.

Once an abort interrupt request has been received, the DMA will perform a soft-stop by clearing the DGO bit, as well as clearing the SIRQEN bit so overruns do not occur. The AIRQEN bit is also cleared to prevent additional abort signals from triggering false aborts.

If desired, the DGO bit can be set again and the DMA will resume operation from where it left off after the soft stop had occurred, as none of the DMA state information is changed in the event of an abort.

16.3.4.2.3 Source Count Reload

A DMA message is considered to be complete when the Source Count register is decremented from 1 and then reloaded (i.e., once the last byte from either the source read or destination write has occurred). When the SSTP bit is set and the Source Count register is reloaded, then further message transfer is stopped.

16.3.4.2.4 Destination Count Reload

A DMA message is considered to be complete when the Destination Count register is decremented from 1 and then reloaded (i.e., once the last byte from either the source read or destination write has occurred). When the DSTP bit is set and the Destination Count register is reloaded then further message transfer is stopped.

Important: Reading the DMAnSCNT or DMAnDCNT registers will never return zero. When either register is decremented from '1', it is immediately reloaded from the corresponding size register.

16.3.4.2.5 Clearing the EN bit

If the user clears the EN bit, the message will be stopped and the DMA will return to its default configuration. This is also referred to as a hard stop, as the DMA cannot resume operation from where it was stopped.

Important: After the DMA message transfer is stopped, it requires an extra instruction cycle before the Stop condition takes effect. Thus, after the Stop condition has occurred, a source read or a destination write can occur depending on the source or destination bus availability.

16.4 Disable DMA Message Transfer Upon Completion

Once the DMA message is complete, it may be desirable to disable the trigger source to prevent overrun or under run of data. This can be done by any of the following methods:

- Clearing the SIRQEN bit
- Setting the SSTP bit
- Setting the DSTP bit

16.4.1 Clearing the SIRQEN bit

Clearing the SIRQEN bit stops the sampling of external start interrupt triggers, hence preventing further DMA message transfers.

An example would be a communications peripheral with a level-triggered interrupt. The peripheral will continue to request data (because its buffer is empty) even though there is no more data to be moved. Disabling the SIRQEN bit prevents the DMA from processing these requests.

16.4.2 Source/Destination Stop

The SSTP and DSTP bits determine whether or not to disable the hardware triggers (SIRQEN = 0), once a DMA message has completed.

When the SSTP bit is set and the DMAnSCNT = 0, then the SIRQEN bit will be cleared. Similarly, when the DSTP bit is set and the DMAnDCNT = 0, the SIRQEN bit will be cleared.

Important: The SSTP and DSTP bits are independent functions and do not depend on each other. It is possible for a message to be stopped by either counter at message end or both counters at message end.

16.5 Types of Hardware Triggers

The DMA has two different trigger inputs, the source trigger and the abort trigger. Each of these trigger sources is user configurable using the DMAnSIRQ and DMAnAIRQ registers.

Based on the source selected for each trigger, there are two types of requests that can be sent to the DMA:

- Edge triggers
- Level triggers

16.5.1 Edge Trigger Requests

An edge request occurs only once when a given module interrupt requirements are true. Examples of edge triggers are the ADC conversion complete and the interrupt-on-change interrupts.

16.5.2 Level Trigger Requests

A level request is asserted as long as the condition that causes the interrupt is true. Examples of level triggers are the UART receive and transmit interrupts.

16.6 Types of Data Transfers

Based on the memory access capabilities of the DMA (see Table 16-1), the following sections discuss the different types of data movement between the source and destination memory regions.

- N:1
  This type of transfer is common when sending predefined data packets (such as strings) through a single interface point (such as communications modules transmit registers).
- N:N

This type of transfer is useful for moving information out of the program Flash or Data EEPROM to SRAM for manipulation by the CPU or other peripherals.

- 1:1
  This type of transfer is common when bridging two different modules data streams together (communications bridge).
- 1:N
  This type of transfer is useful for moving information from a single data source into a memory buffer (communications receive registers).

16.7 DMA Interrupts

Each DMA has its own set of four interrupt flags, used to indicate a range of conditions during data transfers. The interrupt flag bits can be accessed using the corresponding PIR registers (refer to the **"VIC - Vectored Interrupt Controller"** chapter).

16.7.1 DMA Source Count Interrupt

The Source Count Interrupt flag (DMAxSCNTIF) is set every time the DMAnSCNT register reaches zero and is reloaded to its starting value.

16.7.2 DMA Destination Count Interrupt

The Destination Count Interrupt flag (DMAxDCNTIF) is set every time the DMAnDCNT register reaches zero and is reloaded to its starting value.

The DMA source and destination count interrupts signal the CPU when the DMA messages are completed.

16.7.3 Abort Interrupt

The Abort Interrupt Flag (DMAxAIF) is used to signal that the DMA has halted activity due to an abort signal from one of the abort sources. This is used to indicate that the transaction has been halted by a hardware event.

16.7.4 Overrun Interrupt

When the DMA receives a trigger to start a new message before the current message is completed, then the Overrun Interrupt Flag (DMAxORIF) bit is set.

This condition indicates that the DMA is being requested before its current transaction is finished. This implies that the active DMA may not be able to keep up with the demands from the peripheral module being serviced, which may result in data loss.

The DMAxORIF flag being set does not cause the current DMA transfer to terminate.

The overrun interrupt is only available for trigger sources that are edge-based and not available for sources that are level-based. Therefore, a level-based interrupt source does not trigger a DMA overrun error due to the potential latency issues in the system.

An example of an interrupt that could use the overrun interrupt would be a timer overflow (or period match) interrupt. This event only happens every time the timer rolls over and is not dependent on any other system conditions.

An example of an interrupt that does not allow the overrun interrupt would be the UART TX buffer. The UART will continue to assert the interrupt until the DMA is able to process the message. Due to latency issues, the DMA may not be able to service an empty buffer immediately, but the UART continues to assert its transmit interrupt until it is serviced. If overrun was allowed in this case, the overrun would occur almost immediately as the module samples the interrupt sources every instruction cycle.

16.8 DMA Setup and Operation

The following steps illustrate how to configure the DMA for data transfer:

1. Select the desired DMA using the DMASELECT register.
2. Program the appropriate source and destination addresses for the transaction into the DMAnSSA and DMAnDSA registers.
3. Select the source memory region that is being addressed by the DMAnSSA register, using the SMR bits.
4. Program the SMODE and DMODE bits to select the addressing mode.
5. Program the source size (DMAnSSZ) and destination size (DMAnDSZ) registers with the number of bytes to be transferred. It is recommended for proper operation that the size registers be a multiple of each other.
6. If the user desires to disable data transfers once the message has completed, then the SSTP and DSTP bits need to be set. (see Source/Destination Stop).
7. If using hardware triggers for data transfer, setup the hardware trigger interrupt sources for the starting and aborting DMA transfers (DMAnSIRQ and DMAnAIRQ), and set the corresponding interrupt request enable bits (SIRQEN and AIRQEN).
8. Select the priority level for the DMA (see **"System Arbitration"** section in the **"PIC18 CPU"** chapter) and lock the priorities (see **"Priority Lock"** section in the **"PIC18 CPU"** chapter).
9. Enable the DMA by setting the EN bit.
10. If using software control for data transfer, set the DGO bit, else this bit will be set by the hardware trigger.

Once the DMA is set up, Figure 16-5 describes the sequence of operation when the DMA uses hardware triggers and utilizes the unused CPU cycles (bubble) for DMA transfers.

The following sections describe with visual reference the sequence of events for different configurations of the DMA module.

Figure 16-5. DMA Operation with Hardware Trigger

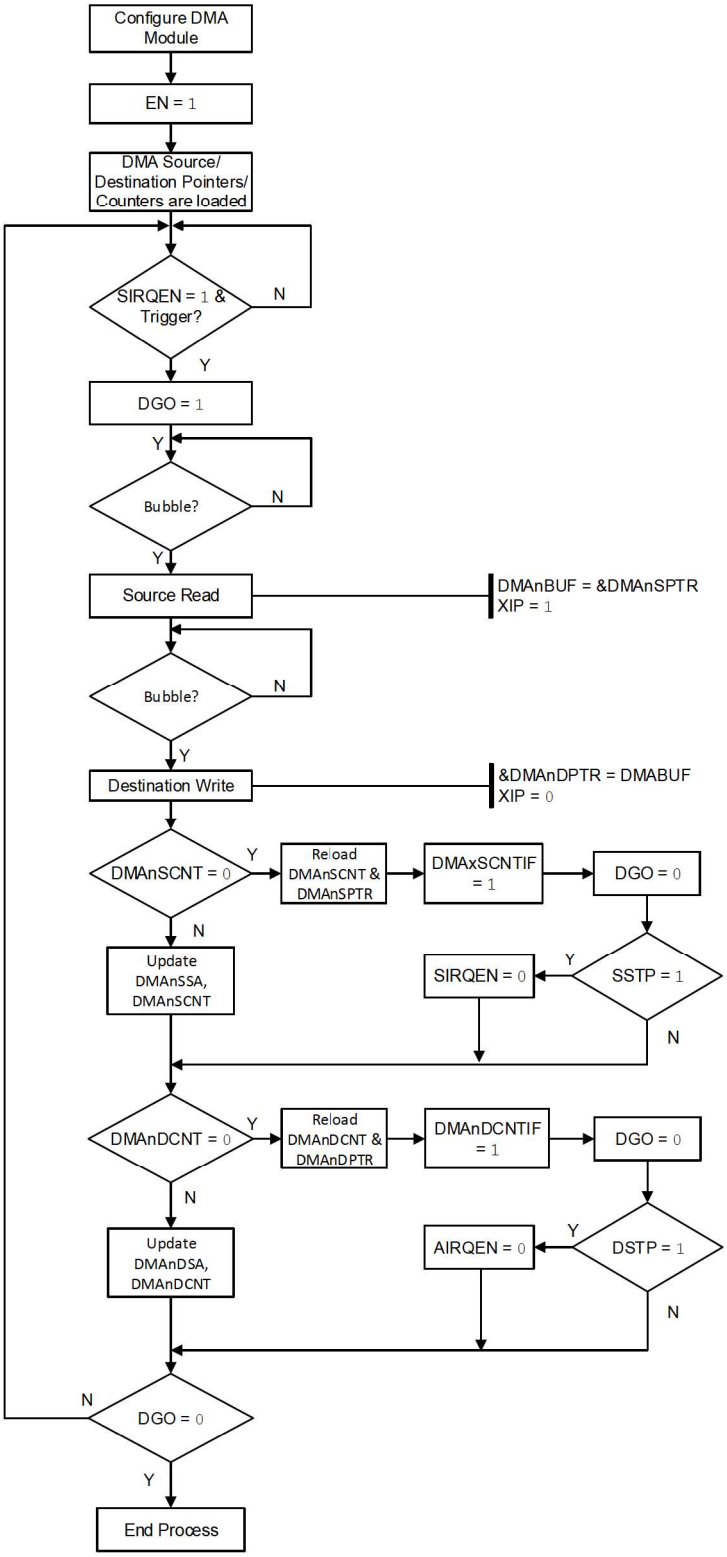

16.8.1 Source Stop

When the Source Stop bit is set (SSTP = 1) and the DMAnSCNT register reloads, the DMA clears the SIRQEN bit to stop receiving new start interrupt request signals and sets the DMAnSCNTIF flag. Refer to the figure below for more details.

Figure 16-6. GPR-GPR Transactions with Hardware Triggers, SSTP = 1

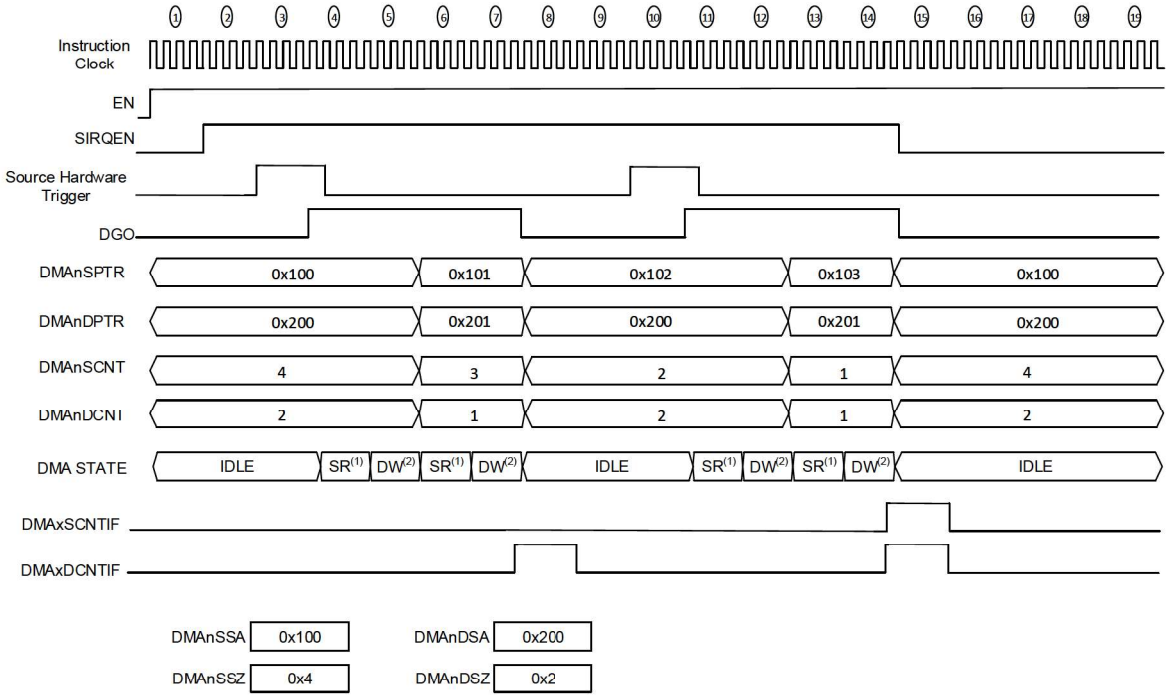

Notes:

1. SR - Source Read
2. DW - Destination Write

16.8.2 Destination Stop

When the Destination Stop bit is set (DSTP = 1) and the DMAnDCNT register reloads, the DMA clears the SIRQEN bit to stop receiving new start interrupt request signals and sets the DMAxDCNTIF flag.

Figure 16-7. GPR-GPR Transactions with Hardware Triggers, DSTP = 1

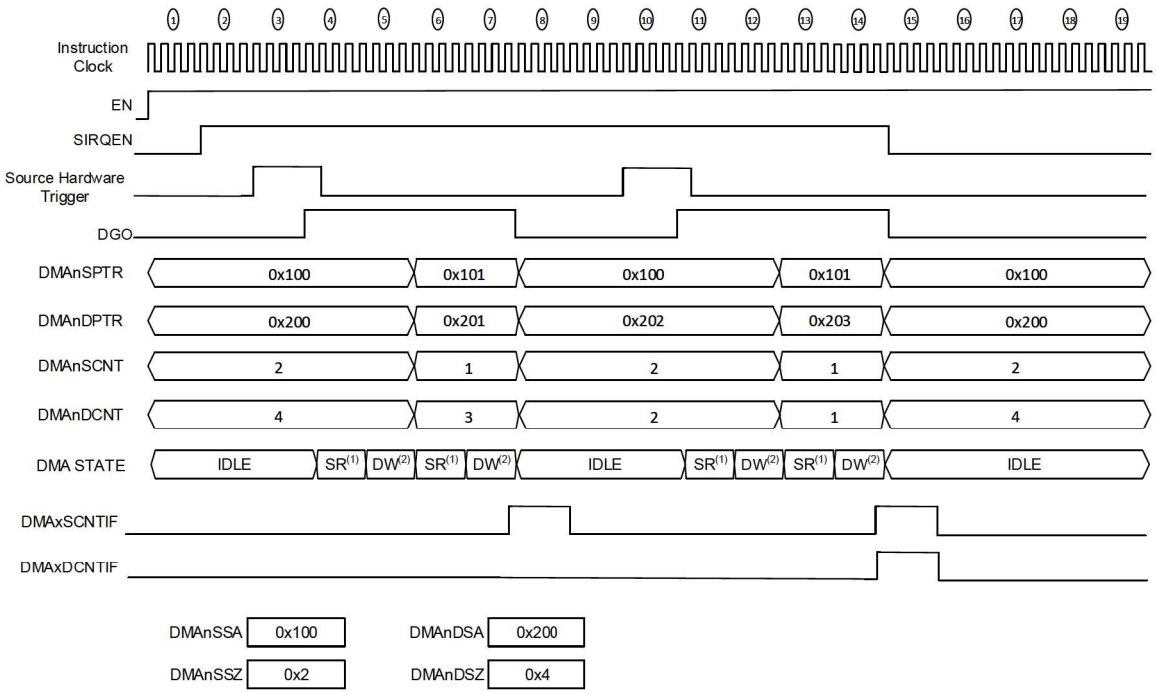

Notes:

1. SR - Source Read
2. DW - Destination Write

16.8.3 Continuous Transfer

When the Source or the Destination Stop bit is cleared (SSTP, DSTP = 0), the transactions continue unless stopped by the user. The DMAxSCNTIF and DMAxDCNTIF flags are set whenever the respective counter registers are reloaded.

Figure 16-8. GPR-GPR Transactions with Hardware Triggers, SSTP, DSTP = 0

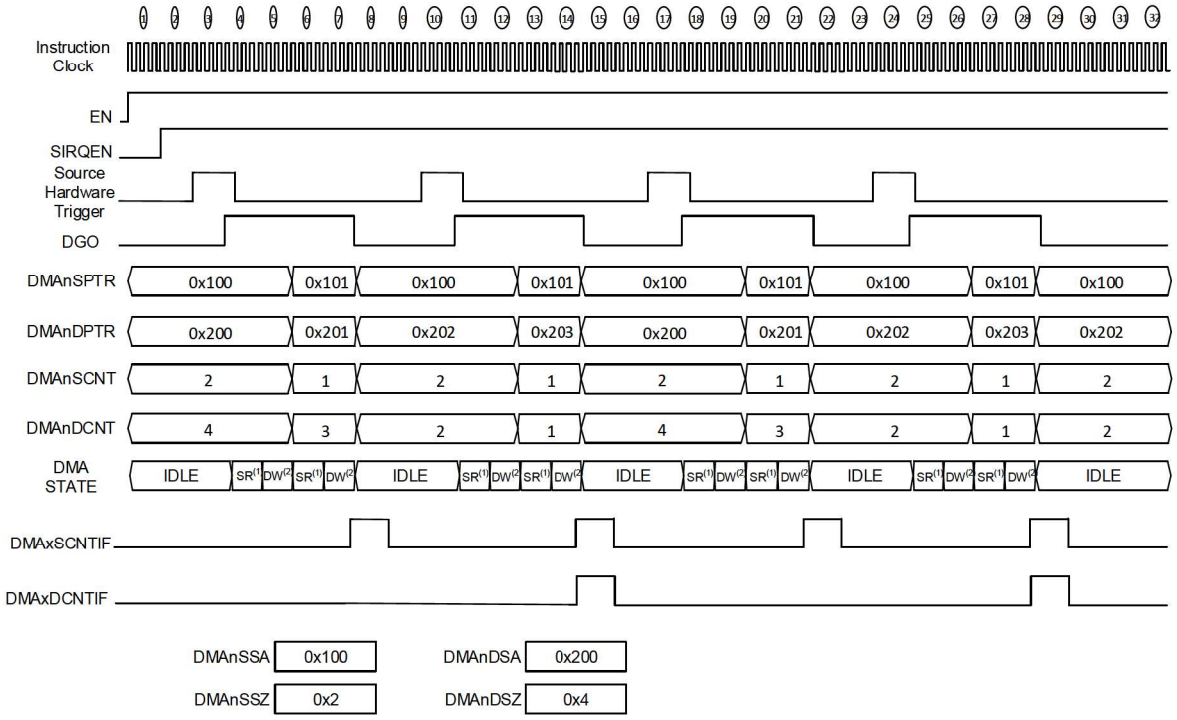

Notes:

1. SR - Source Read
2. DW - Destination Write

16.8.4 Transfer from SFR to GPR

The following visual reference describes the sequence of events when copying ADC results to a GPR location. The ADC Interrupt flag can be chosen as the source hardware trigger, the source address can be set to point to the ADC Result registers (e.g., at 0x3EEF), the destination address can be set to point to any GPR location of our choice (e.g., at 0x100).

Figure 16-9. SFR Space to GPR Space Transfer

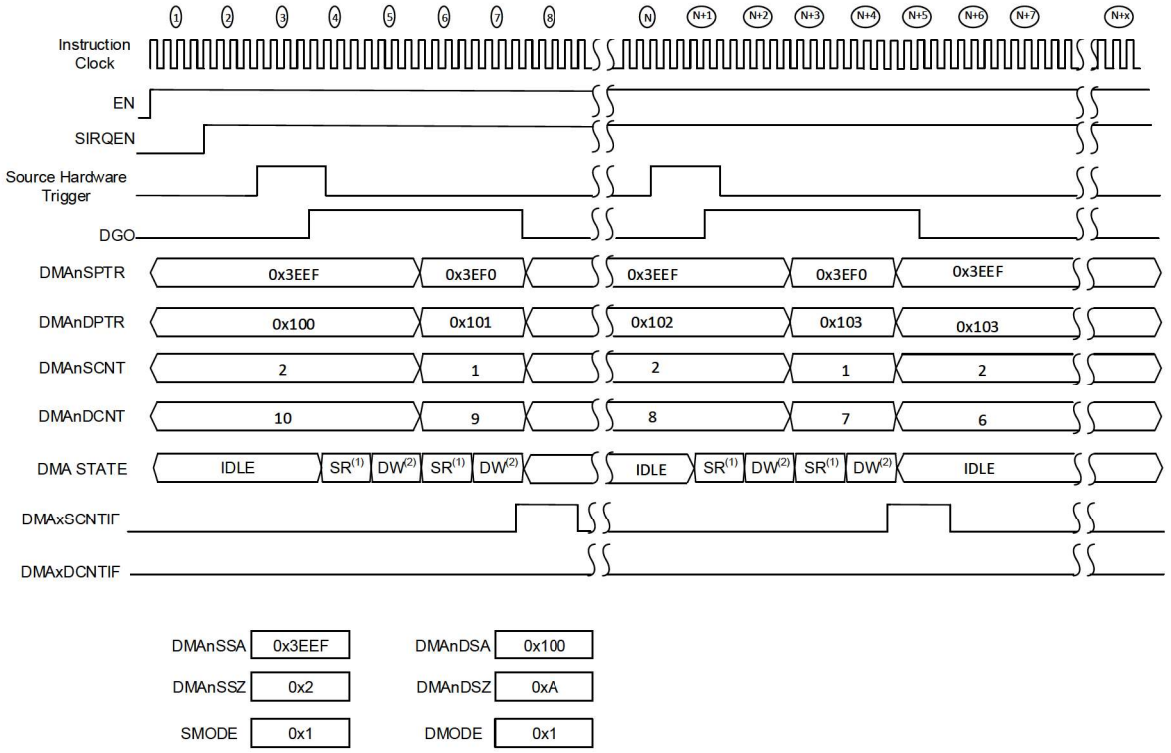

DMAnSSA	0x3EEF	DMAnDSA	0x100
DMAnSSZ	0x2	DMAnDSZ	0xA
SMODE	0x1	DMODE	0x1

Notes:

1. SR - Source Read
2. DW - Destination Write

16.8.5 Overrun Condition

The Overrun Interrupt flag is set if the DMA receives a trigger to start a new message before the current message is completed.

Figure 16-10. Overrun Interrupt

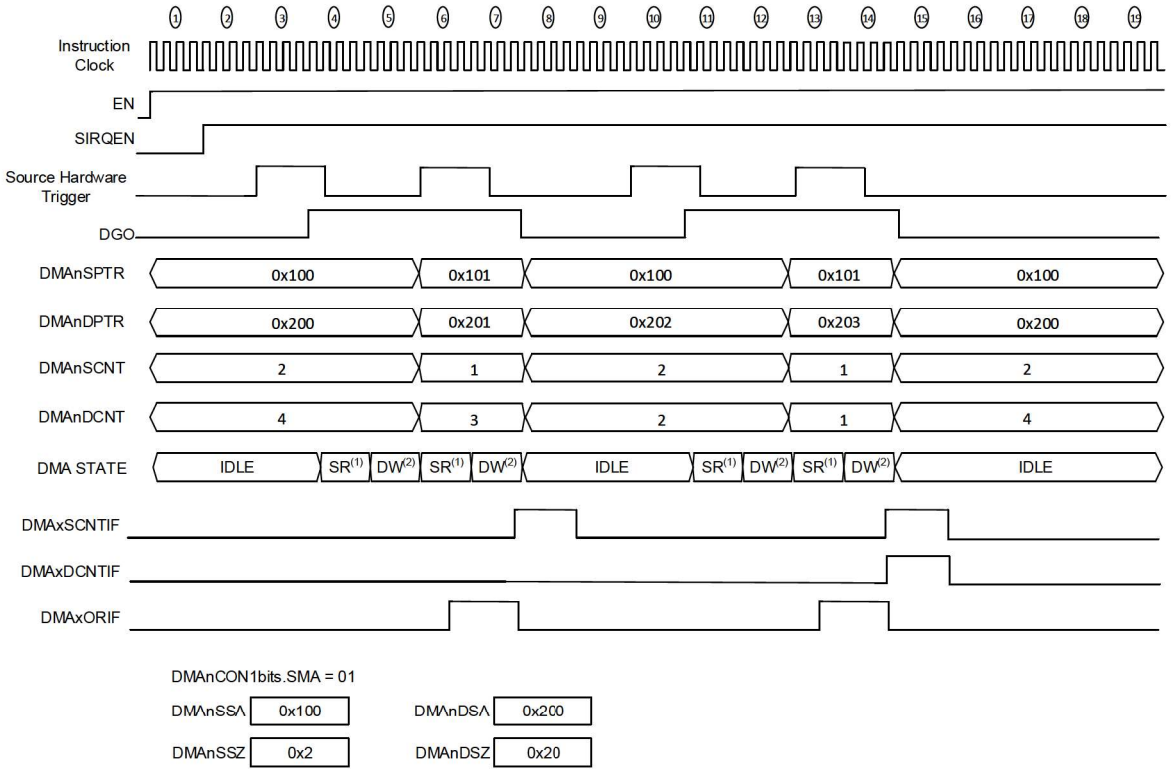

Notes:

1. SR - Source Read
2. DW - Destination Write

16.8.6 Abort Trigger, Message Complete

The AIRQEN needs to be set in order for the DMA to sample abort interrupt sources. When an abort interrupt is received, the SIRQEN bit is cleared and the AIRQEN bit is cleared to avoid receiving further abort triggers.

Figure 16-11. Abort at the End of Message

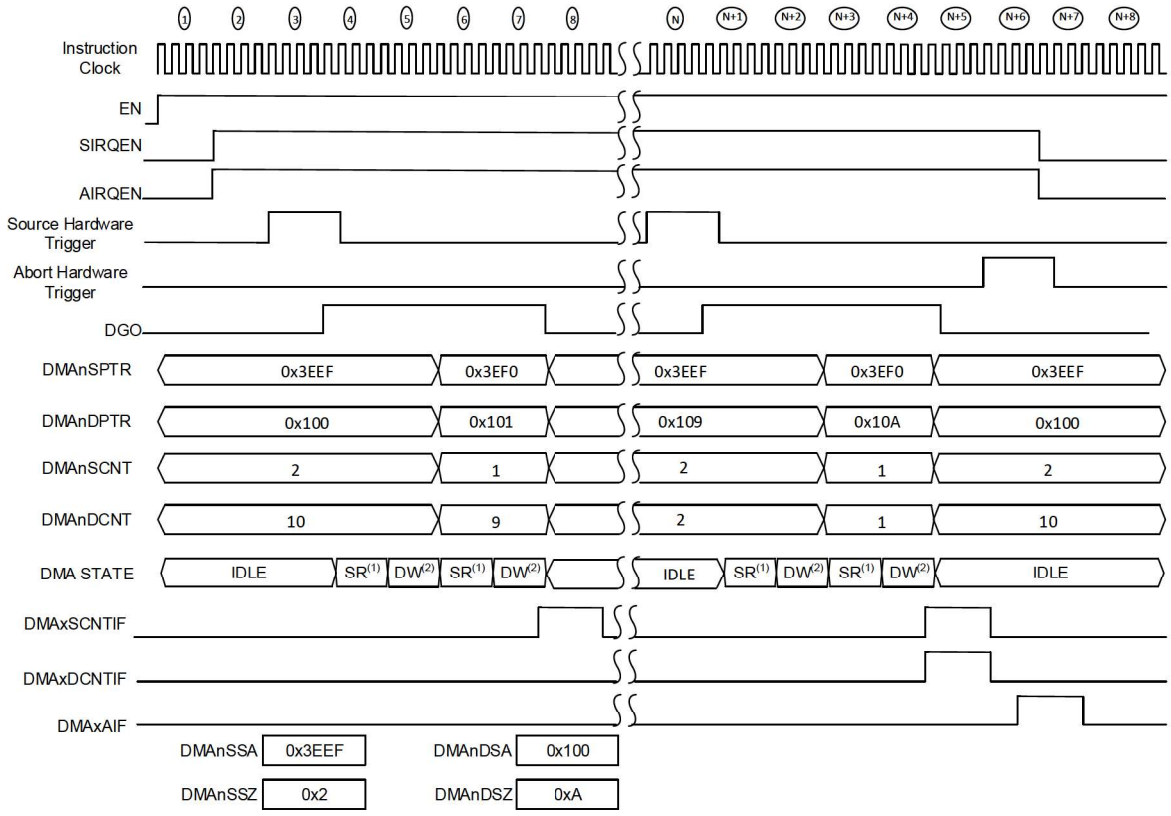

Notes:

1. SR - Source Read
2. DW - Destination Write

16.8.7 Abort Trigger, Message in Progress

When an abort interrupt request is received in a DMA transaction, the DMA will perform a soft-stop by clearing the DGO bit (i.e., if the DMA was reading the source register, it will complete the read operation and then clear the DGO bit).

The SIRQEN bit is cleared to prevent any overrun and the AIRQEN bit is cleared to prevent any false aborts. When the DGO bit is set again, the DMA will resume operation from where it left off after the soft-stop.

Figure 16-12. Abort During Message Transfer

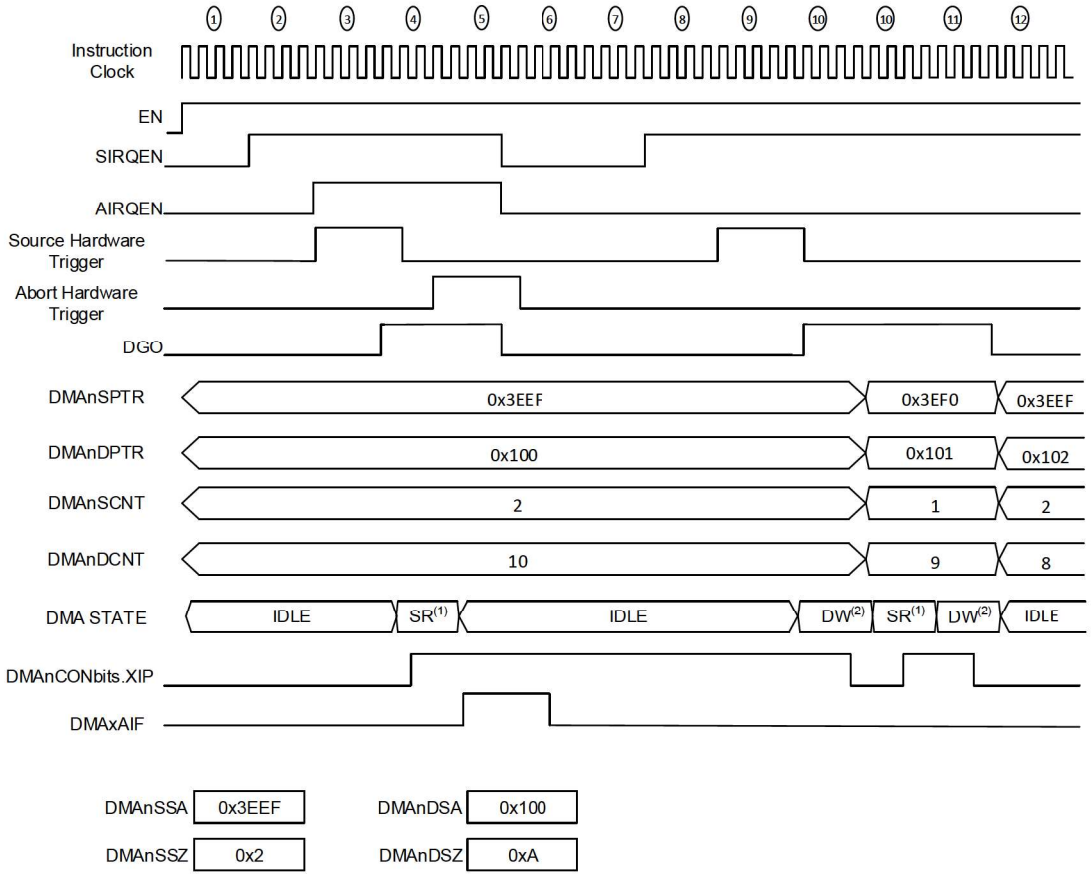

Notes:

1. SR - Source Read
2. DW - Destination Write

16.9 Reset

The DMA registers are set to the default state on any Reset. The registers are also reset to the default state when the enable bit is cleared (EN = 0). User firmware needs to setup all the registers to resume DMA operation.

16.10 Power-Saving Mode Operation

The DMA utilizes system clocks and it is treated as a peripheral when it comes to power-saving operations. Like other peripherals, the DMA also uses Peripheral Module Disable bits to further tailor its operation in low-power states.

16.10.1 Sleep Mode

When the device enters Sleep mode, the system clock to the module is shut down, therefore no DMA operation is supported in Sleep. Once the system clock is disabled, the requisite read and write clocks are also disabled, without which the DMA cannot perform any of its tasks.

Any transfers that may be in progress are resumed on exiting from Sleep mode. Register contents are not affected by the device entering or leaving Sleep mode. It is recommended that DMA transactions be allowed to finish before entering Sleep mode.

16.10.2 Idle Mode

In Idle mode, all of the system clocks (including the read and write clocks) are still operating, but the CPU is not using them to save power.

Therefore, every instruction cycle is available to the system arbiter and if the bubble is granted to the DMA, it may be utilized to move data.

16.10.3 Doze Mode

Similar to the Idle mode, the CPU does not utilize all of the available instruction cycles slots that are available to it in order to save power. It only executes instructions based on its Doze mode settings.

Therefore, every instruction not used by the CPU is available for system arbitration and may be utilized by the DMA, if granted by the arbiter.

16.10.4 Peripheral Module Disable

The Peripheral Module Disable (PMD) registers provide a method to disable DMA by gating all clock sources supplied to it. The respective DMAxMD bit needs to be set in order to disable the DMA.

16.11 Example Setup Code

This code example illustrates using DMA1 to transfer 10 bytes of data from 0x1000 in Flash memory to the UART transmit buffer.

```
void initializeDMA(){
//Select DMA1 by setting DMASELECT register to 0x00
    DMASELECT = 0x00;
//DMAnCON1 - DPTR remains, Source Memory Region PFM, SPTR increments, SSTP
    DMAnCON1 = 0x0B;
//Source registers
//Source size
    DMAnSSZH = 0x00;
    DMAnSSZL = 0x0A;
//Source start address, 0x1000
    DMAnSSAU = 0x00;
    DMAnSSAH = 0x10;
    DMAnSSAL = 0x00;
//Destination registers
//Destination size
    DMAnDSZH = 0x00;
    DMAnDSZL = 0x01;
//Destination start address,
    DMAnDSA = &U1TXB;
//Start trigger source U1TX. Refer the datasheet for the correct code
    DMAnSIRQ = 0xnn;
//Change arbiter priority if needed and perform lock operation
    DMA1PR = 0x01;        // Change the priority only if needed
    PRLOCK = 0x55;           // This sequence
    PRLOCK = 0xAA;           // is mandatory
    PRLOCKbits.PRLOCKED = 1;  // for DMA operation
//Enable the DMA & the trigger to start DMA transfer
    DMAnCON0 = 0xC0;
}
```

16.12 Register Overlay

All DMA instances in this device share the same set of registers. Only one DMA instance is accessible at a time. The value in the DMASELECT register is one less than the selected DMA instance. For example, a DMASELECT value of '0' selects DMA1.

16.13 Register Definitions: DMA

16.13.1 DMASELECT

Name: DMASELECT
Address: 0x0E8

DMA Instance Selection Register

Selects which DMA instance is accessed by the DMA registers

Bit	7	6	5	4	3	2	1	0
						SLCT[2:0]		
Access						R/W	R/W	R/W
Reset						0	0	0

Bits 2:0 – SLCT[2:0] DMA Instance Selection

Value	Description
n	Shared DMA registers of instance n+1 are selected for read and write operations.

16.13.2 DMAnCON0

Name: DMAnCON0
Address: 0x0FC

DMA Control Register 0

Bit	7	6	5	4	3	2	1	0
	EN	SIRQEN	DGO			AIRQEN		XIP
Access	R/W	R/W/HC	R/W/HS/HC			R/W/HC		R/HS/HC
Reset	0	0	0			0		0

Bit 7 – EN DMA Module Enable

Value	Description
1	Enables module
0	Disables module

Bit 6 – SIRQEN Start of Transfer Interrupt Request Enable

Value	Description
1	Hardware triggers are allowed to start DMA transfers
0	Hardware triggers are not allowed to start the DMA transfers

Bit 5 – DGO DMA Transaction

Value	Description
1	DMA transaction is in progress
0	DMA transaction is not in progress

Bit 2 – AIRQEN Abort of Transfer Interrupt Request Enable

Value	Description
1	Hardware triggers are allowed to abort DMA transfers
0	Hardware triggers are not allowed to abort the DMA transfers

Bit 0 – XIP Transfer in Progress Status

Value	Description
1	The DMA buffer register currently holds contents from a read operation and has not transferred data to the destination.
0	The DMA buffer register is empty or has successfully transferred data to the destination address.

16.13.3 DMAnCON1

Name: DMAnCON1
Address: 0x0FD

DMA Control Register 1

Bit	7	6	5	4	3	2	1	0
	DMODE[1:0]		DSTP	SMR[1:0]		SMODE[1:0]		SSTP
Access	R/W	R/W	R/W	R/W	R/W	R/W	R/W	R/W
Reset	0	0	0	0	0	0	0	0

Bits 7:6 – DMODE[1:0] Destination Address Mode Selection

Value	Description
11	Reserved, do not use
10	Destination Pointer (DMADPTR) is decremented after each transfer
01	Destination Pointer (DMADPTR) is incremented after each transfer
00	Destination Pointer (DMADPTR) remains unchanged after each transfer

Bit 5 – DSTP Destination Counter Reload Stop

Value	Description
1	SIRQEN bit is cleared when destination counter reloads
0	SIRQEN bit is not cleared when destination counter reloads

Bits 4:3 – SMR[1:0] Source Memory Region Selection

Value	Description
1x	Data EEPROM is selected as the DMA source memory
01	Program Flash Memory is selected as the DMA source memory
00	SFR/GPR data space is selected as the DMA source memory

Bits 2:1 – SMODE[1:0] Source Address Mode Selection

Value	Description
11	Reserved, do not use
10	Source Pointer (DMASPTR) is decremented after each transfer
01	Source Pointer (DMASPTR) is incremented after each transfer
00	Source Pointer (DMASPTR) remains unchanged after each transfer

Bit 0 – SSTP Source Counter Reload Stop

Value	Description
1	SIRQEN bit is cleared when source counter reloads
0	SIRQEN bit is not cleared when source counter reloads

16.13.4 DMAnBUF

Name: DMAnBUF
Address: 0x0E9

DMA Data Buffer Register

Bit	7	6	5	4	3	2	1	0
	BUF[7:0]							
Access	R	R	R	R	R	R	R	R
Reset	0	0	0	0	0	0	0	0

Bits 7:0 – BUF[7:0] DMA Data Buffer

Description
These bits reflect the content of the internal data buffer the DMA peripheral uses to hold the data being moved from the source to destination.

16.13.5 DMAnSSA

Name: DMAnSSA
Address: 0x0F9

DMA Source Start Address Register

Bit	23	22	21	20	19	18	17	16
			SSA[21:16]					
Access			R/W	R/W	R/W	R/W	R/W	R/W
Reset			0	0	0	0	0	0

Bit	15	14	13	12	11	10	9	8
	SSA[15:8]							
Access	R/W	R/W	R/W	R/W	R/W	R/W	R/W	R/W
Reset	0	0	0	0	0	0	0	0

Bit	7	6	5	4	3	2	1	0
	SSA[7:0]							
Access	R/W	R/W	R/W	R/W	R/W	R/W	R/W	R/W
Reset	0	0	0	0	0	0	0	0

Bits 21:0 – SSA[21:0] Source Start Address

Notes: The individual bytes in this multi-byte register can be accessed with the following register names.

1. DMAnSSAU: Accesses the upper most byte [23:16].
2. DMAnSSAH: Accesses the high byte [15:8].
3. DMAnSSAL: Access the low byte [7:0].

16.13.6 DMAnSSZ

Name: DMAnSSZ
Address: 0x0F7

DMA Source Size Register

Bit	15	14	13	12	11	10	9	8
					SSZ[11:8]			
Access					R/W	R/W	R/W	R/W
Reset					0	0	0	0

Bit	7	6	5	4	3	2	1	0
	SSZ[7:0]							
Access	R/W	R/W	R/W	R/W	R/W	R/W	R/W	R/W
Reset	0	0	0	0	0	0	0	0

Bits 11:0 – SSZ[11:0] Source Message Size

Notes: The individual bytes in this multi-byte register can be accessed with the following register names.

1. DMAnSSZH: Accesses the high byte [15:8].
2. DMAnSSZL: Access the low byte [7:0].

16.13.7 DMAnSCNT

Name: DMAnSCNT
Address: 0x0F2

DMA Source Count Register

Bit	15	14	13	12	11	10	9	8
					SCNT[11:8]			
Access					R/W	R/W	R/W	R/W
Reset					0	0	0	0

Bit	7	6	5	4	3	2	1	0
	SCNT[7:0]							
Access	R/W	R/W	R/W	R/W	R/W	R/W	R/W	R/W
Reset	0	0	0	0	0	0	0	0

Bits 11:0 – SCNT[11:0] Current Source Byte Count

Notes: The individual bytes in this multi-byte register can be accessed with the following register names.

1. DMAnSCNTH: Accesses the high byte [15:8].
2. DMAnSCNTL: Access the low byte [7:0].

16.13.8 DMAnSPTR

Name: DMAnSPTR
Address: 0x0F4

DMA Source Pointer Register

Bit	23	22	21	20	19	18	17	16
			SPTR[21:16]					
Access			R	R	R	R	R	R
Reset			0	0	0	0	0	0

Bit	15	14	13	12	11	10	9	8
	SPTR[15:8]							
Access	R	R	R	R	R	R	R	R
Reset	0	0	0	0	0	0	0	0

Bit	7	6	5	4	3	2	1	0
	SPTR[7:0]							
Access	R	R	R	R	R	R	R	R
Reset	0	0	0	0	0	0	0	0

Bits 21:0 – SPTR[21:0] Current Source Address Pointer

Notes: The individual bytes in this multi-byte register can be accessed with the following register names.

1. DMAnSPTRU: Accesses the upper most byte [23:16].
2. DMAnSPTRH: Accesses the high byte [15:8].
3. DMAnSPTRL: Access the low byte [7:0].

16.13.9 DMAnDSA

Name: DMAnDSA
Address: 0x0F0

DMA Destination Start Address Register

Bit	15	14	13	12	11	10	9	8
	DSA[15:8]							
Access	R/W	R/W	R/W	R/W	R/W	R/W	R/W	R/W
Reset	0	0	0	0	0	0	0	0

Bit	7	6	5	4	3	2	1	0
	DSA[7:0]							
Access	R/W	R/W	R/W	R/W	R/W	R/W	R/W	R/W
Reset	0	0	0	0	0	0	0	0

Bits 15:0 – DSA[15:0] Destination Start Address

Notes: The individual bytes in this multi-byte register can be accessed with the following register names.

1. DMAnDSAH: Accesses the high byte [15:8].
2. DMAnDSAL: Access the low byte [7:0].

16.13.10 DMAnDSZ

Name: DMAnDSZ
Address: 0x0EE

DMA Destination Size Register

Bit	15	14	13	12	11	10	9	8
					DSZ[11:8]			
Access					R/W	R/W	R/W	R/W
Reset					0	0	0	0

Bit	7	6	5	4	3	2	1	0
	DSZ[7:0]							
Access	R/W	R/W	R/W	R/W	R/W	R/W	R/W	R/W
Reset	0	0	0	0	0	0	0	0

Bits 11:0 – DSZ[11:0] Destination Message Size

Notes: The individual bytes in this multi-byte register can be accessed with the following register names.

1. DMAnDSZH: Accesses the high byte [15:8].
2. DMAnDSZL: Access the low byte [7:0].

16.13.11 DMAnDCNT

Name: DMAnDCNT
Address: 0x0EA

DMA Destination Count Register

Bit	15	14	13	12	11	10	9	8
					DCNT[11:8]			
Access					R/W	R/W	R/W	R/W
Reset					0	0	0	0

Bit	7	6	5	4	3	2	1	0
	DCNT[7:0]							
Access	R/W	R/W	R/W	R/W	R/W	R/W	R/W	R/W
Reset	0	0	0	0	0	0	0	0

Bits 11:0 – DCNT[11:0] Current Destination Byte Count

Notes: The individual bytes in this multi-byte register can be accessed with the following register names.

1. DMAnDCNTH: Accesses the high byte [15:8].
2. DMAnDCNTL: Access the low byte Destination Message Size bits [7:0].

16.13.12 DMAnDPTR

Name: DMAnDPTR
Address: 0x0EC

DMA Destination Pointer Register

Bit	15	14	13	12	11	10	9	8
	DPTR[15:8]							
Access	R	R	R	R	R	R	R	R
Reset	0	0	0	0	0	0	0	0

Bit	7	6	5	4	3	2	1	0
	DPTR[7:0]							
Access	R	R	R	R	R	R	R	R
Reset	0	0	0	0	0	0	0	0

Bits 15:0 – DPTR[15:0] Current Destination Address Pointer

Notes: The individual bytes in this multi-byte register can be accessed with the following register names.

1. DMAnDPTRH: Accesses the high byte [15:8].
2. DMAnDPTRL: Access the low byte [7:0].

16.13.13 DMAnSIRQ

Name: DMAnSIRQ
Address: 0x0FF

DMA Start Interrupt Request Source Selection Register

Bit	7	6	5	4	3	2	1	0
	SIRQ[7:0]							
Access	R/W	R/W	R/W	R/W	R/W	R/W	R/W	R/W
Reset	0	0	0	0	0	0	0	0

Bits 7:0 – SIRQ[7:0] DMA Start Interrupt Request Source Selection

Table 16-6. DMAxSIRQ AND DMAxAIRQ INTERRUPT SOURCES

Vector Number	Interrupt source	Vector Number (cont.)	Interrupt source (cont.)
0x0	-	0x30	INT1
0x1	HLVD (High/Low-Voltage Detect)	0x31	-
0x2	OSF (Oscillator Fail)	0x32	CWG1 (Complementary Waveform Generator)
0x3	CSW (Clock Switching)	0x33	NCO1 (Numerically Controlled Oscillator)
0x4	NVM	0x34	DMA2SCNT
0x5	CLC1 (Configurable Logic Cell)	0x35	DMA2DCNT
0x6	CRC (Cyclic Redundancy Check)	0x36	DMA2OR
0x7	IOC (Interrupt-On-Change)	0x37	DMA2A
0x8	INT0	0x38	I2C1RX
0x9	ZCD (Zero-Cross Detection)	0x39	I2C1TX
0xA	AD (ADC Conversion Complete)	0x3A	I2C1
0xB	ACT (Active Clock Tuning)	0x3B	I2C1E
0xC	CM1 (Comparator)	0x3C	-
0xD	SMT1 (Signal Measurement Timer)	0x3D	CLC3
0xE	-	0x3E	PWM3RINT
0xF	SMT1PWA	0x3F	PWM3GINT
0x10	ADT	0x40	U2RX
0x11 - 0x13	-	0x41	U2TX
0x14	DMA1SCNT (Direct Memory Access)	0x42	U2E
0x15	DMA1DCNT	0x43	U2
0x16	DMA1OR	0x44	-
0x17	DMA1A	0x45	CLC4
0x18	SPI1RX (Serial Peripheral Interface)	0x46	-
0x19	SPI1TX	0x47	SCAN
0x1A	SPI1	0x48	U3RX
0x1B	TMR2	0x49	U3TX
0x1C	TMR1	0x4A	U3E
0x1D	TMR1G	0x4B	U3
0x1E	CCP1 (Capture/Compare/PWM)	0x4C	DMA3SCNT
0x1F	TMR0	0x4D	DMA3DCNT
0x20	U1RX	0x4E	DMA3OR
0x21	U1TX	0x4F	DMA3A

.....continued

Vector Number	Interrupt source	Vector Number (cont.)	Interrupt source (cont.)
0x22	U1E	0x50	INT2
0x23	U1	0x51	-
0x24	TMR3	0x52	-
0x25	TMR3G	0x53	TMR4
0x26	PWM1RINT	0x54	DMA4SCNT
0x27	PWM1GINT	0x55	DMA4DCNT
0x28	SPI2RX	0x56	DMA4OR
0x29	SPI2TX	0x57	DMA4A
0x2A	SPI2	0x58	PWM1.S1P1 (PWM1 Parameter 1 of Slice 1)
0x2B	-	0x59	PWM1.S1P2 (PWM1 Parameter 2 of Slice 1)
0x2C	CM2 (Comparator)	0x5A	PWM2S1P1
0x2D	CLC2	0x5B	PWM2S1P2
0x2E	PWM2RINT	0x5C	PWM3S1P1
0x2F	PWM2GINT	0x5D	PWM3S1P2

16.13.14 DMAnAIRQ

Name: DMAnAIRQ
Address: 0x0FE

DMA Abort Interrupt Request Source Selection Register

Bit	7	6	5	4	3	2	1	0
	AIRQ[7:0]							
Access	R/W	R/W	R/W	R/W	R/W	R/W	R/W	R/W
Reset	0	0	0	0	0	0	0	0

Bits 7:0 – AIRQ[7:0] DMA Abort Interrupt Request Source Selection
Refer to DMA Interrupt Sources Table.

16.14 Register Summary - DMA

Address	Name	Bit Pos.	7	6	5	4	3	2	1	0
0x00 ... 0xE7	Reserved									
0xE8	DMASELECT	7:0						SLCT[2:0]		
0xE9	DMAnBUF	7:0	BUF[7:0]							
0xEA	DMAnDCNT	7:0	DCNT[7:0]							
		15:8					DCNT[11:8]			
0xEC	DMAnDPTR	7:0	DPTR[7:0]							
		15:8	DPTR[15:8]							
0xEE	DMAnDSZ	7:0	DSZ[7:0]							
		15:8					DSZ[11:8]			
0xF0	DMAnDSA	7:0	DSA[7:0]							
		15:8	DSA[15:8]							
0xF2	DMAnSCNT	7:0	SCNT[7:0]							
		15:8					SCNT[11:8]			
0xF4	DMAnSPTR	7:0	SPTR[7:0]							
		15:8	SPTR[15:8]							
		23:16			SPTR[21:16]					
0xF7	DMAnSSZ	7:0	SSZ[7:0]							
		15:8					SSZ[11:8]			
0xF9	DMAnSSA	7:0	SSA[7:0]							
		15:8	SSA[15:8]							
		23:16			SSA[21:16]					
0xFC	DMAnCON0	7:0	EN	SIRQEN	DGO			AIRQEN		XIP
0xFD	DMAnCON1	7:0	DMODE[1:0]		DSTP	SMR[1:0]		SMODE[1:0]		SSTP
0xFE	DMAnAIRQ	7:0	AIRQ[7:0]							
0xFF	DMAnSIRQ	7:0	SIRQ[7:0]							

17. Power-Saving Modes

The purpose of the Power-Saving modes is to reduce power consumption. There are three Power-Saving modes:

- Doze mode
- Sleep mode
- Idle mode

17.1 Doze Mode

Doze mode allows for power saving by reducing CPU operation and Program Flash Memory (PFM) access, without affecting peripheral operation. Doze mode differs from Sleep mode because the band gap and system oscillators continue to operate, while only the CPU and PFM are affected. The reduced execution saves power by eliminating unnecessary operations within the CPU and memory.

When the Doze Enable bit is set (DOZEN = 'b1) the CPU executes only one instruction cycle out of every N cycles as defined by the DOZE bits. For example, if DOZE = 001, the instruction cycle ratio is 1:4. The CPU and memory execute for one instruction cycle and then lay idle for three instruction cycles. During the unused cycles, the peripherals continue to operate at the system clock speed.

17.1.1 Doze Operation

The Doze operation is illustrated in Figure 17-1. As with normal operation, the instruction is fetched for the next instruction cycle while the previous instruction is executed. The Q-clocks to the peripherals continue throughout the periods in which no instructions are fetched or executed. The following configuration settings apply for this example:

- Doze enabled (DOZEN = 1)
- CPU instruction cycle to peripheral instruction cycle ratio of 1:4
- Recover-on-Interrupt enabled (ROI = 1)

Figure 17-1. Doze Mode Operation Example

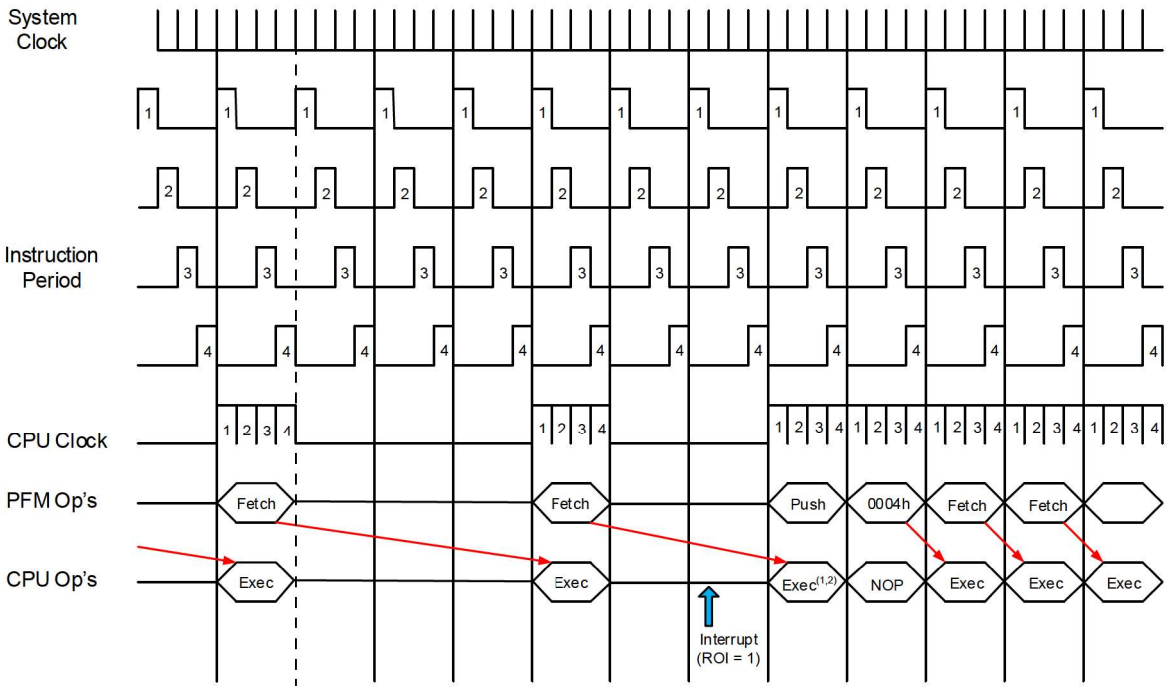

Notes:

1. Multicycle instructions are executed to completion before fetching `0x0004`.
2. If the prefetched instruction clears GIE, the ISR will not occur, but DOZEN is still cleared and the CPU will resume execution at full speed.

17.1.2 Interrupts During Doze

System behavior for interrupts that may occur during Doze mode are be configured using the ROI bit and the DOE bit. Refer to the example below for details about system behavior in all cases for a transition from Main to ISR back to Main.

Example 17-1. Doze Software Example

```
// Mainline operation
bool somethingToDo = FALSE;

void main() {
    initializeSystem();
    // DOZE = 64:1 (for example)
    // ROI = 1;
    GIE = 1; // enable interrupts
    while (1) {
        // If ADC completed, process data
        if (somethingToDo) {
            doSomething();
            DOZEN = 1; // resume low-power
        }
    }
}
// Data interrupt handler

void interrupt() {
    // DOZEN = 0 because ROI = 1
    if (ADIF) {
        somethingToDo = TRUE;
        DOE = 0; // make main() go fast
        ADIF = 0;
    }
    // else check other interrupts...
    if (TMR0IF) {
        timerTick++;
        DOE = 1; // make main() go slow
        TMR0IF = 0;
    }
}
```

Note:

1. User software can change DOE bit in the ISR.

17.2 Sleep Mode

Sleep mode provides the greatest power savings because both the CPU and selected peripherals cease to operate. However, some peripheral clocks continue to operate during sleep. The peripherals that use those clocks also continue to operate. Sleep mode is entered by executing the `SLEEP` instruction, while the IDLEN bit is clear. Upon entering Sleep mode, the following conditions exist:

1. The WDT will be cleared but keeps running if enabled for operation during Sleep
2. The $\overline{PD}$ bit of the STATUS register is cleared
3. The $\overline{TO}$ bit of the STATUS register is set
4. The CPU clock is disabled
5. LFINTOSC, SOSC, HFINTOSC, and ADCRC (FRC) are unaffected. Peripherals using them may continue operation during Sleep.
6. I/O ports maintain the status they had before Sleep was executed (driving high, low, or high-impedance)

7. Resets other than WDT are not affected by Sleep mode

Important: Refer to individual chapters for more details on peripheral operation during Sleep.

To minimize current consumption, the following conditions should be considered:

- I/O pins should not be floating
- External circuitry sinking current from I/O pins
- Internal circuitry sourcing current to I/O pins
- Current draw from pins with internal weak pull-ups
- Peripherals using clock source unaffected by Sleep

I/O pins that are high-impedance inputs should be pulled to V_{DD} or V_{SS} externally to avoid switching currents caused by floating inputs. Examples of internal circuitry that might be consuming current include modules such as the DAC and FVR peripherals.

17.2.1 Wake-up from Sleep

The device can wake-up from Sleep through one of the following events:

1. External Reset input on $\overline{MCLR}$ pin, if enabled
2. BOR Reset, if enabled
3. Low-Power Brown-Out Reset (LPBOR), if enabled
4. POR Reset
5. Windowed Watchdog Timer, if enabled
6. All interrupt sources except clock switch interrupt can wake-up the part.

Important: The first five events will cause a device Reset. The last event in the list is considered a continuation of program execution. Fore more information about determining whether a device Reset or wake-up event occurred, refer to the **"Resets"** chapter.

When the SLEEP instruction is being executed, the next instruction (PC + 2) is prefetched. For the device to wake-up through an interrupt event, the corresponding Interrupt Enable bit must be enabled in the PIEx register. Wake-up will occur regardless of the state of the Global Interrupt Enable (GIE) bit. If the GIE bit is disabled, the device will continue execution at the instruction after the SLEEP instruction. If the GIE bit is enabled, the device executes the instruction after the SLEEP instruction and then call the Interrupt Service Routine (ISR).

Important: It is recommended to add a NOP as the immediate instruction after the SLEEP instruction.

The WDT is cleared when the device wakes-up from Sleep, regardless of the source of wake-up. Upon a wake-from-Sleep event, the core will wait for a combination of three conditions before beginning execution. The conditions are:

- PFM Ready
- System Clock Ready
- BOR Ready (unless BOR is disabled)

17.2.2 Wake-up Using Interrupts

When global interrupts are disabled (GIE cleared) and any interrupt source, with the exception of the clock switch interrupt, has both its interrupt enable bit and interrupt flag bit set, one of the following will occur:

- If the interrupt occurs before the execution of a SLEEP instruction
  - SLEEP instruction will execute as a NOP
  - WDT and WDT prescaler will not be cleared
  - $\overline{TO}$ bit of the STATUS register will not be set
  - $\overline{PD}$ bit of the STATUS register will not be cleared
- If the interrupt occurs during or after the execution of a SLEEP instruction
  - SLEEP instruction will be completely executed
  - Device will immediately wake-up from Sleep
  - WDT and WDT prescaler will be cleared
  - $\overline{TO}$ bit of the STATUS register will be set
  - $\overline{PD}$ bit of the STATUS register will be cleared

In the event where flag bits were checked before executing a SLEEP instruction, it may be possible for flag bits to have become set before the SLEEP instruction completes. To determine whether a SLEEP instruction executed, test the $\overline{PD}$ bit. If the $\overline{PD}$ bit is set, the SLEEP instruction was executed as a NOP.

Figure 17-2. Wake-up From Sleep Through Interrupt

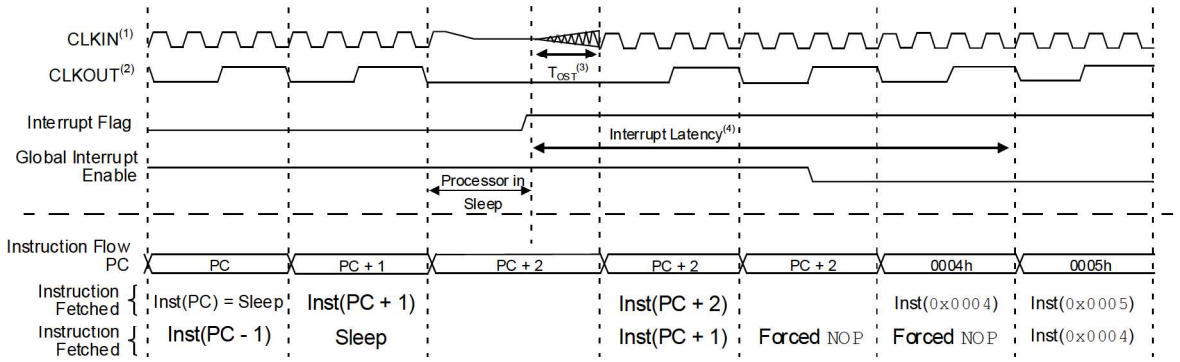

Notes:

1. External clock - High, Medium, Low mode assumed.
2. CLKOUT is shown here for timing reference.
3. T_{OST} = 1024 T_{OSC}. This delay does not apply to EC and INTOSC Oscillator modes.
4. GIE = 1 assumed. In this case after wake-up, the processor calls the ISR at 0x0004. If GIE = 0, execution will continue in-line.

17.2.3 Low-Power Sleep Mode

This device family contains an internal Low Dropout (LDO) voltage regulator, which allows the device I/O pins to operate at voltages up to V_{DD} while the internal device logic operates at a lower voltage. The LDO and its associated reference circuitry must remain active in Sleep but can operate in different power modes. This allows the user to optimize the operating current in Sleep mode, depending on the application requirements.

17.2.3.1 Sleep Current vs. Wake-up Time

The Low-Power Sleep mode can be selected by setting the VREGPM bits as following:

- VREGPM = 'b00; the voltage regulator is in High-Power mode. In this mode, the voltage regulator and reference circuitry remain in the normal configuration while in Sleep. Hence, there is no delay needed for these circuits to stabilize after wake-up. (fastest wake-up from Sleep)
- VREGPM = 'b01; the voltage regulator is in Low-Power mode. In this mode, when waking up from Sleep, an extra delay time is required for the voltage regulator and reference circuitry to return to the normal configuration and stabilize. (faster wake-up from Sleep)
- VREGPM = 'b10; the voltage regulator is in Ultra-Low-Power mode. In this mode, the voltage regulator and reference circuitry are in the lowest current consumption mode and all the auxiliary circuits remain shut down. Wake up from Sleep in this mode need the longest delay time for the voltage regulator and reference circuitry to stabilize. (lowest current consumption)

- VREGPM = 'b11; this mode is the same as VREGPM = 'b01, and is recommended ONLY for extended temperature ranges at or above 70°C.

x

17.2.3.2 Peripheral Usage in Sleep

Some peripherals that can operate in High-Power Sleep mode (VREGPM = 'b00) will not operate as intented in the Low-Power Sleep modes (VREGPM = 'b01 and 'b11). The Low-Power Sleep modes are intended for use with the following peripherals:

- Brown-out Reset (BOR)
- Windowed Watchdog Timer (WWDT)
- External interrupt pin/Interrupt-On-Change pins

It is the responsibility of the end user to determine what is acceptable for their application when setting the VREGPM settings in order to ensure correct operation in Sleep.

17.3 Idle Mode

When the IDLEN bit is clear, the SLEEP instruction will put the device into full Sleep mode. When IDLEN is set, the SLEEP instruction will put the device into Idle mode. In Idle mode, the CPU and memory operations are halted, but the peripheral clocks continue to run. This mode is similar to Doze mode, except that in Idle both the CPU and program memory are shut off.

Important:

1. Peripherals using F_{OSC} will continue to operate while in Idle (but not in Sleep). Peripherals using HFINTOSC:LFINTOSC will continue running in both Idle and Sleep.
2. When the Clock Out Enable ($\overline{\text{CLKOUTEN}}$) Configuration bit is cleared, the CLKOUT pin will continue operating while in Idle.

17.3.1 Idle and Interrupts

Idle mode ends when an interrupt occurs (even if global interrupts are disabled), but IDLEN is not changed. The device can re-enter Idle by executing the SLEEP instruction. If Recover-on-Interrupt is enabled (ROI = 1), the interrupt that brings the device out of Idle also restores full-speed CPU execution when Doze is also enabled.

17.3.2 Idle and WWDT

When in Idle, the WWDT Reset is blocked and will instead wake the device. The WWDT wake-up is not an interrupt, therefore ROI does not apply.

Important: The WWDT can bring the device out of Idle, in the same way it brings the device out of Sleep. The DOZEN bit is not affected.

17.4 Peripheral Operation in Power-Saving Modes

All selected clock sources and the peripherals running from them are active in both Idle and Doze modes. Only in Sleep mode, both the F_{OSC} and $F_{OSC}/4$ clocks are unavailable. However, all other clock sources enabled specifically or through peripheral clock selection before the part enters Sleep, remain operating in Sleep.

17.5 Register Definitions: Power-Savings Control

17.5.1 CPUDOZE

Name: CPUDOZE
Address: 0x4F2

Doze and Idle Register

Bit	7	6	5	4	3	2	1	0
	IDLEN	DOZEN	ROI	DOE		DOZE[2:0]		
Access	R/W	R/W/HC/HS	R/W	R/W/HC/HS		R/W	R/W	R/W
Reset	0	0	0	0		0	0	0

Bit 7 – IDLEN Idle Enable

Value	Description
1	A SLEEP instruction places device into Idle mode
0	A SLEEP instruction places the device into Sleep mode

Bit 6 – DOZEN Doze Enable(1)

Value	Description
1	Places devices into Doze setting
0	Places devices into Normal mode

Bit 5 – ROI Recover-on-Interrupt(1)

Value	Description
1	Entering the Interrupt Service Routine (ISR) makes DOZEN = 0
0	Entering the Interrupt Service Routine (ISR) does not change DOZEN

Bit 4 – DOE Doze-on-Exit(1)

Value	Description
1	Exiting the ISR makes DOZEN = 1
0	Exiting the ISR does not change DOZEN

Bits 2:0 – DOZE[2:0] Ratio of CPU Instruction Cycles to Peripheral Instruction Cycles

Value	Description
111	1:256
110	1:128
101	1:64
100	1:32
011	1:16
010	1:8
001	1:4
000	1:2

Note:

1. When ROI = 1 or DOE = 1.

.

17.5.2 VREGCON

Name: VREGCON
Address: 0x048

Voltage Regulator Control Register

Bit	7	6	5	4	3	2	1	0
			PMSYS[1:0]				VREGPM[1:0]	
Access			R	R			R/W	R/W
Reset			q	q			1	0

Bits 5:4 – PMSYS[1:0] System Power Mode Status

Value	Description
11	Regulator in LP mode for extended temperature range is active
10	Regulator in ULP mode is active
01	Regulator in LP mode is active
00	Regulator in HP mode is active

Bits 1:0 – VREGPM[1:0] Voltage Regulator Power Mode Selection

Value	Description
11	Regulator in Low-Power mode ONLY for extended temperature range
10	Regulator in Ultra-Low-Power mode (lowest current consumption)
01	Regulator in Low-Power mode (faster wake-up from Sleep)
00	Regulator in High-Power mode (fastest wake-up from Sleep)

17.6 Register Summary - Power-Savings Control

Address	Name	Bit Pos.	7	6	5	4	3	2	1	0
0x00 ... 0x47	Reserved									
0x48	VREGCON	7:0			PMSYS[1:0]				VREGPM[1:0]	
0x49 ... 0x04F1	Reserved									
0x04F2	CPUDOZE	7:0	IDLEN	DOZEN	ROI	DOE		DOZE[2:0]		

18. PMD - Peripheral Module Disable

18.1 Overview

This module provides the ability to selectively enable or disable a peripheral. Disabling a peripheral places it in its lowest possible power state. The user can selectively disable unused modules to reduce the overall power consumption.

Important: All modules are ON by default following any system Reset.

18.2 Disabling a Module

A peripheral can be disabled by setting the corresponding peripheral disable bit in the PMDx register. Disabling a module has the following effects:

- The module is held in Reset and does not function.
- All the SFRs pertaining to that peripheral become “unimplemented”
  - Writing is disabled
  - Reading returns `0x00`
- Module outputs are disabled

18.3 Enabling a Module

Clearing the corresponding module disable bit in the PMDx register, re-enables the module and the SFRs will reflect the Power-on Reset values.

Important: There should be no reads/writes to the module SFRs for at least two instruction cycles after it has been re-enabled.

18.4 Register Definitions: Peripheral Module Disable

18.4.1 PMD0

Name: PMD0
Address: 0x063

PMD Control Register 0

Bit	7	6	5	4	3	2	1	0
	SYSCMD	FVRMD	HLVDMD	CRCMD	SCANMD		CLKRMD	IOCMD
Access	R/W	R/W	R/W	R/W	R/W		R/W	R/W
Reset	0	0	0	0	0		0	0

Bit 7 – SYSCMD Disable Peripheral System Clock Network(1)

Value	Description
1	System clock network disabled (F_{OSC})
0	System clock network enabled

Bit 6 – FVRMD Disable Fixed Voltage Reference
Disable Fixed Voltage Reference

Value	Description
1	FVR module disabled
0	FVR module enabled

Bit 5 – HLVDMD Disable High/Low-Voltage Detect

Value	Description
1	HLVD module disabled
0	HLVD module enabled

Bit 4 – CRCMD Disable CRC Module

Value	Description
1	CRC module disabled
0	CRC module enabled

Bit 3 – SCANMD Disable NVM Memory Scanner

Value	Description
1	NVM memory scanner module disabled
0	NVM memory scanner module enabled

Bit 1 – CLKRMD Disable Clock Reference

Value	Description
1	Clock reference module disabled
0	Clock reference module enabled

Bit 0 – IOCMD Disable Interrupt-on-Change

Value	Description
1	Interrupt-on-change module is disabled
0	Interrupt-on-change module is enabled

Note:

1. Clearing the SYSCMD bit disables the system clock (F_{OSC}) to peripherals, however peripherals clocked by $F_{OSC}/4$ are not affected.

18.4.2 PMD1

Name: PMD1
Address: 0x064

PMD Control Register 1

Bit	7	6	5	4	3	2	1	0
	C1MD	ZCDMD	SMT1MD	TMR4MD	TMR3MD	TMR2MD	TMR1MD	TMR0MD
Access	R/W	R/W	R/W	R/W	R/W	R/W	R/W	R/W
Reset	0	0	0	0	0	0	0	0

Bit 7 – C1MD Disable Comparator 1

Value	Description
1	CM1 module disabled
0	CM1 module enabled

Bit 6 – ZCDMD Disable Zero Cross Detect(1)

Value	Description
1	ZCD module disabled
0	ZCD module enabled

Bit 5 – SMT1MD Disable SMT1 Module

Value	Description
1	SMT1 module disabled
0	SMT1 module enabled

Bits 0, 1, 2, 3, 4 – TMRnMD Disable Timer TMRn

Value	Description
1	TMRn module disabled
0	TMRn module enabled

18.4.3 PMD2

Name: PMD2
Address: 0x065

PMD Control Register 2

Bit	7	6	5	4	3	2	1	0
	CCP1MD	CWG1MD	DSM1MD	NCO1MD	ACTMD	DAC1MD	ADCMD	C1MD
Access	R/W	R/W	R/W	R/W	R/W	R/W	R/W	R/W
Reset	0	0	0	0	0	0	0	0

Bit 7 – CCP1MD Disable Capture Compare 1

Value	Description
1	CCP1 module disabled
0	CCP1 module enabled

Bit 6 – CWG1MD Disable Complimentary Waveform Generator 1

Value	Description
1	CWG1 module disabled
0	CWG1 module enabled

Bit 5 – DSM1MD Disable Digital Signal Modulator

Value	Description
1	DSM module disabled
0	DSM module enabled

Bit 4 – NCO1MD Disable Numerically Controlled Oscillator 1

Value	Description
1	NCO1 module disabled
0	NCO1 module enabled

Bit 3 – ACTMD Disable Active Clock Tuning

Value	Description
1	Active Clock Tuning disabled
0	Active Clock Tuning enabled

Bit 2 – DAC1MD Disable Digital-to-Analog Converter

Value	Description
1	DAC module disabled
0	DAC module enabled

Bit 1 – ADCMD Disable Analog-to-Digital Converter

Value	Description
1	ADC module disabled
0	ADC module enabled

Bit 0 – C1MD Disable Comparator 1

Value	Description
1	CM1 module disabled
0	CM1 module enabled

18.4.4 PMD3

Name: PMD3
Address: 0x066

PMD Control Register 3

Bit	7	6	5	4	3	2	1	0
	U2MD	U1MD	SPI2MD	SPI1MD	I2C1MD	PWM3MD	PWM2MD	PWM1MD
Access	R/W	R/W	R/W	R/W	R/W	R/W	R/W	R/W
Reset	0	0	0	0	0	0	0	0

Bits 6, 7 – UnMD Disable UART Un

Value	Description
1	UARTn module disabled
0	UARTn module enabled

Bit 5 – SPI2MD Disable Serial Peripheral Interface 2

Value	Description
1	SPI2 module disabled
0	SPI2 module enabled

Bit 4 – SPI1MD Disable Serial Peripheral Interface 1

Value	Description
1	SPI1 module disabled
0	SPI1 module enabled

Bit 3 – I2C1MD Disable I^2C

Value	Description
1	I^2C1 module disabled
0	I^2C1 module enabled

Bit 2 – PWM3MD Disable Pulse-Width Modulator 3

Value	Description
1	PWM3 module disabled
0	PWM3 module enabled

Bit 1 – PWM2MD Disable Pulse-Width Modulator 2

Value	Description
1	PWM2 module disabled
0	PWM2 module enabled

Bit 0 – PWM1MD Disable Pulse-Width Modulator 1

Value	Description
1	PWM1 module disabled
0	PWM1 module enabled

Note:

1. Subject to the value of $\overline{ZCD}$ Configuration bit.

18.4.5 PMD4

Name: PMD4
Address: 0x067

PMD Control Register 4

Bit	7	6	5	4	3	2	1	0
	DMA3MD	DMA2MD	DMA1MD	CLC4MD	CLC3MD	CLC2MD	CLC1MD	U3MD
Access	R/W	R/W	R/W	R/W	R/W	R/W	R/W	R/W
Reset	0	0	0	0	0	0	0	0

Bits 5, 6, 7 – DMAnMD Disable DMAn

Value	Description
1	DMAn module disabled
0	DMAn module enabled

Bits 1, 2, 3, 4 – CLCnMD Disable CLCn

Value	Description
1	CLCn module disabled
0	CLCn module enabled

Bit 0 – UnMD Disable UART Un

Value	Description
1	UARTn module disabled
0	UARTn module enabled

18.4.6 PMD5

Name: PMD5
Address: 0x068

PMD Control Register 5

Bit	7	6	5	4	3	2	1	0
							DAC2MD	DMA4MD
Access							R/W	R/W
Reset							0	0

Bit 1 – DAC2MD Disable Digital-to-Analog Converter

Value	Description
1	DAC module disabled
0	DAC module enabled

Bit 0 – DMAnMD Disable DMAn

Value	Description
1	DMAn module disabled
0	DMAn module enabled

18.5 Register Summary - PMD

Address	Name	Bit Pos.	7	6	5	4	3	2	1	0
0x00 ... 0x62	Reserved									
0x63	PMD0	7:0	SYSCMD	FVRMD	HLVDMD	CRCMD	SCANMD		CLKRMD	IOCMD
0x64	PMD1	7:0	C1MD	ZCDMD	SMT1MD	TMR4MD	TMR3MD	TMR2MD	TMR1MD	TMR0MD
0x65	PMD2	7:0	CCP1MD	CWG1MD	DSM1MD	NCO1MD	ACTMD	DAC1MD	ADCMD	C1MD
0x66	PMD3	7:0	U2MD	U1MD	SPI2MD	SPI1MD	I2C1MD	PWM3MD	PWM2MD	PWM1MD
0x67	PMD4	7:0	DMA3MD	DMA2MD	DMA1MD	CLC4MD	CLC3MD	CLC2MD	CLC1MD	U3MD
0x68	PMD5	7:0							DAC2MD	DMA4MD

19. I/O Ports

19.1 Overview

Table 19-1. Port Availability per Device

Device	PORTA	PORTB	PORTC
14-pin devices	•(1)		•(3)
20-pin devices	•(1)	•(2)	•

Notes:
1. Pins RA0 - RA5 only
2. Pins RB4 - RB7 only
3. Pins RC0 - RC5 only

Each port has eight registers to control the operation. These registers are:

- PORTx registers (reads the levels on the pins of the device)
- LATx registers (output latch)
- TRISx registers (data direction)
- ANSELx registers (analog select)
- WPUx registers (weak pull-up)
- INLVLx (input level control)
- SLRCONx registers (slew rate control)
- ODCONx registers (open-drain control)

In this chapter the generic names such as PORTx, LATx, TRISx, etc. can be associated with PORTA, PORTB, PORTC, etc., depending on availability per device.

A simplified model of a generic I/O port, without the interfaces to other peripherals, is shown in the following figure:

Figure 19-1. Generic I/O Port Operation

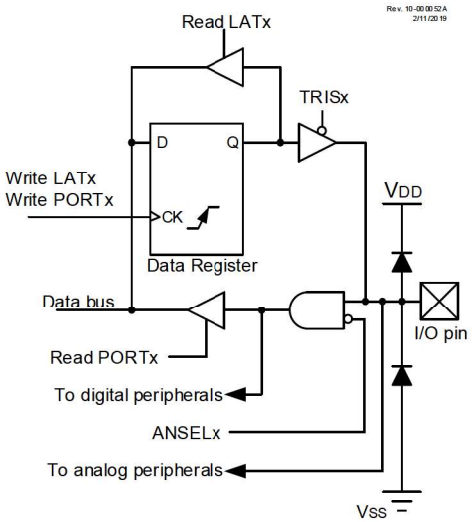

19.2 PORTx - Data Register

PORTx is a bidirectional port, and its corresponding data direction register is TRISx.

Reading the PORTx register reads the status of the pins, whereas writing to it will write to the PORT latch. All write operations are read-modify-write operations. Therefore, a write to a port implies that the PORT pins are read, and this value is modified, then written to the PORT data latch (LATx). The PORT data latch LATx holds the output port data and contains the latest value of a LATx or PORTx write. The example below shows how to initialize PORTA.

Example 19-1. Initializing PORTA in assembly

```
; This code example illustrates initializing the PORTA register.
; The other ports are initialized in the same manner.

    BANKSEL    PORTA        ;
    CLRF       PORTA        ;Clear PORTA
    BANKSEL    LATA         ;
    CLRF       LATA         ;Clear Data Latch
    BANKSEL    ANSELA       ;
    CLRF       ANSELA       ;Enable digital drivers
    BANKSEL    TRISA        ;
    MOVLW      B'00111000'  ;Set RA[5:3] as inputs
    MOVWF      TRISA        ;and set others as outputs
```

Example 19-2. Initializing PORTA in C

```
// This code example illustrates initializing the PORTA register.
// The other ports are initialized in the same manner.

    PORTA  = 0x00;       // Clear PORTA
    LATA   = 0x00;       // Clear Data Latch
    ANSELA = 0x00;       // Enable digital drivers
    TRISA  = 0x38;       // Set RA[5:3] as inputs and set others as outputs
```

Important: Most PORT pins share functions with device peripherals, both analog and digital. In general, when a peripheral is enabled on a PORT pin, that pin cannot be used as a general purpose output; however, the pin can still be read.

19.3 LATx - Output Latch

The Data Latch (LATx registers) is useful for read-modify-write operations on the value that the I/O pins are driving.

A write operation to the LATx register has the same effect as a write to the corresponding PORTx register. A read of the LATx register reads of the values held in the I/O PORT latches, while a read of the PORTx register reads the actual I/O pin value.

Important: As a general rule, output operations to a port should use the LAT register to avoid read-modify-write issues. For example, a bit set or clear operation reads the port, modifies the bit, and writes the result back to the port. When two bit operations are executed in succession, output loading on the changed bit may delay the change at the output in which case the bit will be misread in the second bit operation and written to an unexpected level. The LAT registers are isolated from the port loading and therefore changes are not delayed.

19.4 TRISx - Direction Control

The TRISx register controls the PORTx pin output drivers, even when the pins are being used as analog inputs. The user should ensure the bits in the TRISx register are set when using the pins as analog inputs. I/O pins configured as analog inputs always read '0'.

Setting a TRISx bit (TRISx = 1) will make the corresponding PORTx pin an input (i.e., disable the output driver). Clearing a TRISx bit (TRISx = 0) will make the corresponding PORTx pin an output (i.e., it enables output driver and puts the contents of the output latch on the selected pin).

19.5 ANSELx - Analog Control

Ports that support analog inputs have an associated ANSELx register. The ANSELx register is used to configure the input mode of an I/O pin to analog. Setting an ANSELx bit high will disable the digital input buffer associated with that bit and cause the corresponding input value to always read '0', whether the value is read in PORTx register or selected by PPS as a peripheral input.

Disabling the input buffer prevents analog signal levels on the pin between a logic high and low from causing excessive current in the logic input circuitry.

The state of the ANSELx bits has no effect on digital or analog output functions. A pin with TRIS clear and ANSEL set will still operate as a digital output, but the input mode will be analog. This can cause unexpected behavior when executing read-modify-write instructions on the PORTx register.

Important: The ANSELx bits default to the Analog mode after Reset. To use any pins as digital general purpose or peripheral inputs, the corresponding ANSEL bits must be changed to '0' by user.

19.6 WPUx - Weak Pull-Up Control

The WPUx register controls the individual weak pull-ups for each PORT pin. When a WPUx bit is set (WPUx = 1), the weak pull-up will be enabled for the corresponding pin. When a WPUx bit is cleared (WPUx = 0), the weak pull-up will be disabled for the corresponding pin.

19.7 INLVLx - Input Threshold Control

The INLVLx register controls the input voltage threshold for each of the available PORTx input pins. A selection between the Schmitt Trigger CMOS or the TTL compatible thresholds is available. If that feature is enabled, the input threshold is important in determining the value of a read of the PORTx register and also all other peripherals which are connected to the input. Refer to the I/O Ports table in the **"Electrical Specifications"** chapter for more details on threshold levels.

Important: Changing the input threshold selection should be performed while all peripheral modules are disabled. Changing the threshold level during the time a module is active may inadvertently generate a transition associated with an input pin, regardless of the actual voltage level on that pin.

19.8 SLRCONx - Slew Rate Control

The SLRCONx register controls the slew rate option for each PORT pin. Slew rate for each PORT pin can be controlled independently. When a SLRCONx bit is set (SLRCONx = 1), the corresponding PORT pin drive is slew

rate limited. When a SLRCONx bit is cleared (SLRCONx = 0), The corresponding PORT pin drive slews at the maximum rate possible.

19.9 ODCONx - Open-Drain Control

The ODCONx register controls the open-drain feature of the port. Open-drain operation is independently selected for each pin. When a ODCONx bit is set (ODCONx = 1), the corresponding port output becomes an open-drain driver capable of sinking current only. When a ODCONx bit is cleared (ODCONx = 0), the corresponding port output pin is the standard push-pull drive capable of sourcing and sinking current.

Important: It is necessary to set open-drain control when using the pin for I^2C.

19.10 Edge Selectable Interrupt-on-Change

An interrupt can be generated by detecting a signal at the PORT pin that has either a rising edge or a falling edge. Individual pins can be independently configured to generate an interrupt. Refer to the **"IOC - Interrupt-on-Change"** chapter for more details.

19.11 I^2C Pad Control

For this family of devices, the I^2C specific pads are available on RB4, RB6, RC0 and RC1 pins. The I^2C characteristics of each of these pins is controlled by the RxyI2C registers. These characteristics include enabling I^2C specific slew rate (over standard GPIO slew rate), selecting internal pull-ups for I^2C pins, and selecting appropriate input threshold as per SMBus specifications.

Important: Any peripheral using the I^2C pins reads the I^2C input levels when enabled via RxyI2C.

19.12 I/O Priorities

Each pin defaults to the data latch after Reset. Other functions are selected with the peripheral pin select logic. Refer to the **"PPS - Peripheral Pin Select Module"** chapter for more details.

Analog input functions, such as ADC and comparator inputs, are not shown in the peripheral pin select lists. These inputs are active when the I/O pin is set for Analog mode using the ANSELx register. Digital output functions may continue to control the pin when it is in Analog mode.

Analog outputs, when enabled, take priority over digital outputs and force the digital output driver into a high-impedance state.

The pin function priorities are as follows:

1. Port functions determined by the Configuration bits
2. Analog outputs (input buffers should be disabled)
3. Analog inputs
4. Port inputs and outputs from PPS

19.13 $\overline{MCLR}/V_{PP}$/RA3 Pin

The $\overline{MCLR}/V_{PP}$ pin is an input-only pin. Its operation is controlled by the MCLRE Configuration bit. When selected as a PORT pin (MCLRE = 0), it functions as a digital input-only pin; as such, it does not have TRISx and LATx bits associated with its operation. Otherwise, it functions as the device's Master Clear input. In either configuration, the $\overline{MCLR}/V_{PP}$ pin also functions as the programming voltage input pin during high voltage programming.

The $\overline{MCLR}/V_{PP}$ pin is a read-only bit and will read '1' when MCLRE = 1 (i.e., Master Clear enabled).

Important: On a Power-on Reset, the $\overline{MCLR}/V_{PP}$ pin is enabled as a digital input-only if Master Clear functionality is disabled.

The $\overline{MCLR}/V_{PP}$ pin has an individually controlled internal weak pull-up. When set, the corresponding WPU bit enables the pull-up. When the $\overline{MCLR}/V_{PP}$ pin is configured as $\overline{MCLR}$, (MCLRE = 1 and, LVP = 0), or configured for Low-Voltage Programming, (MCLRE = x and LVP = 1), the pull-up is always enabled and the WPU bit has no effect.

19.14 Register Definitions: Port Control

19.14.1 PORTx

Name: PORTx

PORTx Register

Bit	7	6	5	4	3	2	1	0
	Rx7	Rx6	Rx5	Rx4	Rx3	Rx2	Rx1	Rx0
Acccss	R/W	R/W	R/W	R/W	R/W	R/W	R/W	R/W
Reset	x	x	x	x	x	x	x	x

Bits 0, 1, 2, 3, 4, 5, 6, 7 – Rxn Port I/O Value
Reset States: POR/BOR = xxxxxxxx
All Other Resets = uuuuuuuu

Value	Description
1	PORT pin is ≥ V_{IH}
0	PORT pin is ≤ V_{IL}

Important:

- Writes to PORTx are actually written to the corresponding LATx register. Reads from PORTx register return actual I/O pin values.
- The PORT bit associated with the $\overline{MCLR}$ pin is Read-Only and will read '1' when $\overline{MCLR}$ function is enabled (LVP = 1 or (LVP = 0 and MCLRE = 1)).
- Refer to the **"Pin Allocation Table"** for details about $\overline{MCLR}$ pin and pin availability per port.

19.14.2 LATx

Name: LATx

Output Latch Register

Bit	7	6	5	4	3	2	1	0
	LATx7	LATx6	LATx5	LATx4	LATx3	LATx2	LATx1	LATx0
Acccss	R/W	R/W	R/W	R/W	R/W	R/W	R/W	R/W
Reset	x	x	x	x	x	x	x	x

Bits 0, 1, 2, 3, 4, 5, 6, 7 – LATxn Output Latch Value
Reset States: POR/BOR = xxxxxxxx
All Other Resets = uuuuuuuu

Important:

- Writes to LATx are equivalent with writes to the corresponding PORTx register. Reads from LATx register return register values, not I/O pin values.
- Refer to the **"Pin Allocation Table"** for details about pin availability per port.

19.14.3 TRISx

Name: TRISx

Tri-State Control Register

Bit	7	6	5	4	3	2	1	0
	TRISx7	TRISx6	TRISx5	TRISx4	TRISx3	TRISx2	TRISx1	TRISx0
Acccss	R/W	R/W	R/W	R/W	R/W	R/W	R/W	R/W
Reset	1	1	1	1	1	1	1	1

Bits 0, 1, 2, 3, 4, 5, 6, 7 – TRISxn Port I/O Tri-state Control

Value	Description
1	PORTx output driver is disabled. PORTx pin configured as an input (tri-stated)
0	PORTx output driver is enabled. PORTx pin configured as an output

Important:

- The TRIS bit associated with the $\overline{\text{MCLR}}$ pin is Read-Only and the value is 1.
- Refer to the **"Pin Allocation Table"** for details about $\overline{\text{MCLR}}$ pin and pin availability per port.

19.14.4 ANSELx

Name: ANSELx

Analog Select Register

Bit	7	6	5	4	3	2	1	0
	ANSELx7	ANSELx6	ANSELx5	ANSELx4	ANSELx3	ANSELx2	ANSELx1	ANSELx0
Acccss	R/W	R/W	R/W	R/W	R/W	R/W	R/W	R/W
Reset	1	1	1	1	1	1	1	1

Bits 0, 1, 2, 3, 4, 5, 6, 7 – ANSELxn Analog Select on Rx Pin

Value	Description
1	Analog input. Pin is assigned as analog input. Digital input buffer disabled.
0	Digital I/O. Pin is assigned to port or digital special function.

Important:

- When setting a pin as an analog input, the corresponding TRIS bit must be set to Input mode in order to allow external control of the voltage on the pin.
- Refer to the **"Pin Allocation Table"** for details about pin availability per port.

19.14.5 WPUx

Name: WPUx

Weak pull-up Register

Bit	7	6	5	4	3	2	1	0
	WPUx7	WPUx6	WPUx5	WPUx4	WPUx3	WPUx2	WPUx1	WPUx0
Acccss	R/W	R/W	R/W	R/W	R/W	R/W	R/W	R/W
Reset	0	0	0	0	0	0	0	0

Bits 0, 1, 2, 3, 4, 5, 6, 7 – WPUxn Weak Pull-up PORTx Control

Value	Description
1	Weak pull-up enabled
0	Weak pull-up disabled

Important:

- The weak pull-up device is automatically disabled if the pin is configured as an output but this register remains unchanged.
- If MCLRE = 1, the weak pull-up on $\overline{\text{MCLR}}$ pin is always enabled and the corresponding WPU bit is not affected.
- Refer to the **"Pin Allocation Table"** for details about pin availability per port.

19.14.6 INLVLx

Name: INLVLx

Input Level Control Register

Bit	7	6	5	4	3	2	1	0
	INLVLx7	INLVLx6	INLVLx5	INLVLx4	INLVLx3	INLVLx2	INLVLx1	INLVLx0
Acccss	R/W	R/W	R/W	R/W	R/W	R/W	R/W	R/W
Reset	1	1	1	1	1	1	1	1

Bits 0, 1, 2, 3, 4, 5, 6, 7 – INLVLxn Input Level Select on Rx Pin

Value	Description
1	ST input used for port reads and interrupt-on-change
0	TTL input used for port reads and interrupt-on-change

Important: Refer to the **"Pin Allocation Table"** for details about pin availability per port.

19.14.7 SLRCONx

Name: SLRCONx

Slew Rate Control Register

Bit	7	6	5	4	3	2	1	0
	SLRx7	SLRx6	SLRx5	SLRx4	SLRx3	SLRx2	SLRx1	SLRx0
Acccss	R/W	R/W	R/W	R/W	R/W	R/W	R/W	R/W
Reset	1	1	1	1	1	1	1	1

Bits 0, 1, 2, 3, 4, 5, 6, 7 – SLRxn Slew Rate Control on Rx Pin

Value	Description
1	PORT pin slew rate is limited
0	PORT pin slews at maximum rate

Important: Refer to the **"Pin Allocation Table"** for details about pin availability per port.

19.14.8 ODCONx

Name: ODCONx

Open-Drain Control Register

Bit	7	6	5	4	3	2	1	0
	ODCx7	ODCx6	ODCx5	ODCx4	ODCx3	ODCx2	ODCx1	ODCx0
Acccss	R/W	R/W	R/W	R/W	R/W	R/W	R/W	R/W
Reset	0	0	0	0	0	0	0	0

Bits 0, 1, 2, 3, 4, 5, 6, 7 – ODCxn Open-Drain Configuration on Rx Pin

Value	Description
1	PORT pin operates as open-drain drive (sink current only)
0	PORT pin operates as standard push-pull drive (source and sink current)

Important: Refer to the **"Pin Allocation Table"** for details about pin availability per port.

19.14.9 RxyI2C

Name: RxyI2C

I²C Pad Rxy Control Register

Bit	7	6	5	4	3	2	1	0
	SLEW[1:0]		PU[1:0]				TH[1:0]	
Acccss	R/W	R/W	R/W	R/W			R/W	R/W
Reset	0	0	0	0			0	0

Bits 7:6 – SLEW[1:0] I²C Specific Slew Rate Limiting Control

Value	Description
11	I²C fast-mode-plus (1 MHz) slew rate enabled. The SLRxy bit is ignored.
10	Reserved
01	I²C fast-mode (400 kHz) slew rate enabled. The SLRxy bit is ignored.
00	Standard GPIO Slew Rate; enabled/disabled via SLRxy bit

Bits 5:4 – PU[1:0] I²C Pull-up Selection

Value	Description
11	Reserved
10	10x current of standard weak pull-up
01	2x current of standard weak pull-up
00	Standard GPIO weak pull-up, enabled via WPUxy bit

Bits 1:0 – TH[1:0] I²C Input Threshold Selection

Value	Description
11	SMBus 3.0 (1.35V) input threshold
10	SMBus 2.0 (2.1 V) input threshold
01	I²C-specific input thresholds
00	Standard GPIO Input pull-up, enabled via INLVLxy registers

Important: Refer to the **"Pin Allocation Table"** for details about I²C compatible pins.

19.15 Register Summary - IO Ports

Address	Name	Bit Pos.	7	6	5	4	3	2	1	0
0x00 ... 0x0285	Reserved									
0x0286	RB6I2C	7:0	SLEW[1:0]		PU[1:0]				TH[1:0]	
0x0287	RB4I2C	7:0	SLEW[1:0]		PU[1:0]				TH[1:0]	
0x0288	RC1I2C	7:0	SLEW[1:0]		PU[1:0]				TH[1:0]	
0x0289	RC0I2C	7:0	SLEW[1:0]		PU[1:0]				TH[1:0]	
0x028A ... 0x03FF	Reserved									
0x0400	ANSELA	7:0			ANSELA5	ANSELA4		ANSELA2	ANSELA1	ANSELA0
0x0401	WPUA	7:0			WPUA5	WPUA4	WPUA3	WPUA2	WPUA1	WPUA0
0x0402	ODCONA	7:0			ODCA5	ODCA4		ODCA2	ODCA1	ODCA0
0x0403	SLRCONA	7:0			SLRA5	SLRA4		SLRA2	SLRA1	SLRA0
0x0404	INLVLA	7:0			INLVLA5	INLVLA4	INLVLA3	INLVLA2	INLVLA1	INLVLA0
0x0405 ... 0x0407	Reserved									
0x0408	ANSELB	7:0	ANSELB7	ANSELB6	ANSELB5	ANSELB4				
0x0409	WPUB	7:0	WPUB7	WPUB6	WPUB5	WPUB4				
0x040A	ODCONB	7:0	ODCB7	ODCB6	ODCB5	ODCB4				
0x040B	SLRCONB	7:0	SLRB7	SLRB6	SLRB5	SLRB4				
0x040C	INLVLB	7:0	INLVLB7	INLVLB6	INLVLB5	INLVLB4				
0x040D ... 0x040F	Reserved									
0x0410	ANSELC	7:0	ANSELC7	ANSELC6	ANSELC5	ANSELC4	ANSELC3	ANSELC2	ANSELC1	ANSELC0
0x0411	WPUC	7:0	WPUC7	WPUC6	WPUC5	WPUC4	WPUC3	WPUC2	WPUC1	WPUC0
0x0412	ODCONC	7:0	ODCC7	ODCC6	ODCC5	ODCC4	ODCC3	ODCC2	ODCC1	ODCC0
0x0413	SLRCONC	7:0	SLRC7	SLRC6	SLRC5	SLRC4	SLRC3	SLRC2	SLRC1	SLRC0
0x0414	INLVLC	7:0	INLVLC7	INLVLC6	INLVLC5	INLVLC4	INLVLC3	INLVLC2	INLVLC1	INLVLC0
0x0415 ... 0x04BD	Reserved									
0x04BE	LATA	7:0			LATA5	LATA4		LATA2	LATA1	LATA0
0x04BF	LATB	7:0	LATB7	LATB6	LATB5	LATB4				
0x04C0	LATC	7:0	LATC7	LATC6	LATC5	LATC4	LATC3	LATC2	LATC1	LATC0
0x04C1 ... 0x04C5	Reserved									
0x04C6	TRISA	7:0			TRISA5	TRISA4	Reserved	TRISA2	TRISA1	TRISA0
0x04C7	TRISB	7:0	TRISB7	TRISB6	TRISB5	TRISB4				
0x04C8	TRISC	7:0	TRISC7	TRISC6	TRISC5	TRISC4	TRISC3	TRISC2	TRISC1	TRISC0
0x04C9 ... 0x04CD	Reserved									
0x04CE	PORTA	7:0			RA5	RA4	RA3	RA2	RA1	RA0
0x04CF	PORTB	7:0	RB7	RB6	RB5	RB4				
0x04D0	PORTC	7:0	RC7	RC6	RC5	RC4	RC3	RC2	RC1	RC0

20. IOC - Interrupt-on-Change

20.1 Overview

The pins denoted in the table below can be configured to operate as Interrupt-on-Change (IOC) pins for this device. An interrupt can be generated by detecting a signal that has either a rising edge or a falling edge. Any individual PORT pin, or combination of PORT pins, can be configured to generate an interrupt.

Table 20-1. IOC Pin Availability per Device

Device	PORTA	PORTB	PORTC
14-pin devices	•		•
20-pin devices	•	•	•

Important: If MCLRE = 1 or LVP = 1, the $\overline{MCLR}$ pin port functionality is disabled and IOC on that pin is not available

The Interrupt-on-Change module has the following features:

- Interrupt-on-Change enable (Master Switch)
- Individual pin configuration
- Rising and falling edge detection
- Individual pin interrupt flags

The following figure is a block diagram of the IOC module.

Figure 20-1. Interrupt-on-Change Block Diagram (PORTA Example)

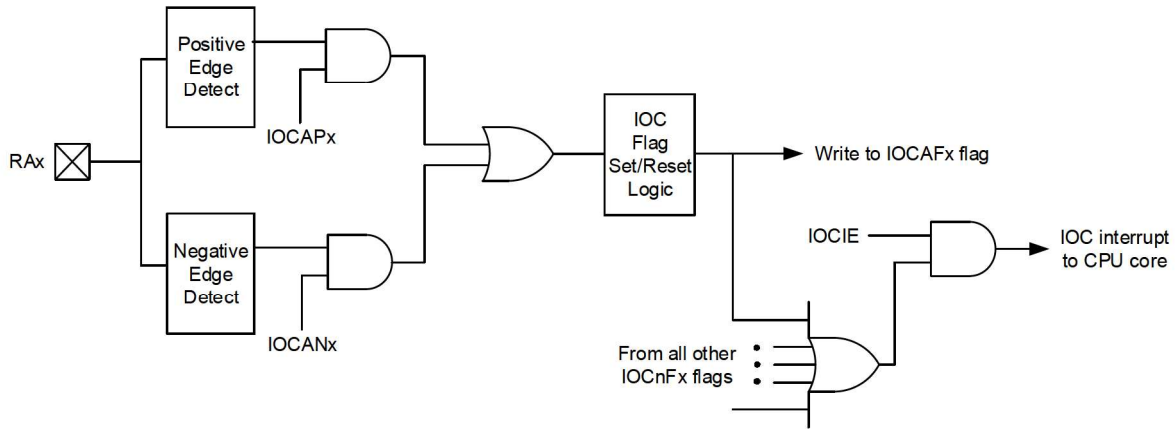

20.2 Enabling the Module

In order for individual PORT pins to generate an interrupt, the IOC Interrupt Enable bit (IOCIE) of the Peripheral Interrupt Enable register (PIEx) must be set. If the IOC Interrupt Enable bit is disabled, the edge detection on the pin will still occur, but an interrupt will not be generated.

20.3 Individual Pin Configuration

A rising edge detector and a falling edge detector are present for each PORT pin. To enable a pin to detect a rising edge, the associated bit of the IOCxP register must be set. To enable a pin to detect a falling edge, the associated bit of the IOCxN register must be set. A PORT pin can be configured to detect rising and falling edges simultaneously by setting both associated bits of the IOCxP and IOCxN registers, respectively.

20.4 Interrupt Flags

The bits located in the IOCxF registers are status flags that correspond to the interrupt-on-change pins of each port. If an expected edge is detected on an appropriately enabled pin, then the status flag for that pin will be set, and an interrupt will be generated if the IOCIE bit is set. The IOCIF bit located in the corresponding Peripheral Interrupt Request register (PIRx), is all the IOCxF bits ORd together. The IOCIF bit is read-only. All of the IOCxF Status bits must be cleared to clear the IOCIF bit.

20.5 Clearing Interrupt Flags

The individual status flags, (IOCxF register bits), will be cleared by resetting them to zero. If another edge is detected during this clearing operation, the associated status flag will be set at the end of the sequence, regardless of the value actually being written.

In order to ensure that no detected edge is lost while clearing flags, only AND operations masking out known changed bits should be performed. The following sequence is an example of clearing an IOC interrupt flag using this method.

Example 20-1. Clearing Interrupt Flags (PORTA Example)

```
MOVLW    0xff
XORWF    IOCAF, W
ANDWF    IOCAF, F
```

20.6 Operation in Sleep

An interrupt-on-change interrupt event will wake the device from Sleep mode, if the IOCIE bit is set. If an edge is detected while in Sleep mode, the IOCxF register will be updated prior to the first instruction executed out of Sleep.

20.7 Register Definitions: Interrupt-on-Change Control

20.7.1 IOCxF

Name: IOCxF

Interrupt-on-Change Flag Register

Bit	7	6	5	4	3	2	1	0
	IOCxF7	IOCxF6	IOCxF5	IOCxF4	IOCxF3	IOCxF2	IOCxF1	IOCxF0
Access	R/W/HS	R/W/HS	R/W/HS	R/W/HS	R/W/HS	R/W/HS	R/W/HS	R/W/HS
Reset	0	0	0	0	0	0	0	0

Bits 0, 1, 2, 3, 4, 5, 6, 7 – IOCxFn Interrupt-on-Change Flag

Value	Condition	Description
1	IOCxP[n] = 1	A positive edge was detected on the Rx[n] pin
1	IOCxN[n] = 1	A negative edge was detected on the Rx[n] pin
0	IOCxP[n] = x and IOCxN[n] = x	No change was detected, or the user cleared the detected change

Important:

- If MCLRE = 1 or LVP = 1, the $\overline{\text{MCLR}}$ pin port functionality is disabled and IOC on that pin is not available.
- Refer to the **"Pin Allocation Table"** for details about pins with configurable IOC per port.

20.7.2 IOCxN

Name: IOCxN

Interrupt-on-Change Negative Edge Register Example

Bit	7	6	5	4	3	2	1	0
	IOCxN7	IOCxN6	IOCxN5	IOCxN4	IOCxN3	IOCxN2	IOCxN1	IOCxN0
Acccss	R/W	R/W	R/W	R/W	R/W	R/W	R/W	R/W
Reset	0	0	0	0	0	0	0	0

Bits 0, 1, 2, 3, 4, 5, 6, 7 – IOCxNn Interrupt-on-Change Negative Edge Enable

Value	Description
1	Interrupt-on-Change enabled on the IOCx pin for a negative-going edge. Associated Status bit and interrupt flag will be set upon detecting an edge.
0	Falling edge Interrupt-on-Change disabled for the associated pin

Important:

- If MCLRE = 1 or LVP = 1, the $\overline{\text{MCLR}}$ pin port functionality is disabled and IOC on that pin is not available.
- Refer to the **"Pin Allocation Table"** for details about pins with configurable IOC per port.

20.7.3 IOCxP

Name: IOCxP

Interrupt-on-Change Positive Edge Register

Bit	7	6	5	4	3	2	1	0
	IOCxP7	IOCxP6	IOCxP5	IOCxP4	IOCxP3	IOCxP2	IOCxP1	IOCxP0
Acccss	R/W	R/W	R/W	R/W	R/W	R/W	R/W	R/W
Reset	0	0	0	0	0	0	0	0

Bits 0, 1, 2, 3, 4, 5, 6, 7 – IOCxPn Interrupt-on-Change Positive Edge Enable

Value	Description
1	Interrupt-on-Change enabled on the IOCx pin for a positive-going edge. Associated Status bit and interrupt flag will be set upon detecting an edge.
0	Rising edge Interrupt-on-Change disabled for the associated pin.

Important:

- If MCLRE = 1 or LVP = 1, the $\overline{\text{MCLR}}$ pin port functionality is disabled and IOC on that pin is not available.
- Refer to the **"Pin Allocation Table"** for details about pins with configurable IOC per port.

20.8 Register Summary: Interrupt-on-Change Control

Address	Name	Bit Pos.	7	6	5	4	3	2	1	0
0x00 ... 0x0404	Reserved									
0x0405	IOCAP	7:0			IOCAP5	IOCAP4	IOCAP3	IOCAP2	IOCAP1	IOCAP0
0x0406	IOCAN	7:0			IOCAN5	IOCAN4	IOCAN3	IOCAN2	IOCAN1	IOCAN0
0x0407	IOCAF	7:0			IOCAF5	IOCAF4	IOCAF3	IOCAF2	IOCAF1	IOCAF0
0x0408 ... 0x040C	Reserved									
0x040D	IOCBP	7:0	IOCBP7	IOCBP6	IOCBP5	IOCBP4				
0x040E	IOCBN	7:0	IOCBN7	IOCBN6	IOCBN5	IOCBN4				
0x040F	IOCBF	7:0	IOCBF7	IOCBF6	IOCBF5	IOCBF4				
0x0410 ... 0x0414	Reserved									
0x0415	IOCCP	7:0	IOCCP7	IOCCP6	IOCCP5	IOCCP4	IOCCP3	IOCCP2	IOCCP1	IOCCP0
0x0416	IOCCN	7:0	IOCCN7	IOCCN6	IOCCN5	IOCCN4	IOCCN3	IOCCN2	IOCCN1	IOCCN0
0x0417	IOCCF	7:0	IOCCF7	IOCCF6	IOCCF5	IOCCF4	IOCCF3	IOCCF2	IOCCF1	IOCCF0

21. PPS - Peripheral Pin Select Module

21.1 Overview

The Peripheral Pin Select (PPS) module connects peripheral inputs and outputs to the device I/O pins. Only digital signals are included in the selections.

Important: All analog inputs and outputs remain fixed to their assigned pins and cannot be changed through PPS.

Input and output selections are independent as shown in the figure below.

Figure 21-1. PPS Block Diagram

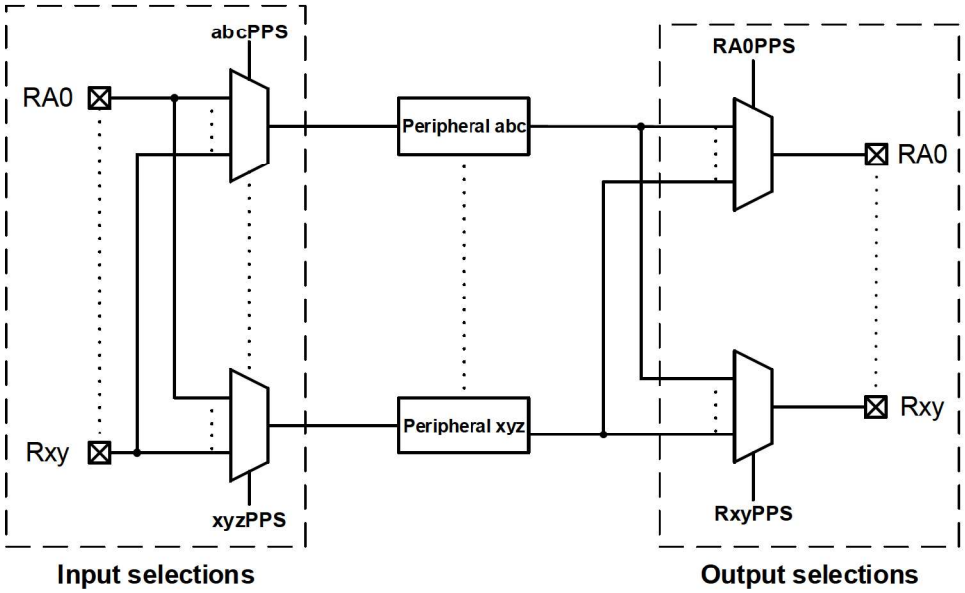

21.2 PPS Inputs

Each digital peripheral has a dedicated PPS Peripheral Input Selection (xxxPPS) register with which the input pin to the peripheral is selected. Devices that have 20 leads or less (8/14/16/20) allow PPS routing to any I/O pin, while devices with 28 leads or more allow PPS routing to I/Os contained within two ports (see the PPS Input Selection Table below).

Important: The notation “xxx” in the generic register name is a place holder for the peripheral identifier. For example, xxx = T0CKI for the T0CKIPPS register.

Multiple peripherals can operate from the same source simultaneously. Port reads always return the pin level regardless of peripheral PPS selection. If a pin also has analog functions associated, the ANSEL bit for that pin must be cleared to enable the digital input buffer.

Table 21-1. PPS Input Selection Table

Peripheral	PPS Input Register	14-Pin Devices					20-Pin Devices				
		Default Pin Selection at POR	Register Reset Value at POR	Available Input Port			Default Pin Selection at POR	Register Reset Value at POR	Available Input Port		
Interrupt 0	INT0PPS	RA2	'b000 010	A	—	C	RC0	'b010 000	A	B	C
Interrupt 1	INT1PPS	RA4	'b000 100	A	—	C	RC1	'b010 001	A	B	C
Interrupt 2	INT2PPS	RA5	'b000 101	A	—	C	RC2	'b010 010	A	B	C
Timer0 Clock	T0CKIPPS	RA2	'b000 010	A	—	C	RC5	'b010 101	A	B	C
Timer1 Clock	T1CKIPPS	RA5	'b000 101	A	—	C	RC6	'b010 110	A	B	C
Timer1 Gate	T1GPPS	RA4	'b000 100	A	—	C	RA4	'b000 100	A	B	C
Timer3 Clock	T3CKIPPS	RC5	'b010 101	A	—	C	RC5	'b010 101	A	B	C
Timer3 Gate	T3GPPS	RC4	'b010 100	A	—	C	RC4	'b010 100	A	B	C
Timer2 Input	T2INPPS	RA5	'b000 101	A	—	C	RA5	'b000 101	A	B	C
Timer4 Input	T4INPPS	RC1	'b010 001	A	—	C	RC1	'b010 001	A	B	C
CCP1	CCP1PPS	RC5	'b010 101	A	—	C	RC5	'b010 101	A	B	C
SMT1 Window	SMT1WINPPS	RA5	'b000 101	A	—	C	RA5	'b000 101	A	B	C
SMT1 Signal	SMT1SIGPPS	RC0	'b010 000	A	—	C	RA4	'b000 100	A	B	C
PWM Input 0	PWMIN0PPS	RC5	'b010 101	A	—	C	RC5	'b010 101	A	B	C
PWM Input 1	PWMIN1PPS	RC3	'b010 011	A	—	C	RC3	'b010 011	A	B	C
PWM1 External Reset Source	PWM1ERSPPS	RA5	'b000 101	A	—	C	RA5	'b000 101	A	B	C
PWM2 External Reset Source	PWM2ERSPPS	RC1	'b010 001	A	—	C	RC1	'b010 001	A	B	C
PWM3 External Reset Source	PWM3ERSPPS	RC2	'b010 010	A	—	C	RC2	'b010 010	A	B	C
CWG1	CWG1PPS	RA2	'b000 010	A	—	C	RA2	'b000 010	A	B	C
DSM1 Carrier Low	MD1CARLPPS	RC2	'b010 010	A	—	C	RC2	'b010 010	A	B	C
DSM1 Carrier High	MD1CARHPPS	RC5	'b010 101	A	—	C	RC5	'b010 101	A	B	C
DSM1 Source	MD1SRCPPS	RA1	'b000 001	A	—	C	RA1	'b000 001	A	B	C
CLCx Input 1	CLCIN0PPS	RC3	'b010 011	A	—	C	RA2	'b000 010	A	B	C
CLCx Input 2	CLCIN1PPS	RC4	'b010 100	A	—	C	RC3	'b010 011	A	B	C
CLCx Input 3	CLCIN2PPS	RC1	'b010 001	A	—	C	RB4	'b001 100	A	B	C
CLCx Input 4	CLCIN3PPS	RA4	'b000 100	A	—	C	RB5	'b001 101	A	B	C
ADC Conversion Trigger	ADACTPPS	RC2	'b010 010	A	—	C	RC2	'b010 010	A	B	C
SPI1 Clock	SPI1SCKPPS	RC0	'b010 000	A	—	C	RB6	'b001 110	A	B	C
SPI1 Data	SPI1SDIPPS	RC1	'b010 001	A	—	C	RB4	'b001 100	A	B	C
SPI1 Slave Select	SPI1SSPPS	RC3	'b010 011	A	—	C	RC6	'b010 110	A	B	C

.....continued

Peripheral	PPS Input Register	14-Pin Devices					20-Pin Devices				
		Default Pin Selection at POR	Register Reset Value at POR	Available Input Port			Default Pin Selection at POR	Register Reset Value at POR	Available Input Port		
SPI2 Clock	SPI2SCKPPS	RC4	'b010 100	A	—	C	RB7	'b001 111	A	B	C
SPI2 Data	SPI2SDIPPS	RC5	'b010 101	A	—	C	RB5	'b001 101	A	B	C
SPI2 Slave Select	SPI2SSPPS	RA0	'b000 000	A	—	C	RA1	'b000 001	A	B	C
I2C1 Clock	I2C1SCLPPS(1)	RC0	'b010 000	A	—	C	RB6	'b001 110	A	B	C
I2C1 Data	I2C1SDAPPS(1)	RC1	'b010 001	A	—	C	RB4	'b001 100	A	B	C
UART1 Receive	U1RXPPS	RC5	'b010 101	A	—	C	RB5	'b001 101	A	B	C
UART1 Clear to Send	U1CTSPPS	RC4	'b010 100	A	—	C	RB7	'b001 111	A	B	C
UART2 Receive	U2RXPPS	RC1	'b010 001	A	—	C	RC1	'b010 001	A	B	C
UART2 Clear to Send	U2CTSPPS	RC2	'b010 010	A	—	C	RC2	'b010 010	A	B	C
UART3 Receive	U3RXPPS	RA4	'b000 100	A	—	C	RC3	'b010 011	A	B	C
UART3 Clear to Send	U3CTSPPS	RA5	'b000 101	A	—	C	RC5	'b010 101	A	B	C

Note:

1. Bidirectional pin. The corresponding output must select the same pin.

21.3 PPS Outputs

Each digital peripheral has a dedicated Pin Rxy Output Source Selection (RxyPPS) register with which the pin output source is selected. With few exceptions, the port TRIS control associated with that pin retains control over the pin output driver. Peripherals that control the pin output driver as part of the peripheral operation will override the TRIS control as needed. The I^2C module is an example of such a peripheral.

Important: The notation 'Rxy' is a place holder for the pin identifier. The 'x' holds the place of the PORT letter and the 'y' holds the place of the bit number. For example, Rxy = RA0 for the RA0PPS register.

The PPS Output Selection Table below shows the output codes for each peripheral, as well as the available Port selections.

Table 21-2. PPS Output Selection Table

RxyPPS	Output Source	Available Output Ports					
		14-Pin Devices			20-Pin Devices		
0x28	ADGRDB	A	—	C	A	B	C
0x27	ADGRDA	A	—	C	A	B	C
0x26	DSM1	A	—	C	A	B	C
0x25	CLKR	A	—	C	A	B	C
0x24	NCO1	A	—	C	A	B	C
0x23	TMR0	A	—	C	A	B	C

.....continued

RxyPPS	Output Source	Available Output Ports					
		14-Pin Devices			20-Pin Devices		
0x22	I2C1 SDA(1)	A	—	C	A	B	C
0x21	I2C1 SCL(1)	A	—	C	A	B	C
0x20	SPI2 SS	A	—	C	A	B	C
0x1F	SPI2 SDO	A	—	C	A	B	C
0x1E	SPI2 SCK	A	—	C	A	B	C
0x1D	SPI1 SS	A	—	C	A	B	C
0x1C	SPI1 SDO	A	—	C	A	B	C
0x1B	SPI1 SCK	A	—	C	A	B	C
0x1A	C2OUT	A	—	C	A	B	C
0x19	C1OUT	A	—	C	A	B	C
0x18	UART3 RTS	A	—	C	A	B	C
0x17	UART3 TXDE	A	—	C	A	B	C
0x16	UART3 TX	A	—	C	A	B	C
0x15	UART2 RTS	A	—	C	A	B	C
0x14	UART2 TXDE	A	—	C	A	B	C
0x13	UART2 TX	A	—	C	A	B	C
0x12	UART1 RTS	A	—	C	A	B	C
0x11	UART1 TXDE	A	—	C	A	B	C
0x10	UART1 TX	A	—	C	A	B	C
0x0F	PWM3S1P2_OUT	A	—	C	A	B	C
0x0E	PWM3S1P1_OUT	A	—	C	A	B	C
0x0D	PWM2S1P2_OUT	A	—	C	A	B	C
0x0C	PWM2S1P1_OUT	A	—	C	A	B	C
0x0B	PWM1S1P2_OUT	A	—	C	A	B	C
0x0A	PWM1S1P1_OUT	A	—	C	A	B	C
0x09	CCP1	A	—	C	A	B	C
0x08	CWG1D	A	—	C	A	B	C
0x07	CWG1C	A	—	C	A	B	C
0x06	CWG1B	A	—	C	A	B	C
0x05	CWG1A	A	—	C	A	B	C
0x04	CLC4OUT	A	—	C	A	B	C
0x03	CLC3OUT	A	—	C	A	B	C
0x02	CLC2OUT	A	—	C	A	B	C
0x01	CLC1OUT	A	—	C	A	B	C
0x00	LATxy	A	—	C	A	B	C

Note:

1. Bidirectional pin. The corresponding input must select the same pin.

21.4 Bidirectional Pins

PPS selections for peripherals with bidirectional signals on a single pin must be made so that the PPS input and PPS output select the same pin. The I^2C Serial Clock (SCL) and Serial Data (SDA) are examples of such pins.

Important: The I^2C default pins, and a limited number of other alternate pins, are I^2C and SMBus compatible. SDA and SCL signals can be routed to any pin; however, pins without I^2C compatibility will operate at standard TTL/ST logic levels as selected by the port's INLVL register.

21.5 PPS Lock

The PPS module provides an extra layer of protection to prevent inadvertent changes to the PPS selection registers. The PPSLOCKED bit is used in combination with specific code execution blocks to lock/unlock the PPS selection registers.

Important: The PPSLOCKED bit is clear by default (PPSLOCKED = 0), which allows the PPS selection registers to be modified without an unlock sequence.

PPS selection registers are locked when the PPSLOCKED bit is set (PPSLOCKED = 1). Setting the PPSLOCKED bit requires a specific lock sequence as shown in the examples below in both C and assembly languages.

PPS selection registers are unlocked when the PPSLOCKED bit is clear (PPSLOCKED = 0). Clearing the PPSLOCKED bit requires a specific unlock sequence as shown in the examples below in both C and assembly languages.

Important: All interrupts should be disabled before starting the lock/unlock sequence to ensure proper execution.

Example 21-1. ***PPS Lock Sequence (Assembly language)***

```
; suspend interrupts
   BCF      INTCON0,GIE
   BANKSEL  PPSLOCK
; required sequence, next 5 instructions
   MOVLW    0x55
   MOVWF    PPSLOCK
   MOVLW    0xAA
   MOVWF    PPSLOCK
; Set PPSLOCKED bit
   BSF      PPSLOCK,PPSLOCKED
; restore interrupts
   BSF      INTCON0,GIE
```

Example 21-2. ***PPS Lock Sequence (C language)***

```
INTCON0bits.GIE = 0;         //Suspend interrupts
PPSLOCK = 0x55;              //Required sequence
PPSLOCK = 0xAA;              //Required sequence
PPSLOCKbits.PPSLOCKED = 1;   //Set PPSLOCKED bit
INTCON0bits.GIE = 1;         //Restore interrupts
```

Example 21-3. ***PPS Unlock Sequence (Assembly language)***

```
; suspend interrupts
   BCF      INTCON0,GIE
```

```
    BANKSEL  PPSLOCK
; required sequence, next 5 instructions
    MOVLW    0x55
    MOVWF    PPSLOCK
    MOVLW    0xAA
    MOVWF    PPSLOCK
; Clear PPSLOCKED bit
    BCF      PPSLOCK,PPSLOCKED
; restore interrupts
    BSF      INTCON0,GIE
```

Example 21-4. ***PPS Unlock Sequence (C language)***

```
INTCON0bits.GIE = 0;          //Suspend interrupts
PPSLOCK = 0x55;               //Required sequence
PPSLOCK = 0xAA;               //Required sequence
PPSLOCKbits.PPSLOCKED = 0;    //Clear PPSLOCKED bit
INTCON0bits.GIE = 1;          //Restore interrupts
```

21.5.1 PPS One-Way Lock

The PPS1WAY Configuration bit can also be used to prevent inadvertent modification to the PPS selection registers.

When the PPS1WAY bit is set (PPS1WAY = 1), the PPSLOCKED bit can only be set one time after a device Reset. Once the PPSLOCKED bit has been set, it cannot be cleared again unless a device Reset is executed.

When the PPS1WAY bit is clear (PPS1WAY = 0), the PPSLOCKED bit can be set or cleared as needed; however, the PPS lock/unlock sequences must be executed.

21.6 Operation During Sleep

PPS input and output selections are unaffected by Sleep.

21.7 Effects of a Reset

A device Power-on Reset (POR) or Brown-out Reset (BOR) returns all PPS input selection registers to their default values, and clears all PPS output selection registers. All other Resets leave the selections unchanged. Default input selections are shown in the PPS input register details table. The PPSLOCKED bit is cleared in all Reset conditions.

21.8 Register Definitions: Peripheral Pin Select (PPS)

21.8.1 xxxPPS

Name: xxxPPS

Peripheral Input Selection Register

Bit	7	6	5	4	3	2	1	0
			PORT[2:0]			PIN[2:0]		
Acccss			R/W	R/W	R/W	R/W	R/W	R/W
Reset			m	m	m	m	m	m

Bits 5:3 – PORT[2:0] Peripheral Input PORT Selection(1)
See the PPS Input Selection Table for the list of available Ports and default pin locations.
Reset States: POR = mmm
All other Resets = uuu

Value	Description
010	PORTC
001	PORTB
000	PORTA

Bits 2:0 – PIN[2:0] Peripheral Input PORT Pin Selection(2)
Reset States: POR = mmm
All other Resets = uuu

Value	Description
111	Peripheral input is from PORTx Pin 7 (Rx7)
110	Peripheral input is from PORTx Pin 6 (Rx6)
101	Peripheral input is from PORTx Pin 5 (Rx5)
100	Peripheral input is from PORTx Pin 4 (Rx4)
011	Peripheral input is from PORTx Pin 3 (Rx3)
010	Peripheral input is from PORTx Pin 2 (Rx2)
001	Peripheral input is from PORTx Pin 1 (Rx1)
000	Peripheral input is from PORTx Pin 0 (Rx0)

Notes:

1. The Reset value ‘m’ is determined by device default locations for that input.
2. Refer to the Pin Allocation Table for details about available pins per port.

21.8.2 RxyPPS

Name: RxyPPS

Pin Rxy Output Source Selection Register

Bit	7	6	5	4	3	2	1	0
		RxyPPS[6:0]						
Acccss		R/W	R/W	R/W	R/W	R/W	R/W	R/W
Reset		0	0	0	0	0	0	0

Bits 6:0 – RxyPPS[6:0] Pin Rxy Output Source Selection
See the PPS Output Selection Table for the list of RxyPPS Output Source codes
Reset States: POR = 0000000
All other Resets = uuuuuuu

21.8.3 PPSLOCK

Name: PPSLOCK

PPS Lock Register

Bit	7	6	5	4	3	2	1	0
								PPSLOCKED
Access								R/W
Reset								0

Bit 0 – PPSLOCKED PPS Locked
Reset States: POR = 0
All other Resets = 0

Value	Description
1	PPS is locked. PPS selections cannot be changed. Writes to any PPS register are ignored.
0	PPS is not locked. PPS selections can be changed, but may require the PPS lock/unlock sequence.

21.9 Register Summary: Peripheral Pin Select Module

Address	Name	Bit Pos.	7	6	5	4	3	2	1	0
0x00 ... 0x01FF	Reserved									
0x0200	PPSLOCK	7:0								PPSLOCKED
0x0201	RA0PPS	7:0			RA0PPS[5:0]					
0x0202	RA1PPS	7:0			RA1PPS[5:0]					
0x0203	RA2PPS	7:0			RA2PPS[5:0]					
0x0204	Reserved									
0x0205	RA4PPS	7:0			RA4PPS[5:0]					
0x0206	RA5PPS	7:0			RA5PPS[5:0]					
0x0207 ... 0x020C	Reserved									
0x020D	RB4PPS	7:0			RB4PPS[5:0]					
0x020E	RB5PPS	7:0			RB5PPS[5:0]					
0x020F	RB6PPS	7:0			RB6PPS[5:0]					
0x0210	RB7PPS	7:0			RB7PPS[5:0]					
0x0211	RC0PPS	7:0			RC0PPS[5:0]					
0x0212	RC1PPS	7:0			RC1PPS[5:0]					
0x0213	RC2PPS	7:0			RC2PPS[5:0]					
0x0214	RC3PPS	7:0			RC3PPS[5:0]					
0x0215	RC4PPS	7:0			RC4PPS[5:0]					
0x0216	RC5PPS	7:0			RC5PPS[5:0]					
0x0217	RC6PPS	7:0			RC6PPS[5:0]					
0x0218	RC7PPS	7:0			RC7PPS[5:0]					
0x0219 ... 0x023D	Reserved									
0x023E	INT0PPS	7:0					PORT	PIN[2:0]		
0x023F	INT1PPS	7:0				PORT[1:0]		PIN[2:0]		
0x0240	INT2PPS	7:0			PORT[2:0]			PIN[2:0]		
0x0241	T0CKIPPS	7:0			PORT[2:0]			PIN[2:0]		
0x0242	T1CKIPPS	7:0			PORT[2:0]			PIN[2:0]		
0x0243	T1GPPS	7:0			PORT[2:0]			PIN[2:0]		
0x0244	T3CKIPPS	7:0			PORT[2:0]			PIN[2:0]		
0x0245	T3GPPS	7:0			PORT[2:0]			PIN[2:0]		
0x0246 ... 0x0247	Reserved									
0x0248	T2INPPS	7:0			PORT[2:0]			PIN[2:0]		
0x0249	T4INPPS	7:0			PORT[2:0]			PIN[2:0]		
0x024A ... 0x024E	Reserved									
0x024F	CCP1PPS	7:0			PORT[2:0]			PIN[2:0]		
0x0250	Reserved									
0x0251	PWM1ERSPPS	7:0				PORT[1:0]		PIN[2:0]		
0x0252	PWM2ERSPPS	7:0			PORT[2:0]			PIN[2:0]		
0x0253	PWM3ERSPPS	7:0				PORT[1:0]		PIN[2:0]		
0x0254 ... 0x0256	Reserved									
0x0257	PWMIN0PPS	7:0			PORT[2:0]			PIN[2:0]		
0x0258	PWMIN1PPS	7:0			PORT[2:0]			PIN[2:0]		
0x0259	SMT1WINPPS	7:0			PORT[2:0]			PIN[2:0]		
0x025A	SMT1SIGPPS	7:0			PORT[2:0]			PIN[2:0]		

.....continued

Address	Name	Bit Pos.	7	6	5	4	3	2	1	0
0x025B	CWGxPPS	7:0			PORT[2:0]			PIN[2:0]		
0x025C ... 0x025D	Reserved									
0x025E	MD1CARLPPS	7:0			PORT[2:0]			PIN[2:0]		
0x025F	MD1CARHPPS	7:0			PORT[2:0]			PIN[2:0]		
0x0260	MD1SRCPPS	7:0			PORT[2:0]			PIN[2:0]		
0x0261	CLCIN0PPS	7:0			PORT[2:0]			PIN[2:0]		
0x0262	CLCIN1PPS	7:0			PORT[2:0]			PIN[2:0]		
0x0263	CLCIN2PPS	7:0			PORT[2:0]			PIN[2:0]		
0x0264	CLCIN3PPS	7:0			PORT[2:0]			PIN[2:0]		
0x0265 ... 0x0268	Reserved									
0x0269	ADACTPPS	7:0			PORT[2:0]			PIN[2:0]		
0x026A	SPI1SCKPPS	7:0			PORT[2:0]			PIN[2:0]		
0x026B	SPI1SDIPPS	7:0			PORT[2:0]			PIN[2:0]		
0x026C	SPI1SSPPS	7:0			PORT[2:0]			PIN[2:0]		
0x026D	SPI2SCKPPS	7:0			PORT[2:0]			PIN[2:0]		
0x026E	SPI2SDIPPS	7:0			PORT[2:0]			PIN[2:0]		
0x026F	SPI2SSPPS	7:0			PORT[2:0]			PIN[2:0]		
0x0270	I2C1SDAPPS	7:0			PORT[2:0]			PIN[2:0]		
0x0271	I2C1SCLPPS	7:0			PORT[2:0]			PIN[2:0]		
0x0272	U1RXPPS	7:0				PORT[1:0]		PIN[2:0]		
0x0273	U1CTSPPS	7:0				PORT[1:0]		PIN[2:0]		
0x0274	UxRXPPS	7:0					PORT	PIN[2:0]		
0x0275	UxCTSPPS	7:0					PORT	PIN[2:0]		
0x0276	U3RXPPS	7:0				PORT[1:0]		PIN[2:0]		
0x0277	U3CTSPPS	7:0				PORT[1:0]		PIN[2:0]		

22. CLC - Configurable Logic Cell

The Configurable Logic Cell (CLC) module provides programmable logic that operates outside the speed limitations of software execution. The logic cell takes up to 256 input signals and, through the use of configurable gates, reduces those inputs to four logic lines that drive one of eight selectable single-output logic functions.

Input sources are a combination of the following:

- I/O pins
- Internal clocks
- Peripherals
- Register bits

The output can be directed internally to peripherals and to an output pin.

The following figure is a simplified diagram showing signal flow through the CLC. Possible configurations include:

- Combinatorial Logic
  - AND
  - NAND
  - AND-OR
  - AND-OR-INVERT
  - OR-XOR
  - OR-XNOR
- Latches
  - SR
  - Clocked D with Set and Reset
  - Transparent D with Set and Reset

Figure 22-1. CLC Simplified Block Diagram

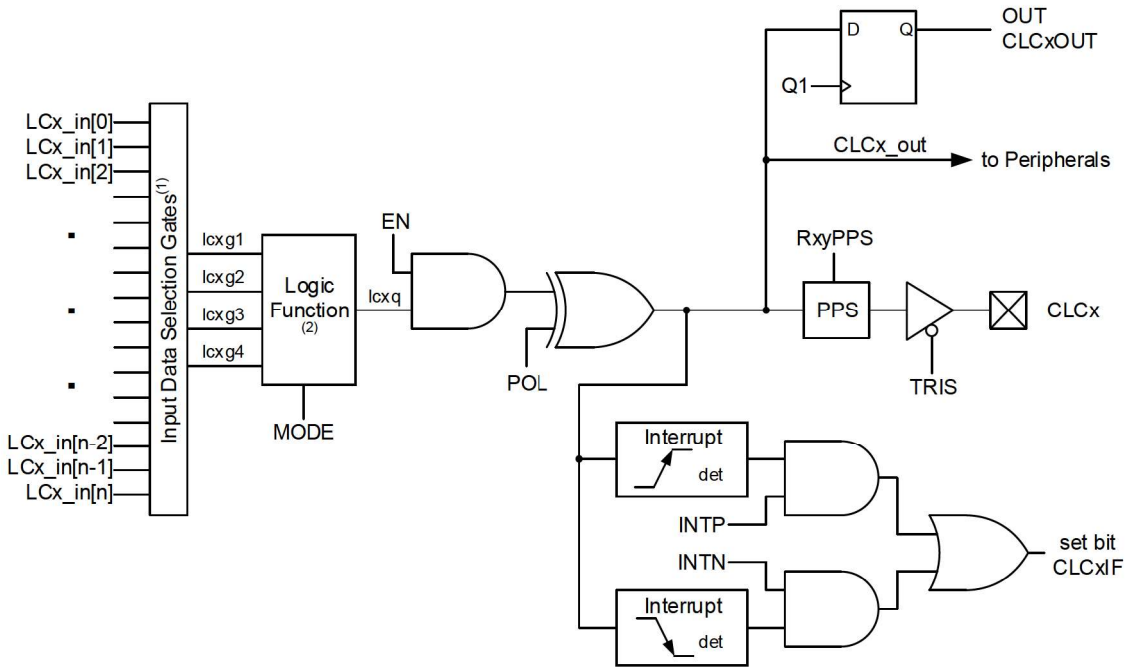

Notes:

1. See Figure 22-2 for input data selection and gating.
2. See Figure 22-3 for programmable logic functions.

22.1 CLC Setup

Programming the CLC module is performed by configuring the four stages in the logic signal flow. The four stages are:

- Data selection
- Data gating
- Logic function selection
- Output polarity

Each stage is set up at run time by writing to the corresponding CLC Special Function Registers. This has the added advantage of permitting logic reconfiguration on-the-fly during program execution.

22.1.1 Data Selection

Data inputs are selected with CLCnSEL0 through CLCnSEL3 registers.

Important: Data selections are undefined at power-up.

Depending on the number of bits implemented in the CLCnSELy registers, there can be as many as 256 sources available as inputs to the configurable logic. Four multiplexers are used to independently select these inputs to pass on to the next stage as indicated on the left side of the following diagram.

Data inputs in the figure are identified by a generic numbered input name.

Figure 22-2. Input Data Selection and Gating

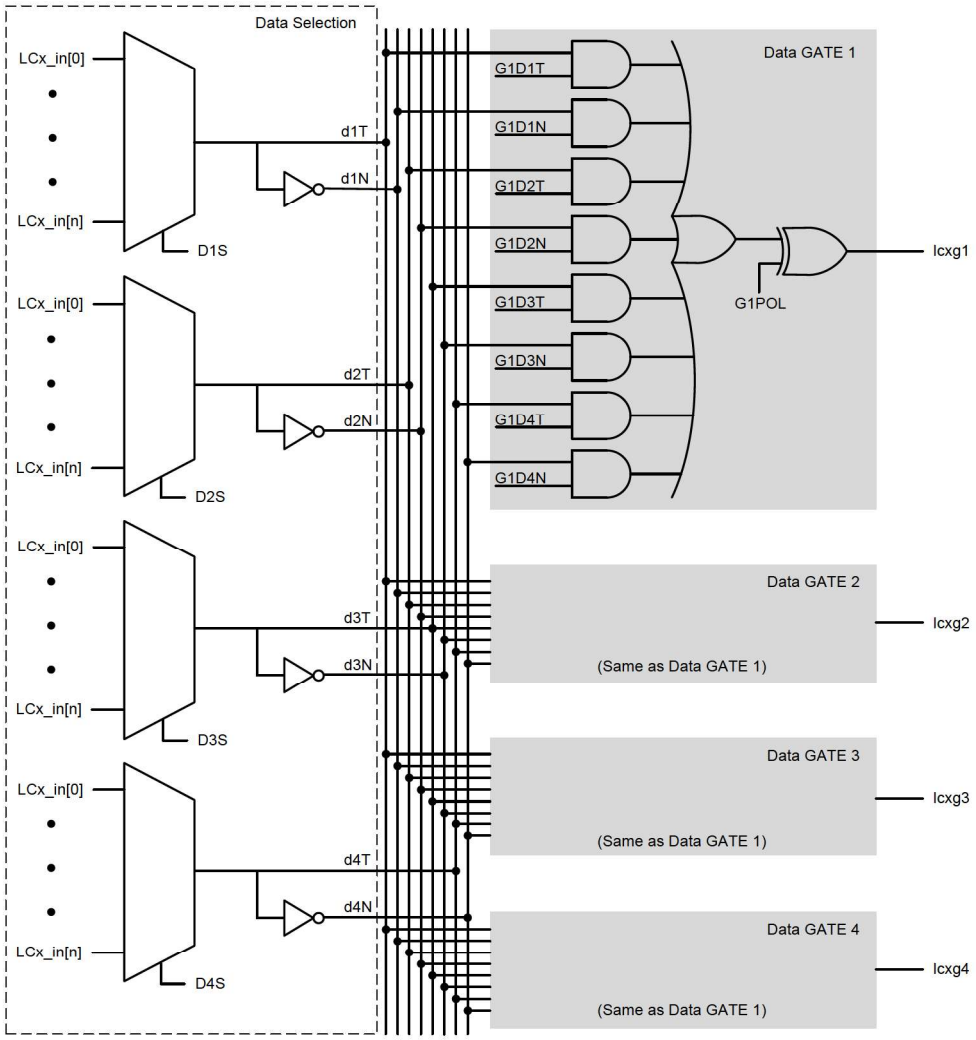

Note: All controls are undefined at power-up

The CLC Input Selection table correlates the generic input name to the actual signal for each CLC module. The table column labeled 'DyS Value' indicates the MUX selection code for the selected data input. DyS is an abbreviation for the MUX select input codes, D1S through D4S, where 'y' is the gate number.

22.1.2 Data Gating

Outputs from the input multiplexers are directed to the desired logic function input through the data gating stage. Each data gate can direct any combination of the four selected inputs.

The gate stage is more than just signal direction. The gate can be configured to direct each input signal as inverted or noninverted data. Directed signals are ANDed together in each gate. The output of each gate can be inverted before going on to the logic function stage.

The gating is in essence a 1-to-4 input AND/NAND/OR/ NOR gate. When every input is inverted and the output is inverted, the gate is an AND of all enabled data inputs. When the inputs and output are not inverted, the gate is an OR or all enabled inputs.

Table 22-1 summarizes the basic logic that can be obtained in gate 1 by using the gate logic select bits. The table shows the logic of four input variables, but each gate can be configured to use less than four. If no inputs are selected, the output will be '0' or '1', depending on the gate output polarity bit.

Table 22-1. Data Gating Logic

CLCnGLSy	GyPOL	Gate Logic
0x55	1	AND
0x55	0	NAND
0xAA	1	NOR
0xAA	0	OR
0x00	0	Logic 0
0x00	1	Logic 1

It is possible (but not recommended) to select both the true and negated values of an input. When this is done, the gate output is '0', regardless of the other inputs, but may emit logic glitches (transient-induced pulses). If the output of the channel must be '0' or '1', the recommended method is to set all gate bits to '0' and use the gate polarity bit to set the desired level.

Data gating is configured with the logic gate select registers as follows:

- Gate 1: CLCnGLS0
- Gate 2: CLCnGLS1
- Gate 3: CLCnGLS2
- Gate 4: CLCnGLS3

Note: Register number suffixes are different than the gate numbers because other variations of this module have multiple gate selections in the same register.

Data gating is indicated in the right side of Figure 22-2. Only one gate is shown in detail. The remaining three gates are configured identically with the exception that the data enables correspond to the enables for that gate.

22.1.3 Logic Function

There are eight available logic functions including:

- AND-OR
- OR-XOR
- AND
- SR Latch
- D Flip-Flop with Set and Reset
- D Flip-Flop with Reset
- J-K Flip-Flop with Reset
- Transparent Latch with Set and Reset

Logic functions are shown in the following diagram. Each logic function has four inputs and one output. The four inputs are the four data gate outputs of the previous stage. The output is fed to the inversion stage and from there to other peripherals, an output pin, and back to the CLC itself.

Figure 22-3. Programmable Logic Functions

Rev. 10-000122B
9/13/2016

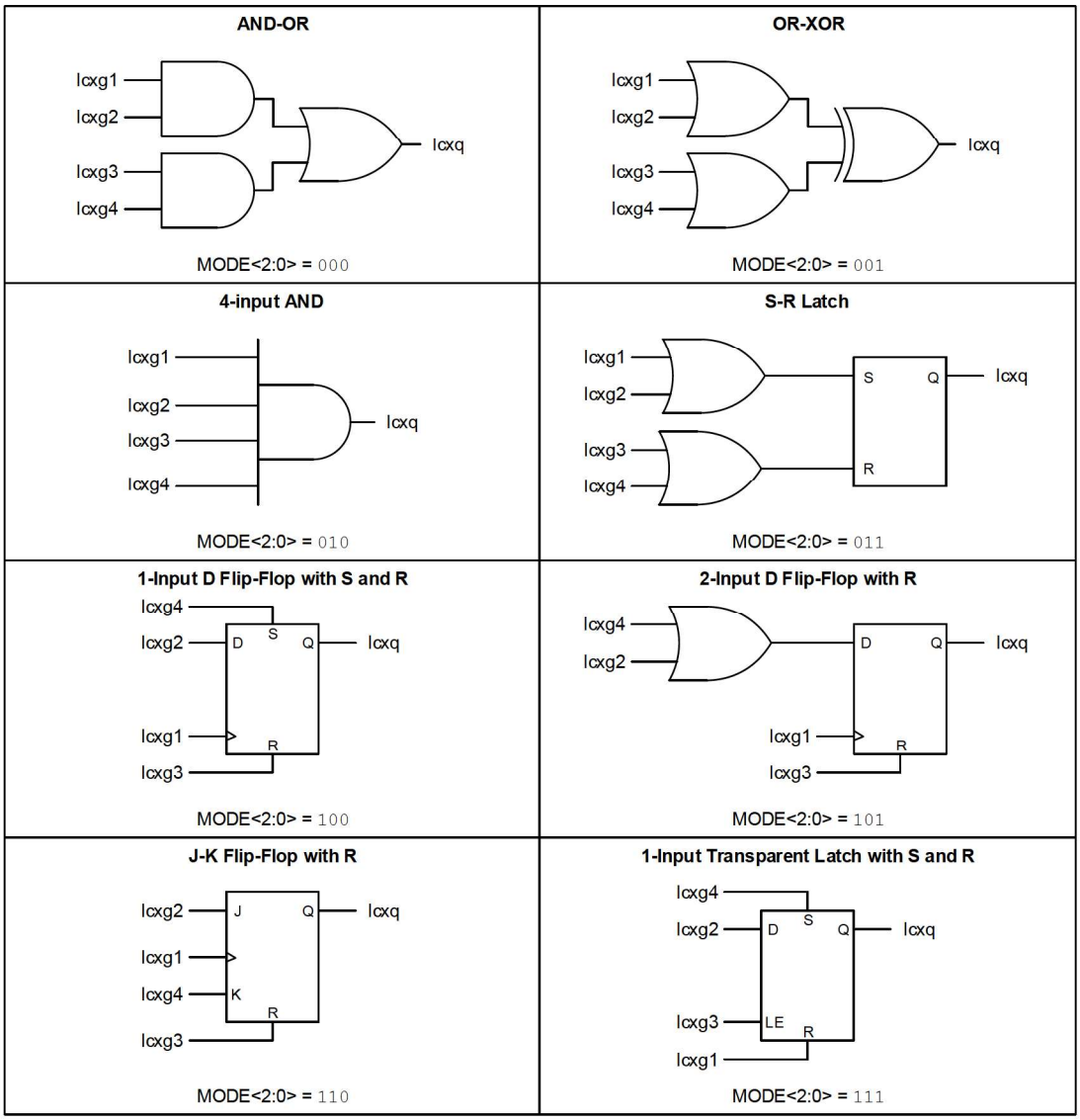

22.1.4 Output Polarity

The last stage in the Configurable Logic Cell is the output polarity. Setting the POL bit inverts the output signal from the logic stage. Changing the polarity while the interrupts are enabled will cause an interrupt for the resulting output transition.

22.2 CLC Interrupts

An interrupt will be generated upon a change in the output value of the CLCx when the appropriate interrupt enables are set. A rising edge detector and a falling edge detector are present in each CLC for this purpose.

The CLCxIF bit of the associated PIR register will be set when either edge detector is triggered and its associated enable bit is set. The INTP bit enables rising edge interrupts and the INTN bit enables falling edge interrupts.

To fully enable the interrupt, set the following bits:

- CLCxIE bit of the respective PIE register
- INTP bit (for a rising edge detection)
- INTN bit (for a falling edge detection)

If priority interrupts are not used:

1. Clear the IPEN bit of the INTCON register.
2. Set the GIE bit of the INTCON register.
3. Set the GIEL bit of the INTCON register.

If the CLC is a high priority interrupt:

1. Set the IPEN bit of the INTCON register.
2. Set the CLCxIP bit of the respective IPR register.
3. Set the GIEH bit of the INTCON register.

If the CLC is a low priority interrupt:

1. Set the IPEN bit of the INTCON register.
2. Clear the CLCxIP bit of the respective IPR register.
3. Set the GIEL bit of the INTCON register.

The CLCxIF bit of the respective PIR register must be cleared in software as part of the interrupt service. If another edge is detected while this flag is being cleared, the flag will still be set at the end of the sequence.

22.3 Effects of a Reset

The CLCnCON register is cleared to '0' as the result of a Reset. All other selection and gating values remain unchanged.

22.4 Output Mirror Copies

Mirror copies of all CLCxOUT bits are contained in the CLCDATA register. Reading this register reads the outputs of all CLCs simultaneously. This prevents any reading skew introduced by testing or reading the OUT bits in the individual CLCnCON registers.

22.5 Operation During Sleep

The CLC module operates independently from the system clock and will continue to run during Sleep, provided that the input sources selected remain active.

The HFINTOSC remains active during Sleep when the CLC module is enabled and the HFINTOSC is selected as an input source, regardless of the system clock source selected.

In other words, if the HFINTOSC is simultaneously selected as both the system clock and as a CLC input source then, when the CLC is enabled, the CPU will go idle during Sleep, but the CLC will continue to operate and the HFINTOSC will remain active. This will have a direct effect on the Sleep mode current.

22.6 CLC Setup Steps

The following steps should be followed when setting up the CLC:

1. Disable CLC by clearing the EN bit.
2. Select desired inputs using the CLCnSEL0 through CLCnSEL3 registers.
3. Clear any ANSEL bits associated with CLC input pins.
4. Set all TRIS bits associated with inputs. However, a CLC input will also operate if the pin is configured as an output, in which case the TRIS bits should be cleared.

5. Enable the chosen inputs through the four gates using the CLCnGLS0 through CLCnGLS3 registers.
6. Select the gate output polarities with the GyPOL bits.
7. Select the desired logic function with the MODE bits.
8. Select the desired polarity of the logic output with the POL bit. (This step may be combined with the previous gate output polarity step).
9. If driving a device pin, configure the associated pin PPS control register and also clear the TRIS bit corresponding to that output.
10. Configure the interrupts (optional). See CLC Interrupts.
11. Enable the CLC by setting the EN bit.

22.7 Register Overlay

All CLCs in this device share the same set of registers. Only one CLC instance is accessible at a time. The value in the CLCSELECT register is one less than the selected CLC instance. For example, a CLCSELECT value of 0 selects CLC1.

22.8 Register Definitions: Configurable Logic Cell

22.8.1 CLCSELECT

Name: CLCSELECT
Address: 0x0D5

CLC Instance Selection Register

Selects which CLC instance is accessed by the CLC registers

Bit	7	6	5	4	3	2	1	0
							SLCT[1:0]	
Access							R/W	R/W
Reset							0	0

Bits 1:0 – SLCT[1:0] CLC instance selection

Value	Description
n	Shared CLC registers of instance n+1 are selected for read and write operations.

22.8.2 CLCnCON

Name: CLCnCON
Address: 0x0D6

Configurable Logic Cell Control Register

Bit	7	6	5	4	3	2	1	0
	EN		OUT	INTP	INTN	MODE[2:0]		
Access	R/W		R	R/W	R/W	R/W	R/W	R/W
Reset	0		0	0	0	0	0	0

Bit 7 – EN CLC Enable

Value	Description
1	Configurable logic cell is enabled and mixing signals
0	Configurable logic cell is disabled and has logic zero output

Bit 5 – OUT Logic cell output data, after LCPOL. Sampled from CLCxOUT

Bit 4 – INTP Configurable Logic Cell Positive Edge Going Interrupt Enable

Value	Description
1	CLCxIF will be set when a rising edge occurs on CLCxOUT
0	Rising edges on CLCxOUT have no effect on CLCxIF

Bit 3 – INTN Configurable Logic Cell Negative Edge Going Interrupt Enable

Value	Description
1	CLCxIF will be set when a falling edge occurs on CLCxOUT
0	Falling edges on CLCxOUT have no effect on CLCxIF

Bits 2:0 – MODE[2:0] Configurable Logic Cell Functional Mode Selection

Value	Description
111	Cell is 1-input transparent latch with Set and Reset
110	Cell is J-K flip-flop with Reset
101	Cell is 2-input D flip-flop with Reset
100	Cell is 1-input D flip-flop with Set and Reset
011	Cell is SR latch
010	Cell is 4-input AND
001	Cell is OR-XOR
000	Cell is AND-OR

22.8.3 CLCnPOL

Name: CLCnPOL
Address: 0x0D7

Signal Polarity Control Register

Bit	7	6	5	4	3	2	1	0
	POL				G4POL	G3POL	G2POL	G1POL
Access	R/W				R/W	R/W	R/W	R/W
Reset	0				x	x	x	x

Bit 7 – POL CLCxOUT Output Polarity Control

Value	Description
1	The output of the logic cell is inverted
0	The output of the logic cell is not inverted

Bits 0, 1, 2, 3 – GyPOL Gate Output Polarity Control
Reset States: POR/BOR = xxxx
All Other Resets = uuuu

Value	Description
1	The gate output is inverted when applied to the logic cell
0	The output of the gate is not inverted

22.8.4 CLCnSEL0

Name: CLCnSEL0
Address: 0x0D8

Generic CLCn Data 1 Select Register

Bit	7	6	5	4	3	2	1	0
		D1S[6:0]						
Access		R/W	R/W	R/W	R/W	R/W	R/W	R/W
Reset		x	x	x	x	x	x	x

Bits 6:0 – D1S[6:0] CLCn Data1 Input Selection

Table 22-2. CLC Input Selection

DyS	Input Source	DyS (cont.)	Input Source (cont.)
[0] 0000 0000	CLCIN0PPS	[26] 0001 1010	PWM3S1P2_OUT
[1] 0000 0001	CLCIN1PPS	[27] 0001 1011	NCO1
[2] 0000 0010	CLCIN2PPS	[28] 0001 1100	CMP1_OUT
[3] 0000 0011	CLCIN3PPS	[29] 0001 1101	CMP2_OUT
[4] 0000 0100	FOSC	[30] 0001 1110	ZCD
[5] 0000 0101	HFINTOSC(1)	[31] 0001 1111	IOC
[6] 0000 0110	LFINTOSC(1)	[32] 0010 0000	DSM1
[7] 0000 0111	MFINTOSC(1)	[33] 0010 0001	HLVD_OUT
[8] 0000 1000	MFINTOSC (32 kHz)(1)	[34] 0010 0010	CLC1
[9] 0000 1001	SFINTOSC (1 MHz)(1)	[35] 0010 0011	CLC2
[10] 0000 1010	SOSC(1)	[36] 0010 0100	CLC3
[11] 0000 1011	EXTOSC(1)	[37] 0010 0101	CLC4
[12] 0000 1100	ADCRC(1)	[38] 0010 0110	U1TX
[13] 0000 1101	CLKR	[39] 0010 0111	U2TX
[14] 0000 1110	TMR0	[40] 0010 1000	U3TX
[15] 0000 1111	TMR1	[41] 0010 1001	SPI1_SDO
[16] 0001 0000	TMR2	[42] 0010 1010	SPI1_SCK
[17] 0001 0001	TMR3	[43] 0010 1011	SPI1_SS
[18] 0001 0010	TMR4	[44] 0010 1100	SPI2_SDO
[19] 0001 0011	SMT1	[45] 0010 1101	SPI2_SCK
[20] 0001 0100	CCP1	[46] 0010 1110	SPI2_SS
[21] 0001 0101	PWM1S1P1_OUT	[47] 0010 1111	I2C_SCL
[22] 0001 0110	PWM1S1P2_OUT	[48] 0011 0000	I2C_SDA
[23] 0001 0111	PWM2S1P1_OUT	[49] 0011 0001	CWG1A
[24] 0001 1000	PWM2S1P2_OUT	[50] 0011 0010	CWG1B
[25] 0001 1001	PWM3S1P1_OUT	[51] 0011 0011	-

Note:
1. Requests clock.

Reset States: POR/BOR = xxxxxxx
All Other Resets = uuuuuuu

22.8.5 CLCnSEL1

Name: CLCnSEL1
Address: 0x0D9

Generic CLCn Data 1 Select Register

Bit	7	6	5	4	3	2	1	0
		D2S[6:0]						
Access		R/W	R/W	R/W	R/W	R/W	R/W	R/W
Reset		x	x	x	x	x	x	x

Bits 6:0 – D2S[6:0] CLCn Data2 Input Selection
Reset States: POR/BOR = xxxxxxx
All Other Resets = uuuuuuu

Value	Description
n	Refer to the CLC Input Selection table for input selections.

22.8.6 CLCnSEL2

Name: CLCnSEL2
Address: 0x0DA

Generic CLCn Data 1 Select Register

Bit	7	6	5	4	3	2	1	0
		D3S[6:0]						
Access		R/W	R/W	R/W	R/W	R/W	R/W	R/W
Reset		x	x	x	x	x	x	x

Bits 6:0 – D3S[6:0] CLCn Data3 Input Selection
Reset States: POR/BOR = xxxxxxx
All Other Resets = uuuuuuu

Value	Description
n	Refer to the CLC Input Selection table for input selections.

22.8.7 CLCnSEL3

Name: CLCnSEL3
Address: 0x0DB

Generic CLCn Data 4 Select Register

Bit	7	6	5	4	3	2	1	0
		D4S[6:0]						
Access		R/W	R/W	R/W	R/W	R/W	R/W	R/W
Reset		x	x	x	x	x	x	x

Bits 6:0 – D4S[6:0] CLCn Data4 Input Selection
Reset States: POR/BOR = xxxxxxx
All Other Resets = uuuuuuu

Value	Description
n	Refer to the CLC Input Selection table for input selections.

22.8.8 CLCnGLS0

Name: CLCnGLS0
Address: 0x0DC

CLCn Gate1 Logic Select Register

Bit	7	6	5	4	3	2	1	0
	G1D4T	G1D4N	G1D3T	G1D3N	G1D2T	G1D2N	G1D1T	G1D1N
Access	R/W	R/W	R/W	R/W	R/W	R/W	R/W	R/W
Reset	x	x	x	x	x	x	x	x

Bits 1, 3, 5, 7 – G1DyT dyT: Gate1 Data 'y' True (noninverted)
Reset States: POR/BOR = xxxx
All Other Resets = uuuu

Value	Description
1	dyT is gated into g1
0	dyT is not gated into g1

Bits 0, 2, 4, 6 – G1DyN dyN: Gate1 Data 'y' Negated (inverted)
Reset States: POR/BOR = xxxx
All Other Resets = uuuu

Value	Description
1	dyN is gated into g1
0	dyN is not gated into g1

22.8.9 CLCnGLS1

Name: CLCnGLS1
Address: 0x0DD

CLCn Gate2 Logic Select Register

Bit	7	6	5	4	3	2	1	0
	G2D4T	G2D4N	G2D3T	G2D3N	G2D2T	G2D2N	G2D1T	G2D1N
Access	R/W	R/W	R/W	R/W	R/W	R/W	R/W	R/W
Reset	x	x	x	x	x	x	x	x

Bits 1, 3, 5, 7 – G2DyT dyT: Gate2 Data 'y' True (noninverted)
Reset States: POR/BOR = xxxx
All Other Resets = uuuu

Value	Description
1	dyT is gated into g2
0	dyT is not gated into g2

Bits 0, 2, 4, 6 – G2DyN dyN: Gate2 Data 'y' Negated (inverted)
Reset States: POR/BOR = xxxx
All Other Resets = uuuu

Value	Description
1	dyN is gated into g2
0	dyN is not gated into g2

22.8.10 CLCnGLS2

Name: CLCnGLS2
Address: 0x0DE

CLCn Gate3 Logic Select Register

Bit	7	6	5	4	3	2	1	0
	G3D4T	G3D4N	G3D3T	G3D3N	G3D2T	G3D2N	G3D1T	G3D1N
Access	R/W	R/W	R/W	R/W	R/W	R/W	R/W	R/W
Reset	x	x	x	x	x	x	x	x

Bits 1, 3, 5, 7 – G3DyT dyT: Gate3 Data 'y' True (noninverted)
Reset States: POR/BOR = xxxx
All Other Resets = uuuu

Value	Description
1	dyT is gated into g3
0	dyT is not gated into g3

Bits 0, 2, 4, 6 – G3DyN dyN: Gate3 Data 'y' Negated (inverted)
Reset States: POR/BOR = xxxx
All Other Resets = uuuu

Value	Description
1	dyN is gated into g3
0	dyN is not gated into g3

22.8.11 CLCnGLS3

Name: CLCnGLS3
Address: 0x0DF

CLCn Gate4 Logic Select Register

Bit	7	6	5	4	3	2	1	0
	G4D4T	G4D4N	G4D3T	G4D3N	G4D2T	G4D2N	G4D1T	G4D1N
Access	R/W	R/W	R/W	R/W	R/W	R/W	R/W	R/W
Reset	x	x	x	x	x	x	x	x

Bits 1, 3, 5, 7 – G4DyT dyT: Gate4 Data 'y' True (noninverted)
Reset States: POR/BOR = xxxx
All Other Resets = uuuu

Value	Description
1	dyT is gated into g4
0	dyT is not gated into g4

Bits 0, 2, 4, 6 – G4DyN dyN: Gate4 Data 'y' Negated (inverted)
Reset States: POR/BOR = xxxx
All Other Resets = uuuu

Value	Description
1	dyN is gated into g4
0	dyN is not gated into g4

22.8.12 CLCDATA

Name: CLCDATA
Address: 0x0D4

CLC Data Output Register

Mirror copy of CLC outputs

Bit	7	6	5	4	3	2	1	0
					CLC4OUT	CLC3OUT	CLC2OUT	CLC1OUT
Access					R/W	R/W	R/W	R/W
Reset					0	0	0	0

Bits 0, 1, 2, 3 – CLCxOUT Mirror copy of CLCx_out

Value	Description
1	CLCx_out is 1
0	CLCx_out is 0

22.9 Register Summary - CLC Control

Address	Name	Bit Pos.	7	6	5	4	3	2	1	0
0x00 ... 0xD3	Reserved									
0xD4	CLCDATA	7:0					CLC4OUT	CLC3OUT	CLC2OUT	CLC1OUT
0xD5	CLCSELECT	7:0							SLCT[1:0]	
0xD6	CLCnCON	7:0	EN		OUT	INTP	INTN	MODE[2:0]		
0xD7	CLCnPOL	7:0	POL				G4POL	G3POL	G2POL	G1POL
0xD8	CLCnSEL0	7:0		D1S[6:0]						
0xD9	CLCnSEL1	7:0		D2S[6:0]						
0xDA	CLCnSEL2	7:0		D3S[6:0]						
0xDB	CLCnSEL3	7:0		D4S[6:0]						
0xDC	CLCnGLS0	7:0	G1D4T	G1D4N	G1D3T	G1D3N	G1D2T	G1D2N	G1D1T	G1D1N
0xDD	CLCnGLS1	7:0	G2D4T	G2D4N	G2D3T	G2D3N	G2D2T	G2D2N	G2D1T	G2D1N
0xDE	CLCnGLS2	7:0	G3D4T	G3D4N	G3D3T	G3D3N	G3D2T	G3D2N	G3D1T	G3D1N
0xDF	CLCnGLS3	7:0	G4D4T	G4D4N	G4D3T	G4D3N	G4D2T	G4D2N	G4D1T	G4D1N

23. CLKREF - Reference Clock Output Module

The reference clock output module provides the ability to send a clock signal to the clock reference output pin (CLKR). The reference clock output can be routed internally as an input signal for other peripherals, such as the timers and CLCs.

The reference clock output module has the following features:

- Selectable clock source using the CLKRCLK register
- Programmable clock divider
- Selectable duty cycle

The figure below shows the simplified block diagram of the clock reference module.

Figure 23-1. Clock Reference Block Diagram

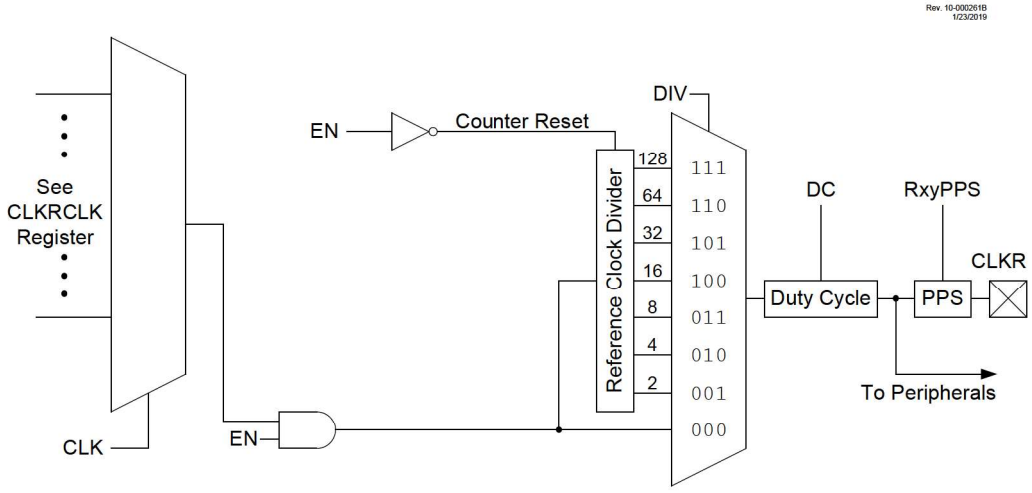

Figure 23-2. Clock Reference Timing

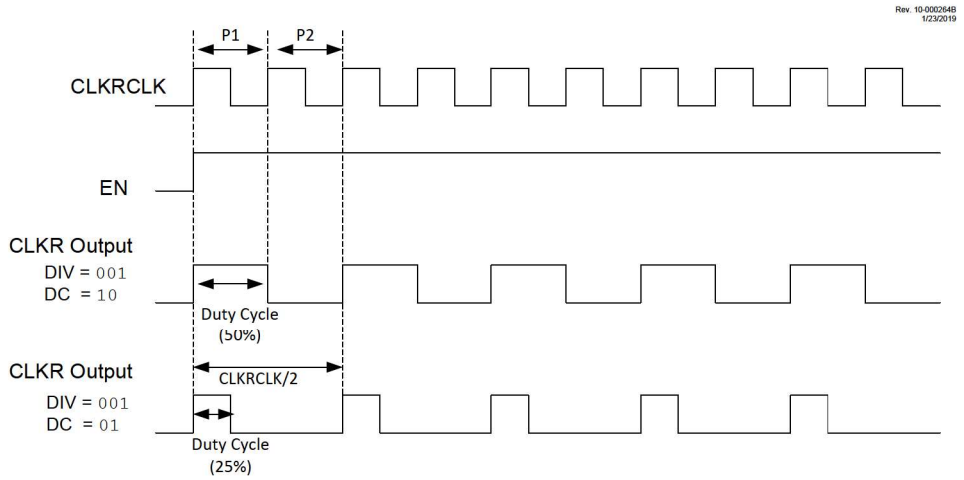

23.1 Clock Source

The clock source of the reference clock peripheral is selected with the CLK bits.

23.1.1 Clock Synchronization

The CLKR output signal is ensured to be glitch-free when the EN bit is set to start the module and enable the CLKR output. When the reference clock output is disabled, the output signal will be disabled immediately.

23.2 Programmable Clock Divider

The module takes the clock input and divides it based on the value of the DIV bits.

The following configurations are available:

- Base clock frequency value
- Base clock frequency divided by 2
- Base clock frequency divided by 4
- Base clock frequency divided by 8
- Base clock frequency divided by 16
- Base clock frequency divided by 32
- Base clock frequency divided by 64
- Base clock frequency divided by 128

23.3 Selectable Duty Cycle

The DC bits are used to modify the duty cycle of the output clock. A duty cycle of 0%, 25%, 50%, or 75% can be selected for all clock rates when the DIV value is not 0b000. When DIV = 0b000 the duty cycle defaults to 50% for all values of DC except 0b00, in which case the duty cycle is 0% (constant low output).

Important: The DC value at Reset is 10. This makes the default duty cycle 50% and not 0%.

Important: Clock dividers and clock duty cycles can be changed while the module is enabled but doing so may cause glitches to occur on the output. To avoid possible glitches, clock dividers and clock duty cycles should be changed only when the EN bit is clear.

23.4 Operation in Sleep Mode

The reference clock module continues to operate and provide a signal output in Sleep for all clock source selections except F_{OSC} (CLK = 0).

23.5 Register Definitions: Reference Clock

Long bit name prefixes for the Reference Clock peripherals are shown in the following table. Refer to the “**Long Bit Names**” section in the **"Register and Bit Naming Conventions"** chapter for more information.

Table 23-1.

Peripheral	Bit Name Prefix
CLKR	CLKR

23.5.1 CLKRCON

Name: CLKRCON
Address: 0x039

Reference Clock Control Register

Bit	7	6	5	4	3	2	1	0
	EN			DC[1:0]		DIV[2:0]		
Access	R/W			R/W	R/W	R/W	R/W	R/W
Reset	0			1	0	0	0	0

Bit 7 – EN Reference Clock Module Enable

Value	Description
1	Reference clock module enabled
0	Reference clock module is disabled

Bits 4:3 – DC[1:0] Reference Clock Duty Cycle(1)

Value	Description
11	Clock outputs duty cycle of 75%
10	Clock outputs duty cycle of 50%
01	Clock outputs duty cycle of 25%
00	Clock outputs duty cycle of 0%

Bits 2:0 – DIV[2:0] Reference Clock Divider

Value	Description
111	Base clock value divided by 128
110	Base clock value divided by 64
101	Base clock value divided by 32
100	Base clock value divided by 16
011	Base clock value divided by 8
010	Base clock value divided by 4
001	Base clock value divided by 2
000	Base clock value

Note:

1. Bits are valid for DIV ≥ 001. For DIV = 000, duty cycle is fixed at 50%.

23.5.2 CLKRCLK

Name: CLKRCLK
Address: 0x03A

Clock Reference Clock Selection Register

Bit	7	6	5	4	3	2	1	0
					CLK[3:0]			
Access					R/W	R/W	R/W	R/W
Reset					0	0	0	0

Bits 3:0 – CLK[3:0] CLKR Clock Selection

Table 23-2. Clock Reference Module Clock Sources

CLK	Clock Source
1111 - 1100	Reserved
1011	CLC4_OUT
1010	CLC3_OUT
1001	CLC2_OUT
1000	CLC1_OUT
0111	NCO1_OUT
0110	EXTOSC
0101	SOSC
0100	MFINTOSC (32 kHz)
0011	MFINTOSC (500 kHz)
0010	LFINTOSC
0001	HFINTOSC
0000	F_{OSC}

23.6 Register Summary: Reference CLK

Address	Name	Bit Pos.	7	6	5	4	3	2	1	0
0x00 ... 0x38	Reserved									
0x39	CLKRCON	7:0	EN			DC[1:0]		DIV[2:0]		
0x3A	CLKRCLK	7:0					CLK[3:0]			

24. TMR0 - Timer0 Module

The Timer0 module has the following features:

- 8-bit timer with programmable period
- 16-bit timer
- Selectable clock sources
- Synchronous and asynchronous operation
- Programmable prescaler (Independent of Watchdog Timer)
- Programmable postscaler
- Interrupt on match or overflow
- Output on I/O pin (via PPS) or to other peripherals
- Operation during Sleep

Figure 24-1. Timer0 Block Diagram

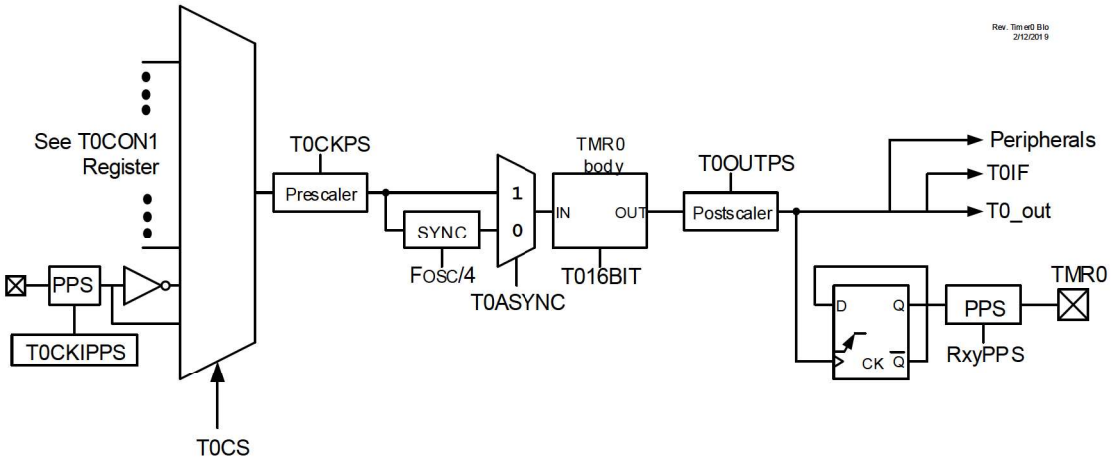

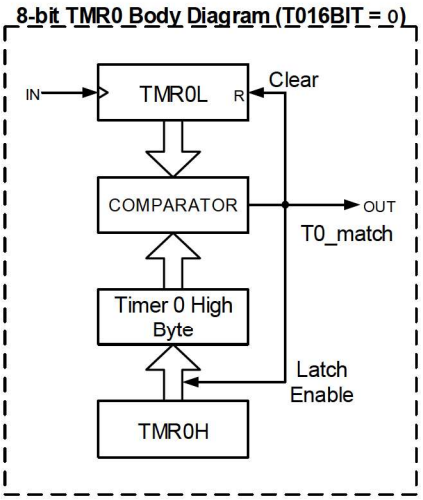

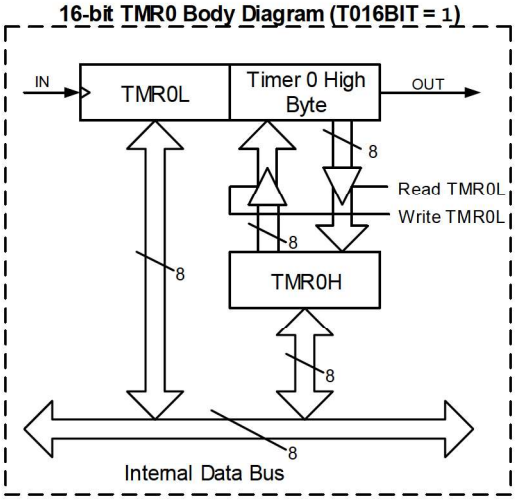

24.1 Timer0 Operation

Timer0 can operate as either an 8-bit or 16-bit timer. The mode is selected with the MD16 bit.

24.1.1 8-Bit Mode

In this mode Timer0 increments on the rising edge of the selected clock source. A prescaler on the clock input gives several prescale options (see prescaler control bits, CKPS). In this mode, as shown in Figure 24-1, a buffered version of TMR0H is maintained.

This is compared with the value of TMR0L on each cycle of the selected clock source. When the two values match, the following events occur:

- TMR0L is reset
- The contents of TMR0H are copied to the TMR0H buffer for next comparison

24.1.2 16-Bit Mode

In this mode Timer0 increments on the rising edge of the selected clock source. A prescaler on the clock input gives several prescale options (see prescaler control bits, CKPS). In this mode TMR0H:TMR0L form the 16-bit timer value. As shown in Figure 24-1, reads and writes of the TMR0H register are buffered. The TMR0H register is updated with the contents of the high byte of Timer0 when the TMR0L register is read. Similarly, writing the TMR0L register causes a transfer of the TMR0H register value to the Timer0 high byte.

This buffering allows all 16 bits of Timer0 to be read and written at the same time. Timer0 rolls over to 0x0000 on incrementing past 0xFFFF. This makes the timer free-running. While actively operating in 16-bit mode, the Timer0 value can be read but not written.

24.2 Clock Selection

Timer0 has several options for clock source selections, the option to operate synchronously/asynchronously and an available programmable prescaler. The CS bits are used to select the clock source for Timer0.

24.2.1 Synchronous Mode

When the ASYNC bit is clear, Timer0 clock is synchronized to the system clock ($F_{OSC}/4$). When operating in Synchronous mode, Timer0 clock frequency cannot exceed $F_{OSC}/4$. During Sleep mode the system clock is not available and Timer0 cannot operate.

24.2.2 Asynchronous Mode

When the ASYNC bit is set, Timer0 increments with each rising edge of the input source (or output of the prescaler, if used). Asynchronous mode allows Timer0 to continue operation during Sleep mode provided the selected clock source operates during Sleep.

24.2.3 Programmable Prescaler

Timer0 has 16 programmable input prescaler options ranging from 1:1 to 1:32768. The prescaler values are selected using the CKPS bits. The prescaler counter is not directly readable or writable. The prescaler counter is cleared on the following events:

- A write to the TMR0L register
- A write to either the T0CON0 or T0CON1 registers
- Any device Reset

24.2.4 Programmable Postscaler

Timer0 has 16 programmable output postscaler options ranging from 1:1 to 1:16. The postscaler values are selected using the OUTPS bits. The postscaler divides the output of Timer0 by the selected ratio. The postscaler counter is not directly readable or writable. The postscaler counter is cleared on the following events:

- A write to the TMR0L register
- A write to either the T0CON0 or T0CON1 registers
- Any device Reset

24.3 Timer0 Output and Interrupt

24.3.1 Timer0 Output

TMR0_out toggles on every match between TMR0L and TMR0H in 8-bit mode, or when TMR0H:TMR0L rolls over in 16-bit mode. If the output postscaler is used, the output is scaled by the ratio selected. The Timer0 output can be routed to an I/O pin via the RxyPPS output selection register, or internally to a number of Core Independent Peripherals. The Timer0 output can be monitored through software via the OUT output bit.

24.3.2 Timer0 Interrupt

The Timer0 Interrupt Flag bit (TMR0IF) is set when the TMR0_out toggles. If the Timer0 interrupt is enabled (TMR0IE), the CPU will be interrupted when the TMR0IF bit is set. When the postscaler bits (T0OUTPS) are set to 1:1 operation (no division), the T0IF flag bit will be set with every TMR0 match or rollover. In general, the TMR0IF flag bit will be set every T0OUTPS +1 matches or rollovers.

24.3.3 Timer0 Example

Timer0 Configuration:

- Timer0 mode = 16-bit
- Clock Source = $F_{OSC}/4$ (250 kHz)
- Synchronous operation
- Prescaler = 1:1
- Postscaler = 1:2 (T0OUTPS = 1)

In this case the TMR0_out toggles every two rollovers of TMR0H:TMR0L. i.e., (0xFFFF)*2*(1/250kHz) = 524.28 ms

24.4 Operation During Sleep

When operating synchronously, Timer0 will halt when the device enters Sleep mode. When operating asynchronously and the selected clock source is active, Timer0 will continue to increment and wake the device from Sleep mode if the Timer0 interrupt is enabled.

24.5 Register Definitions: Timer0 Control

24.5.1 T0CON0

Name: T0CON0
Address: 0x31A

Timer0 Control Register 0

Bit	7	6	5	4	3	2	1	0
	EN		OUT	MD16	OUTPS[3:0]			
Access	R/W		R	R/W	R/W	R/W	R/W	R/W
Reset	0		0	0	0	0	0	0

Bit 7 – EN TMR0 Enable

Value	Description
1	The module is enabled and operating
0	The module is disabled

Bit 5 – OUT TMR0 Output

Bit 4 – MD16 16-Bit Timer Operation Select

Value	Description
1	TMR0 is a 16-bit timer
0	TMR0 is an 8-bit timer

Bits 3:0 – OUTPS[3:0] TMR0 Output Postscaler (Divider) Select

Value	Description
1111	1:16 Postscaler
1110	1:15 Postscaler
1101	1:14 Postscaler
1100	1:13 Postscaler
1011	1:12 Postscaler
1010	1:11 Postscaler
1001	1:10 Postscaler
1000	1:9 Postscaler
0111	1:8 Postscaler
0110	1:7 Postscaler
0101	1:6 Postscaler
0100	1:5 Postscaler
0011	1:4 Postscaler
0010	1:3 Postscaler
0001	1:2 Postscaler
0000	1:1 Postscaler

24.5.2 T0CON1

Name: T0CON1
Address: 0x31B

Timer0 Control Register 1

Bit	7	6	5	4	3	2	1	0
	CS[2:0]			ASYNC	CKPS[3:0]			
Access	R/W	R/W	R/W	R/W	R/W	R/W	R/W	R/W
Reset	0	0	0	0	0	0	0	0

Bits 7:5 – CS[2:0] Timer0 Clock Source Select

Value	Description
111	CLC1_OUT
110	SOSC
101	MFINTOSC (500 kHz)
100	LFINTOSC
011	HFINTOSC
010	$F_{OSC}/4$
001	Pin selected by T0CKIPPS (Inverted)
000	Pin selected by T0CKIPPS (Non-inverted)

Bit 4 – ASYNC TMR0 Input Asynchronization Enable

Value	Description
1	The input to the TMR0 counter is not synchronized to system clocks
0	The input to the TMR0 counter is synchronized to Fosc/4

Bits 3:0 – CKPS[3:0] Prescaler Rate Select

Value	Description
1111	1:32768
1110	1:16384
1101	1:8192
1100	1:4096
1011	1:2048
1010	1:1024
1001	1:512
1000	1:256
0111	1:128
0110	1:64
0101	1:32
0100	1:16
0011	1:8
0010	1:4
0001	1:2
0000	1:1

24.5.3 TMR0H

Name: TMR0H
Address: 0x319

Timer0 Period/Count High Register

Bit	7	6	5	4	3	2	1	0
	TMR0H[7:0]							
Access	R/W	R/W	R/W	R/W	R/W	R/W	R/W	R/W
Reset	1	1	1	1	1	1	1	1

Bits 7:0 – TMR0H[7:0] TMR0 Most Significant Counter

Value	Condition	Description
0 to 255	MD16 = 0	8-bit Timer0 Period Value. TMR0L continues counting from 0 when this value is reached.
0 to 255	MD16 = 1	16-bit Timer0 Most Significant Byte

24.5.4 TMR0L

Name: TMR0L
Address: 0x318

Timer0 Period/Count Low Register

Bit	7	6	5	4	3	2	1	0
	TMR0L[7:0]							
Access	R/W	R/W	R/W	R/W	R/W	R/W	R/W	R/W
Reset	0	0	0	0	0	0	0	0

Bits 7:0 – TMR0L[7:0] TMR0 Least Significant Counter

Value	Condition	Description
0 to 255	MD16 = 0	8-bit Timer0 Counter bits
0 to 255	MD16 = 1	16-bit Timer0 Least Significant Byte

24.6 Register Summary: Timer0

Address	Name	Bit Pos.	7	6	5	4	3	2	1	0
0x00 ... 0x0317	Reserved									
0x0318	TMR0L	7:0	TMR0L[7:0]							
0x0319	TMR0H	7:0	TMR0H[7:0]							
0x031A	T0CON0	7:0	EN		OUT	MD16	OUTPS[3:0]			
0x031B	T0CON1	7:0	CS[2:0]			ASYNC	CKPS[3:0]			

25. TMR1 - Timer1 Module with Gate Control

The Timer1 module is a 16-bit timer/counter with the following features:

- 16-bit timer/counter register pair (TMRxH:TMRxL)
- Programmable internal or external clock source
- 2-bit prescaler
- Clock source for optional comparator synchronization
- Multiple Timer1 gate (count enable) sources
- Interrupt-on-overflow
- Wake-up on overflow (external clock, Asynchronous mode only)
- 16-bit read/write operation
- Time base for the capture/compare function with the CCP modules
- Special event trigger (with CCP)
- Selectable gate source polarity
- Gate Toggle mode
- Gate Single-Pulse mode
- Gate value status
- Gate event interrupt

Important: References to the module Timer1 apply to all the odd numbered timers on this device.

Figure 25-1. Timer1 Block Diagram

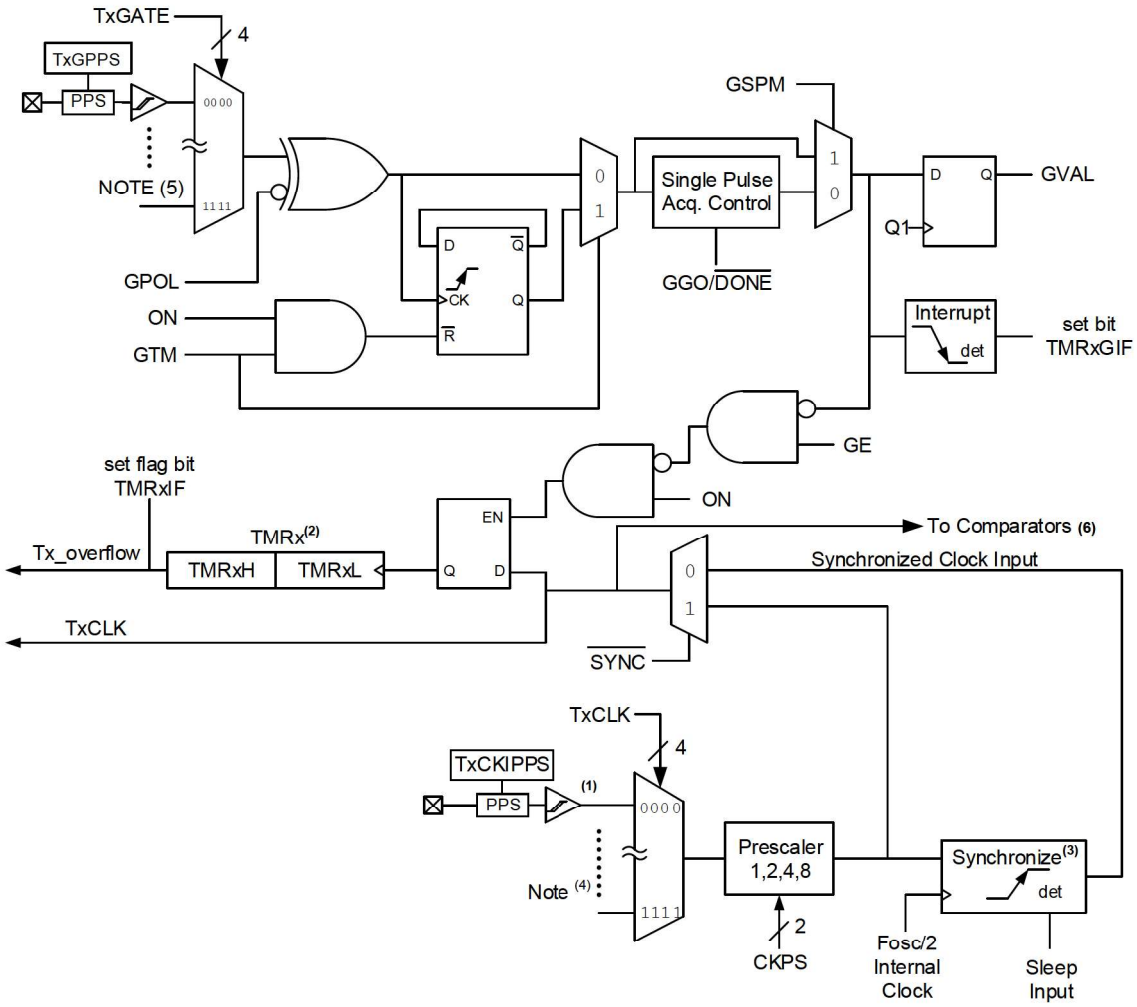

Notes:

1. This signal comes from the pin selected by Timer1 PPS register.
2. TMRx register increments on rising edge.
3. Synchronize does not operate while in Sleep.
4. See TxCLK for clock source selections.
5. See TxGATE for gate source selections.
6. Synchronized comparator output should not be used in conjunction with synchronized input clock.

25.1 Timer1 Operation

The Timer1 module is a 16-bit incrementing counter that is accessed through the TMRx register. Writes to TMRx directly update the counter. When used with an internal clock source, the module is a timer that increments on every instruction cycle. When used with an external clock source, the module can be used as either a timer or counter and increments on every selected edge of the external source.

Timer1 is enabled by configuring the ON and GE bits. Table 25-1 displays the possible Timer1 enable selections.

Table 25-1. Timer1 Enable Selections

ON	GE	Timer1 Operation
1	1	Count Enabled
1	0	Always On
0	1	Off
0	0	Off

25.2 Clock Source Selection

The CS bits select the clock source for Timer1. These bits allow the selection of several possible synchronous and asynchronous clock sources.

25.2.1 Internal Clock Source

When the internal clock source is selected the TMRx register will increment on multiples of F_{OSC} as determined by the Timer1 prescaler.

When the F_{OSC} internal clock source is selected, the TMRx register value will increment by four counts every instruction clock cycle. Due to this condition, a 2 LSB error in resolution will occur when reading the TMRx value. To utilize the full resolution of Timer1, an asynchronous input signal must be used to gate the Timer1 clock input.

Important: In Counter mode, a falling edge must be registered by the counter prior to the first incrementing rising edge after any one or more of the following conditions:

- Timer1 enabled after POR
- Write to TMRxH or TMRxL
- Timer1 is disabled
- Timer1 is disabled (ON = 0) when TxCKI is high then Timer1 is enabled (ON = 1) when TxCKI is low. Refer to the figure below.

Figure 25-2. Timer1 Incrementing Edge

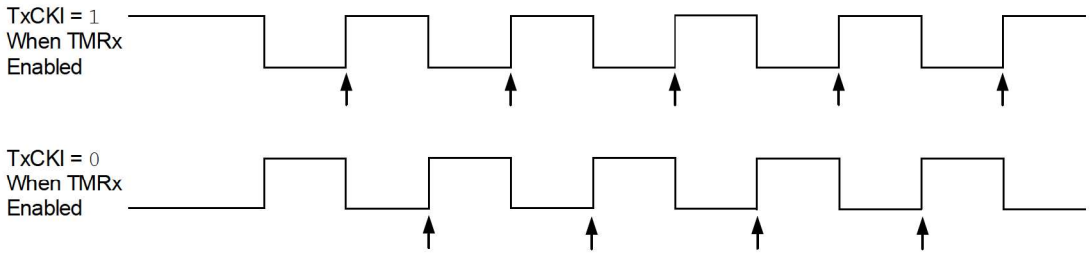

Notes:

1. Arrows indicate counter increments.
2. In Counter mode, a falling edge must be registered by the counter prior to the first incrementing rising edge of the clock.

25.2.2 External Clock Source

When the external clock source is selected, the TMRx module may work as a timer or a counter. When enabled to count, Timer1 is incremented on the rising edge of the external clock input of the TxCKIPPS pin. This external clock source can be synchronized to the system clock or it can run asynchronously.

25.3 Timer1 Prescaler

Timer1 has four prescaler options allowing 1, 2, 4 or 8 divisions of the clock input. The CKPS bits control the prescale counter. The prescale counter is not directly readable or writable; however, the prescaler counter is cleared upon a write to TMRx.

25.4 Secondary Oscillator

A secondary low-power 32.768 kHz oscillator circuit is built-in between pins SOSCI (input) and SOSCO (amplifier output). This internal circuit is to be used in conjunction with an external 32.768 kHz crystal. The secondary oscillator is not dedicated only to Timer1; it can also be used by other modules.

The oscillator circuit is enabled by setting the SOSCEN bit of the OSCEN register. This can be used as one of the Timer1 clock sources selected with the CS bits. The oscillator will continue to run during Sleep.

Important: The oscillator requires a start-up and stabilization time before use. Thus, the SOSCEN bit of the OSCEN register should be set and a suitable delay observed prior to enabling Timer1. A software check can be performed to confirm if the secondary oscillator is enabled and ready to use. This is done by polling the secondary oscillator ready Status bit. Refer to **"OSC - Oscillator Module (with Fail-Safe Clock Monitor)"** for more details.

25.5 Timer1 Operation in Asynchronous Counter Mode

When the SYNC control bit is set, the external clock input is not synchronized. The timer increments asynchronously to the internal phase clocks. If the external clock source is selected then the timer will continue to run during Sleep and can generate an interrupt on overflow, which will wake-up the processor. However, special precautions in software are needed to read/write the timer.

Important: When switching from synchronous to asynchronous operation, it is possible to skip an increment. When switching from asynchronous to synchronous operation, it is possible to produce an additional increment.

25.5.1 Reading and Writing TMRx in Asynchronous Counter Mode

Reading TMRxH or TMRxL while the timer is running from an external asynchronous clock will ensure a valid read (taken care of in hardware). However, the user should keep in mind that reading the 16-bit timer in two 8-bit values itself, poses certain problems, since there may be a carry out of TMRxL to TMRxH between the reads.

For writes, it is recommended that the user simply stop the timer and write the desired values. A write contention may occur by writing to the timer registers, while the register is incrementing. This may produce an unpredictable value in the TMRxH:TMRxL register pair.

25.6 Timer1 16-Bit Read/Write Mode

Timer1 can be configured to read and write all 16 bits of data to and from the 8-bit TMRxL and TMRxH registers, simultaneously. The 16-bit read and write operations are enabled by setting the RD16 bit. To accomplish this function, the TMRxH register value is mapped to a buffer register called the TMRxH buffer register. While in 16-Bit mode, the TMRxH register is not directly readable or writable and all read and write operations take place through the use of this TMRxH buffer register.

When a read from the TMRxL register is requested, the value of the TMRxH register is simultaneously loaded into the TMRxH buffer register. When a read from the TMRxH register is requested, the value is provided from the TMRxH buffer register instead. This provides the user with the ability to accurately read all 16 bits of the Timer1 value from a

single instance in time. Refer to the figure below for more details. In contrast, when not in 16-Bit mode, the user must read each register separately and determine if the values have become invalid due to a rollover that may have occurred between the read operations.

When a write request of the TMRxL register is requested, the TMRxH buffer register is simultaneously updated with the contents of the TMRxH register. The value of TMRxH must be preloaded into the TMRxH buffer register prior to the write request for the TMRxL register. This provides the user with the ability to write all 16 bits to the TMRx register at the same time. Any requests to write to TMRxH directly does not clear the Timer1 prescaler value. The prescaler value is only cleared through write requests to the TMRxL register.

Figure 25-3. Timer1 16-Bit Read/Write Mode Block Diagram

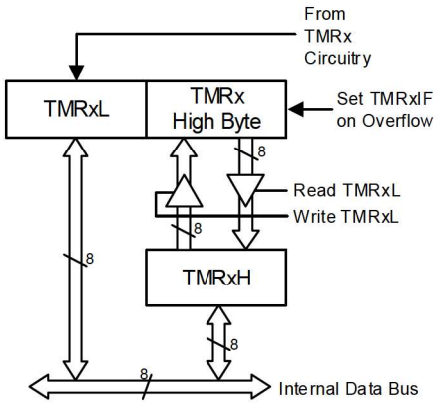

25.7 Timer1 Gate

Timer1 can be configured to count freely or the count can be enabled and disabled using Timer1 gate circuitry. This is also referred to as Timer1 gate enable. Timer1 gate can also be driven by multiple selectable sources.

25.7.1 Timer1 Gate Enable

The Timer1 Gate Enable mode is enabled by setting the GE bit. The polarity of the Timer1 Gate Enable mode is configured using the GPOL bit.

When Timer1 Gate Enable mode is enabled, Timer1 will increment on the rising edge of the Timer1 clock source. When Timer1 Gate signal is inactive, the timer will not increment and hold the current count. Enable mode is disabled, no incrementing will occur and Timer1 will hold the current count. See figure below for timing details.

Table 25-2. Timer1 Gate Enable Selections

TMRxCLK	GPOL	TxG	Timer1 Operation
↑	1	1	Counts
↑	1	0	Holds Count
↑	0	1	Holds Count
↑	0	0	Counts

Figure 25-4. Timer1 Gate Enable Mode

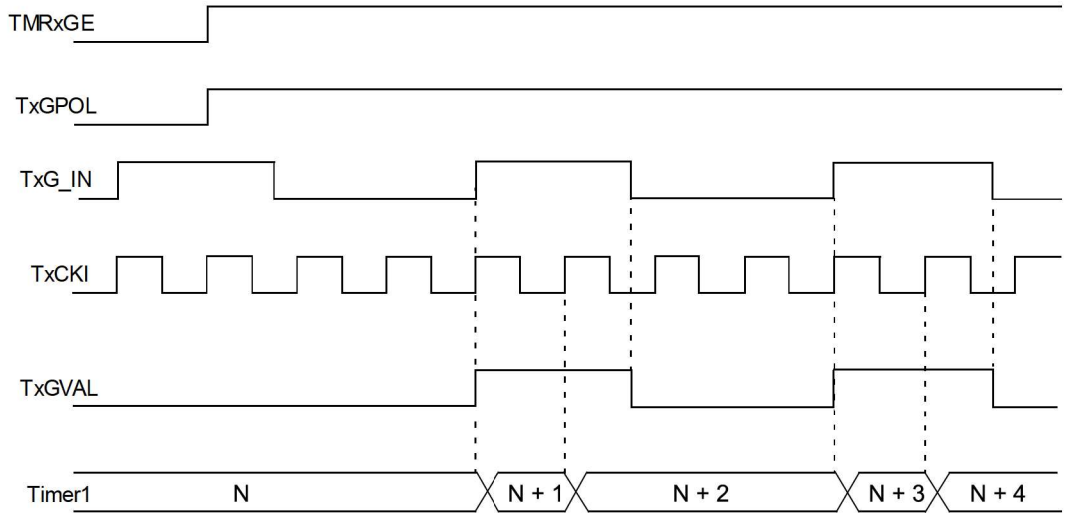

25.7.2 Timer1 Gate Source Selection

The gate source for Timer1 is selected using the GSS bits. The polarity selection for the gate source is controlled by the GPOL bit.

Any of the above mentioned signals can be used to trigger the gate. The output of the CMPx can be synchronized to the Timer1 clock or left asynchronous. For more information refer to the **"Comparator Output Synchronization"** section.

25.7.3 Timer1 Gate Toggle Mode

When Timer1 Gate Toggle mode is enabled, it is possible to measure the full-cycle length of a Timer1 Gate signal, as opposed to the duration of a single level pulse. The Timer1 gate source is routed through a flip-flop that changes state on every incrementing edge of the signal. See figure below for timing details.

Timer1 Gate Toggle mode is enabled by setting the GTM bit. When the GTM bit is cleared, the flip-flop is cleared and held clear. This is necessary in order to control which edge is measured.

Important: Enabling Toggle mode at the same time as changing the gate polarity may result in indeterminate operation.

Figure 25-5. Timer1 Gate Toggle Mode

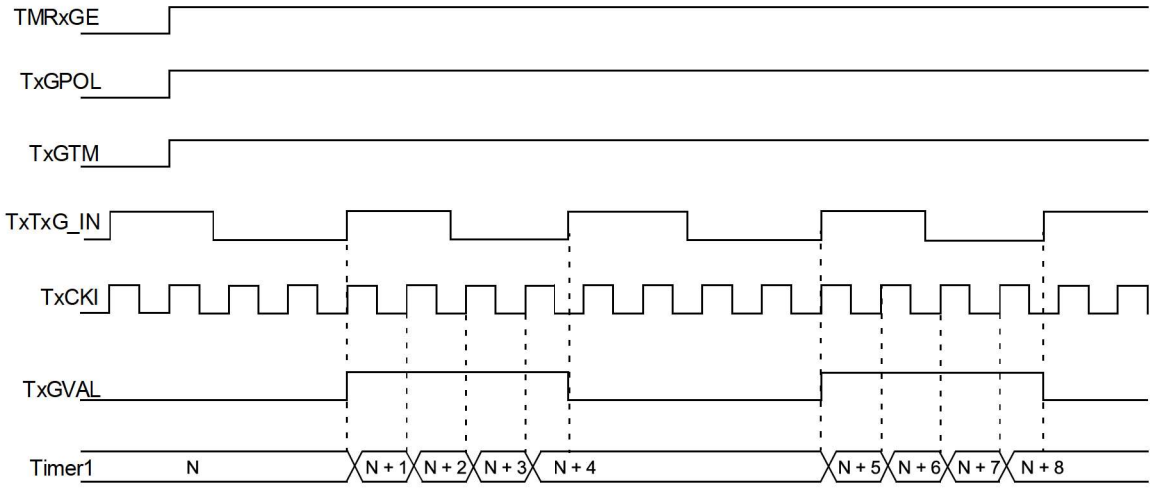

25.7.4 Timer1 Gate Single Pulse Mode

When Timer1 Gate Single Pulse mode is enabled, it is possible to capture a single pulse gate event. Timer1 Gate Single Pulse mode is first enabled by setting the GSPM bit. Next, the GGO/DONE must be set. The Timer1 will be fully enabled on the next incrementing edge. On the next trailing edge of the pulse, the GGO/$\overline{\text{DONE}}$ bit will automatically be cleared. No other gate events will be allowed to increment Timer1 until the GGO/$\overline{\text{DONE}}$ bit is once again set in software.

Figure 25-6. Timer1 Gate Single Pulse Mode

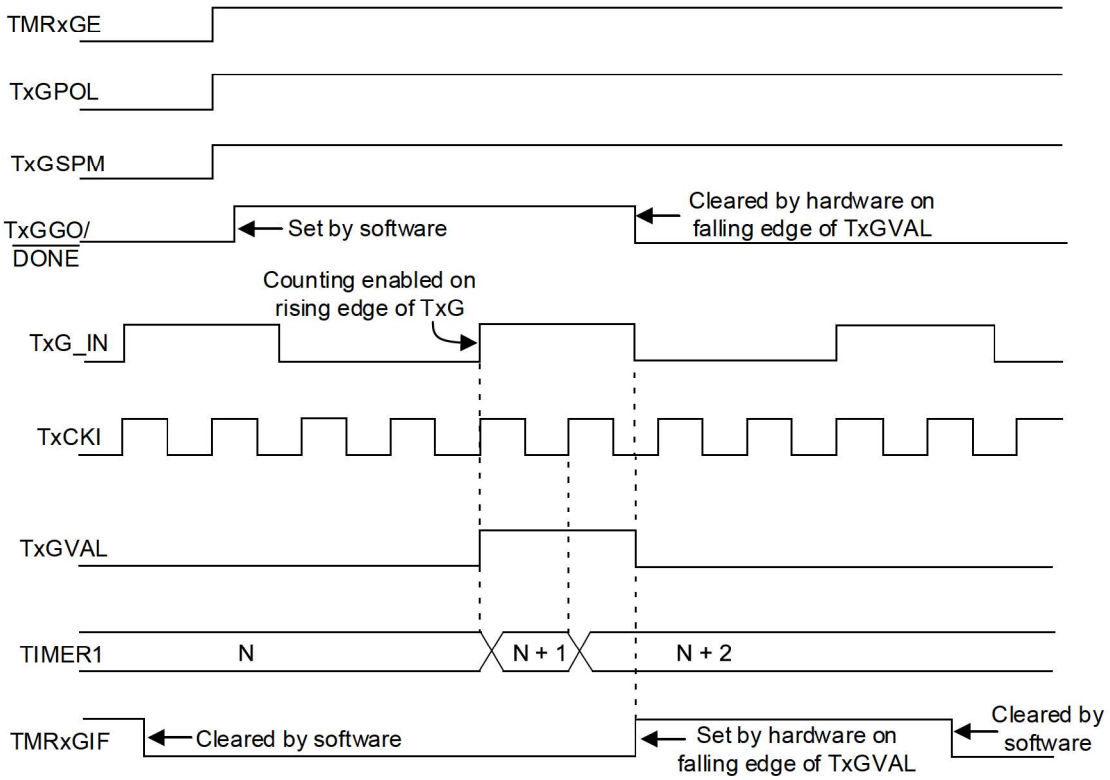

Clearing the GSPM bit will also clear the GGO/$\overline{\text{DONE}}$ bit. See the figure below for timing details. Enabling the Toggle mode and the Single Pulse mode simultaneously will permit both sections to work together. This allows the cycle times on the Timer1 gate source to be measured. See figure below for timing details.

Figure 25-7. Timer1 Gate Single Pulse and Toggle Combined Mode

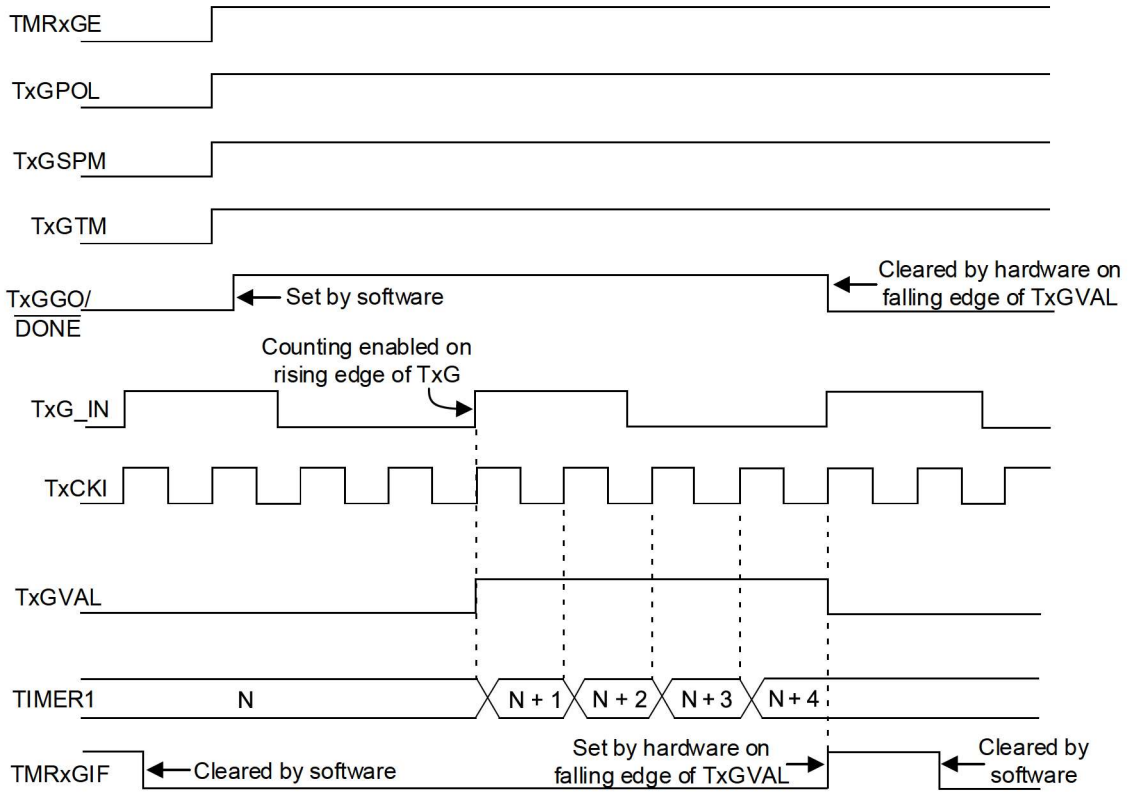

25.7.5 Timer1 Gate Value Status

When Timer1 gate value status is utilized, it is possible to read the most current level of the gate control value. The value is stored in the GVAL bit in the TxGCON register. The GVAL bit is valid even when the Timer1 gate is not enabled (GE bit is cleared).

25.7.6 Timer1 Gate Event Interrupt

When Timer1 gate event interrupt is enabled, it is possible to generate an interrupt upon the completion of a gate event. When the falling edge of GVAL occurs, the TMRxGIF flag bit in one of the PIR registers will be set. If the TMRxGIE bit in the corresponding PIE register is set, then an interrupt will be recognized.

The TMRxGIF flag bit operates even when the Timer1 gate is not enabled (GE bit is cleared). For more information on selecting high or low priority status for the Timer1 gate event interrupt see the **"VIC - Vectored Interrupt Controller Module"** chapter.

25.8 Timer1 Interrupt

The TMRx register increments to FFFFh and rolls over to 0000h. When TMRx rolls over, the Timer1 interrupt flag bit of the PIRx register is set. To enable the interrupt-on-rollover, the following bits must be set:

- ON bit of the TxCON register
- TMRxIE bits of the PIEx register
- Global interrupts must be enabled

The interrupt is cleared by clearing the TMRxIF bit as a task in the Interrupt Service Routine. For more information on selecting high or low priority status for the Timer1 overflow interrupt, see the **"VIC - Vectored Interrupt Controller Module"** chapter.

Important: The TMRx register and the TMRxIF bit should be cleared before enabling interrupts.

25.9 Timer1 Operation During Sleep

Timer1 can only operate during Sleep when configured as an asynchronous counter. In this mode, many clock sources can be used to increment the counter. To set up the timer to wake the device:

- ON bit must be set
- TMRxIE bit of the PIEx register must be set
- Global interrupts must be enabled
- SYNC bit must be set
- Configure the TxCLK register for using any clock source other than F_{OSC} and $F_{OSC}/4$

The device will wake-up on an overflow and execute the next instruction. If global interrupts are enabled, the device will call the Interrupt Service Routine. The secondary oscillator will continue to operate in Sleep regardless of the SYNC bit setting.

25.10 CCP Capture/Compare Time Base

The CCP modules use TMRx as the time base when operating in Capture or Compare mode. In Capture mode, the value in TMRx is copied into the CCPRx register on a capture event. In Compare mode, an event is triggered when the value in the CCPRx register matches the value in TMRx. This event can be a Special Event Trigger.

25.11 CCP Special Event Trigger

When any of the CCPs are configured to trigger a special event, the trigger will clear the TMRx register. This special event does not cause a Timer1 interrupt. The CCP module may still be configured to generate a CCP interrupt. In this mode of operation, the CCPRx register becomes the period register for Timer1. Timer1 should be synchronized and $F_{OSC}/4$ should be selected as the clock source in order to utilize the Special Event Trigger. Asynchronous operation of Timer1 can cause a Special Event Trigger to be missed. In the event that a write to TMRxH or TMRxL coincides with a Special Event Trigger from the CCP, the write will take precedence.

25.12 Peripheral Module Disable

When a peripheral is not used or inactive, the module can be disabled by setting the Module Disable bit in the PMD registers. This will reduce power consumption to an absolute minimum. Setting the PMD bits holds the module in Reset and disconnects the module's clock source. The Module Disable bits for Timer1 (TMR1MD) are in the PMDx register. See the **"PMD - Peripheral Module Disable"** chapter for more information.

25.13 Register Definitions: Timer1 Control

Long bit name prefixes for the System Arbiter Priority Registers are shown in the table below where "x" refers to the Priority Register instance number. Refer to the **"Long Bit Names"** section in the **"Register and Bit Naming Conventions"** chapter for more information.

Table 25-3. Timer1 Register Bit Name Prefixes

Peripheral	Bit Name Prefix
Timer1	T1
Timer3	T3

25.13.1 TxCON

Name: TxCON
Address: 0x314,0x325

Timer Control Register

Bit	7	6	5	4	3	2	1	0
			CKPS[1:0]			$\overline{\text{SYNC}}$	RD16	ON
Access			R/W	R/W		R/W	R/W	R/W
Reset			0	0		0	0	0

Bits 5:4 – CKPS[1:0] Timer Input Clock Prescaler Select
Reset States: POR/BOR = 00
All Other Resets = uu

Value	Description
11	1:8 Prescaler value
10	1:4 Prescaler value
01	1:2 Prescaler value
00	1:1 Prescaler value

Bit 2 – $\overline{\text{SYNC}}$ Timer External Clock Input Synchronization Control
Reset States: POR/BOR = 0
All Other Resets = u

Value	Condition	Description
x	CS = $F_{OSC}/4$ or F_{OSC}	This bit is ignored. Timer uses the incoming clock as is.
1	All other clock sources	Do not synchronize external clock input
0	All other clock sources	Synchronize external clock input with system clock

Bit 1 – RD16 16-Bit Read/Write Mode Enable
Reset States: POR/BOR = 0
All Other Resets = u

Value	Description
1	Enables register read/write of Timer in one 16-bit operation
0	Enables register read/write of Timer in two 8-bit operations

Bit 0 – ON Timer On
Reset States: POR/BOR = 0
All Other Resets = u

Value	Description
1	Enables Timer
0	Disables Timer

25.13.2 TxGCON

Name: TxGCON
Address: 0x315,0x326

Timer Gate Control Register

Bit	7	6	5	4	3	2	1	0
	GE	GPOL	GTM	GSPM	GGO/$\overline{\text{DONE}}$	GVAL		
Access	R/W	R/W	R/W	R/W	R/W	R		
Reset	0	0	0	0	0	x		

Bit 7 – GE Timer Gate Enable
Reset States: POR/BOR = 0
All Other Resets = u

Value	Condition	Description
1	ON = 1	Timer counting is controlled by the Timer gate function
0	ON = 1	Timer is always counting
X	ON = 0	This bit is ignored

Bit 6 – GPOL Timer Gate Polarity
Reset States: POR/BOR = 0
All Other Resets = u

Value	Description
1	Timer gate is active-high (Timer counts when gate is high)
0	Timer gate is active-low (Timer counts when gate is low)

Bit 5 – GTM Timer Gate Toggle Mode
Timer Gate Flip-Flop Toggles on every rising edge when Toggle mode is enabled.
Reset States: POR/BOR = 0
All Other Resets = u

Value	Description
1	Timer Gate Toggle mode is enabled
0	Timer Gate Toggle mode is disabled and Toggle flip-flop is cleared

Bit 4 – GSPM Timer Gate Single Pulse Mode
Reset States: POR/BOR = 0
All Other Resets = u

Value	Description
1	Timer Gate Single Pulse mode is enabled and is controlling Timer gate
0	Timer Gate Single Pulse mode is disabled

Bit 3 – GGO/$\overline{\text{DONE}}$ Timer Gate Single Pulse Acquisition Status
This bit is automatically cleared when TxGSPM is cleared.
Reset States: POR/BOR = 0
All Other Resets = u

Value	Description
1	Timer Gate Single Pulse Acquisition is ready, waiting for an edge
0	Timer Gate Single Pulse Acquisition has completed or has not been started

Bit 2 – GVAL Timer Gate Current State
Indicates the current state of the timer gate that could be provided to TMRxH:TMRxL
Unaffected by Timer Gate Enable (GE bit)

25.13.3 TxCLK

Name: TxCLK
Address: 0x317,0x328

Timer Clock Source Selection Register

Bit	7	6	5	4	3	2	1	0
				CS[4:0]				
Access				R/W	R/W	R/W	R/W	R/W
Reset				0	0	0	0	0

Bits 4:0 – CS[4:0] Timer Clock Source Selection

Table 25-4. Timer Clock Sources

CS	Clock Source	
	Timer1	Timer3
11111 - 10001	Reserved	
10000	CLC4_OUT	
01111	CLC3_OUT	
01110	CLC2_OUT	
01101	CLC1_OUT	
01100	TMR3_OUT	Reserved
01011	Reserved	TMR1_OUT
01010	TMR0_OUT	
01001	CLKREF_OUT	
01000	EXTOSC	
00111	SOSC	
00110	MFINTOSC (32 kHz)	
00101	MFINTOSC (500 kHz)	
00100	LFINTOSC	
00011	HFINTOSC	
00010	F_{OSC}	
00001	$F_{OSC}/4$	
00000	Pin selected by T1CKIPPS	Pin selected by T3CKIPPS

Reset States: POR/BOR = 00000
All Other Resets = uuuuu

25.13.4 TxGATE

Name: TxGATE
Address: 0x316,0x327

Timer Gate Source Selection Register

Bit	7	6	5	4	3	2	1	0
				GSS[4:0]				
Access				R/W	R/W	R/W	R/W	R/W
Reset				0	0	0	0	0

Bits 4:0 – GSS[4:0] Timer Gate Source Selection

Table 25-5. Timer Gate Sources

GSS	Gate Source	
	Timer1	Timer3
11111 - 10110	Reserved	
10101	CLC4_OUT	
10100	CLC3_OUT	
10011	CLC2_OUT	
10010	CLC1_OUT	
10001	ZCD_OUT	
10000	CMP2_OUT	
01111	CMP1_OUT	
01110	NCO1_OUT	
01101	PWM3S1P2_OUT	
01100	PWM3S1P1_OUT	
01011	PWM2S1P2_OUT	
01010	PWM2S1P1_OUT	
01001	PWM1S1P2_OUT	
01000	PWM1S1P1_OUT	
00111	CCP1_OUT	
00110	SMT1_OUT	
00101	TMR4_Postscaler_OUT	
00100	TMR3_OUT	Reserved
00011	TMR2_Postscaler_OUT	
00010	Reserved	TMR1_OUT
00001	TMR0_OUT	
00000	Pin selected by T1GPPS	Pin selected by T3GPPS

25.13.5 TMRx

Name: TMRx
Address: 0x312,0x323

Timer Register

Bit	15	14	13	12	11	10	9	8
	TMRx[15:8]							
Access	R/W	R/W	R/W	R/W	R/W	R/W	R/W	R/W
Reset	0	0	0	0	0	0	0	0

Bit	7	6	5	4	3	2	1	0
	TMRx[7:0]							
Access	R/W	R/W	R/W	R/W	R/W	R/W	R/W	R/W
Reset	0	0	0	0	0	0	0	0

Bits 15:0 – TMRx[15:0] Timer Register Value
Reset States: POR/BOR = 0000000000000000
All Other Resets = uuuuuuuuuuuuuuuu

Notes: The individual bytes in this multi-byte register can be accessed with the following register names:

- TMRxH: Accesses the high byte TMRx[15:8]
- TMRxL: Accesses the low byte TMRx[7:0]

25.14 Register Summary Timer 1

Address	Name	Bit Pos.	7	6	5	4	3	2	1	0
0x00 ... 0x0311	Reserved									
0x0312	TMR1	7:0	TMR1[7:0]							
		15:8	TMR1[15:8]							
0x0314	T1CON	7:0			CKPS[1:0]			SYNC	RD16	ON
0x0315	T1GCON	7:0	GE	GPOL	GTM	GSPM	GGO/DONE	GVAL		
0x0316	T1GATE	7:0				GSS[4:0]				
0x0317	T1CLK	7:0				CS[4:0]				
0x0318 ... 0x0322	Reserved									
0x0323	TMR3	7:0	TMR3[7:0]							
		15:8	TMR3[15:8]							
0x0325	T3CON	7:0			CKPS[1:0]			SYNC	RD16	ON
0x0326	T3GCON	7:0	GE	GPOL	GTM	GSPM	GGO/DONE	GVAL		
0x0327	T3GATE	7:0				GSS[4:0]				
0x0328	T3CLK	7:0				CS[4:0]				

26. TMR2 - Timer2 Module

The Timer2 module is a 8-bit timer that incorporates the following features:

- 8-bit timer and period registers
- Readable and writable
- Software programmable prescaler (1:1 to 1:128)
- Software programmable postscaler (1:1 to 1:16)
- Interrupt on T2TMR match with T2PR
- One-shot operation
- Full asynchronous operation
- Includes Hardware Limit Timer (HLT)
- Alternate clock sources
- External timer Reset signal sources
- Configurable timer Reset operation

See Figure 26-1 for a block diagram of Timer2.

Important: References to module Timer2 apply to all the even numbered timers on this device. (Timer2, Timer4, etc.)

Figure 26-1. Timer2 with Hardware Limit Timer (HLT) Block Diagram

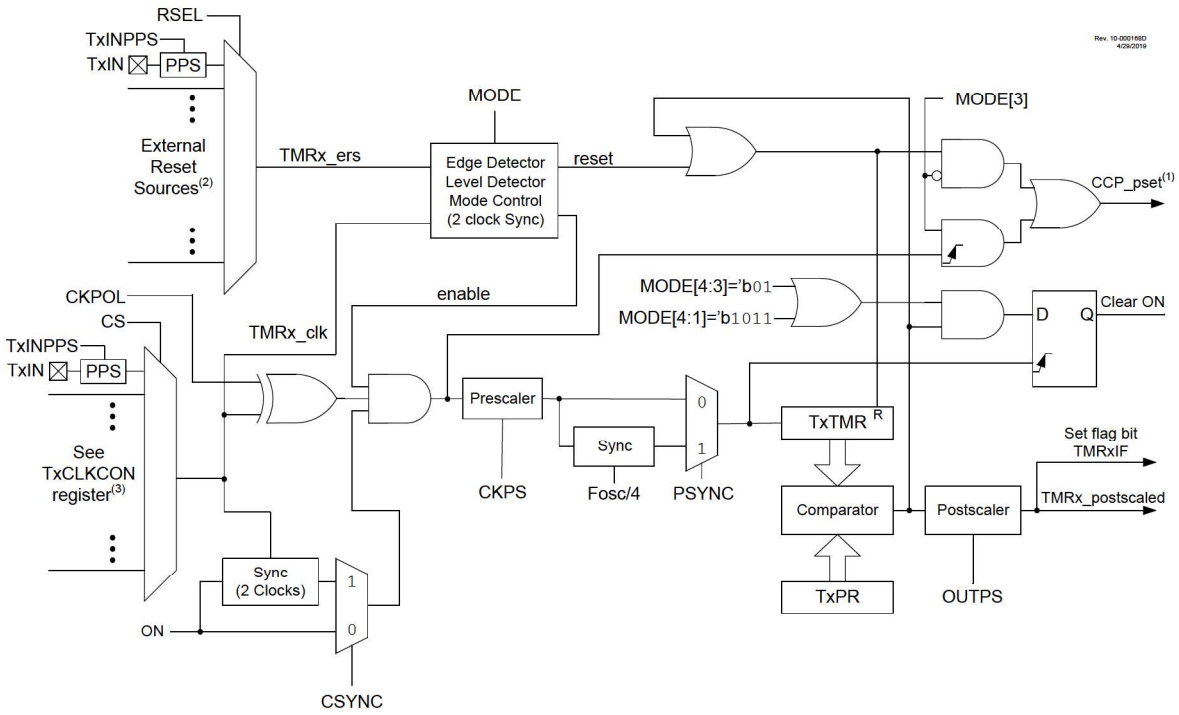

Notes:

1. Signal to the CCP peripheral for PWM pulse trigger in PWM mode.
2. See RSEL for external Reset sources.
3. See CS for clock source selections.

26.1 Timer2 Operation

Timer2 operates in three major modes:

- Free-Running Period
- One-shot
- Monostable

Within each operating mode there are several options for starting, stopping, and Reset. Table 26-1 lists the options.

In all modes, the T2TMR count register increments on the rising edge of the clock signal from the programmable prescaler. When T2TMR equals T2PR, a high level output to the postscaler counter is generated. T2TMR is cleared on the next clock input.

An external signal from hardware can also be configured to gate the timer operation or force a T2TMR count Reset. In Gate modes the counter stops when the gate is disabled and resumes when the gate is enabled. In Reset modes the T2TMR count is reset on either the level or edge from the external source.

The T2TMR and T2PR registers are both directly readable and writable. The T2TMR register is cleared and the T2PR register initializes to 0xFF on any device Reset. Both the prescaler and postscaler counters are cleared on the following events:

- A write to the T2TMR register
- A write to the T2CON register
- Any device Reset
- External Reset source event that resets the timer.

Important: T2TMR is not cleared when T2CON is written.

26.1.1 Free-Running Period Mode

The value of T2TMR is compared to that of the Period register, T2PR, on each clock cycle. When the two values match, the comparator resets the value of T2TMR to 0x00 on the next cycle and increments the output postscaler counter. When the postscaler count equals the value in the OUTPS bits of the T2CON register then a one clock period wide pulse occurs on the TMR2_postscaled output, and the postscaler count is cleared.

26.1.2 One-Shot Mode

The One-Shot mode is identical to the Free-Running Period mode except that the ON bit is cleared and the timer is stopped when T2TMR matches T2PR and will not restart until the ON bit is cycled off and on. Postscaler (OUTPS) values other than zero are ignored in this mode because the timer is stopped at the first period event and the postscaler is reset when the timer is restarted.

26.1.3 Monostable Mode

Monostable modes are similar to One-Shot modes except that the ON bit is not cleared and the timer can be restarted by an external Reset event.

26.2 Timer2 Output

The Timer2 module's primary output is TMR2_postscaled, which pulses for a single TMR2_clk period upon each match of the postscaler counter and the OUTPS bits of the T2CON register. The postscaler is incremented each time the T2TMR value matches the T2PR value. This signal can also be selected as an input to other Core Independent Peripherals:

In addition, the Timer2 is also used by the CCP module for pulse generation in PWM mode. See "**PWM Overview**" and "**PWM Period**" sections for more details on setting up Timer2 for use with the CCP and PWM modules.

26.3 External Reset Sources

In addition to the clock source, the Timer2 can also be driven by an external Reset source input. This external Reset input is selected for each timer with the corresponding TxRST register. The external Reset input can control starting and stopping of the timer, as well as resetting the timer, depending on the mode used.

26.4 Timer2 Interrupt

Timer2 can also generate a device interrupt. The interrupt is generated when the postscaler counter matches the selected postscaler value (OUTPS bits of T2CON register). The interrupt is enabled by setting the TMR2IE interrupt enable bit. Interrupt timing is illustrated in the figure below.

Figure 26-2. Timer2 Prescaler, Postscaler, and Interrupt Timing Diagram

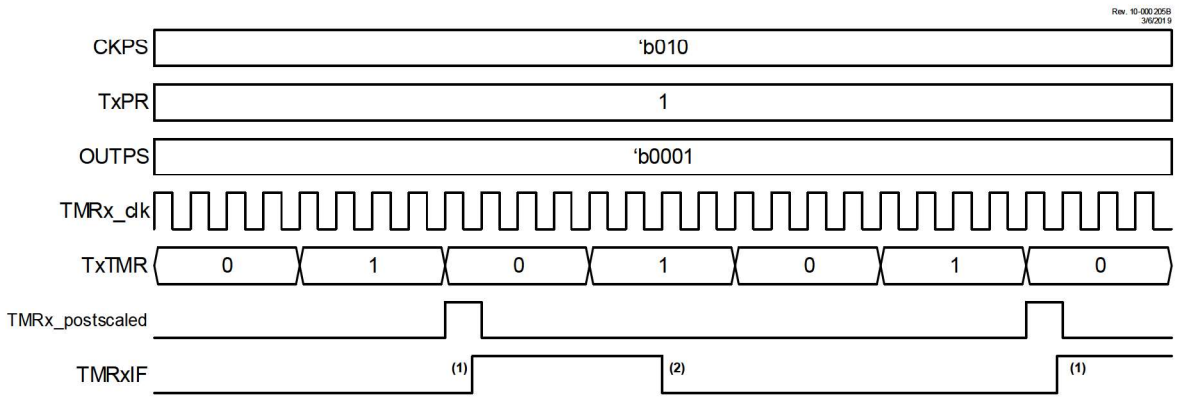

Note 1: Setting the interrupt flag is synchronized with the instruction clock. Synchronization may take as many as 2 instruction cycles
2: Cleared by software.

26.5 PSYNC bit

Setting the PSYNC bit synchronizes the prescaler output to $F_{OSC}/4$. Setting this bit is required for reading the Timer2 counter register while the selected Timer clock is asynchronous to $F_{OSC}/4$.

Note: Setting PSYNC requires that the output of the prescaler is slower than $F_{OSC}/4$. Setting PSYNC when the output of the prescaler is greater than or equal to $F_{OSC}/4$ may cause unexpected results.

26.6 CSYNC bit

All bits in the Timer2 SFRs are synchronized to $F_{OSC}/4$ by default, not the Timer2 input clock. As such, if the Timer2 input clock is not synchronized to $F_{OSC}/4$, it is possible for the Timer2 input clock to transition at the same time as the ON bit is set in software, which may cause undesirable behavior and glitches in the counter. Setting the CSYNC bit remedies this problem by synchronizing the ON bit to the Timer2 input clock instead of $F_{OSC}/4$. However, as this synchronization uses an edge of the TMR2 input clock, up to one input clock cycle will be consumed and not counted by the Timer2 when CSYNC is set. Conversely, clearing the CSYNC bit synchronizes the ON bit to $F_{OSC}/4$, which does not consume any clock edges, but has the previously stated risk of glitches.

26.7 Operating Modes

The mode of the timer is controlled by the MODE bits. Edge-Triggered modes require six Timer clock periods between external triggers. Level-Triggered modes require the triggering level to be at least three Timer clock periods long. External triggers are ignored while in Debug mode.

Table 26-1. Operating Modes Table

Mode	MODE		Output Operation	Operation	Timer Control		
	[4:3]	[2:0]			Start	Reset	Stop
Free-Running Period	00	000	Period Pulse	Software gate (Figure 26-3)	ON = 1	—	ON = 0
		001		Hardware gate, active-high (Figure 26-4)	ON = 1 and TMRx_ers = 1	—	ON = 0 or TMRx_ers = 0
		010		Hardware gate, active-low	ON = 1 and TMRx_ers = 0	—	ON = 0 or TMRx_ers = 1
		011	Period Pulse with Hardware Reset	Rising or falling edge Reset	ON = 1	TMRx_ers ↕	ON = 0
		100		Rising edge Reset (Figure 26-5)		TMRx_ers ↑	
		101		Falling edge Reset		TMRx_ers ↓	
		110		Low level Reset		TMRx_ers = 0	ON = 0 or TMRx_ers = 0
		111		High level Reset (Figure 26-6)		TMRx_ers = 1	ON = 0 or TMRx_ers = 1
One-shot	01	000	One-shot	Software start (Figure 26-7)	ON = 1	—	ON = 0 or Next clock after TxTMR = TxPR (Note 2)
		001	Edge-Triggered Start (Note 1)	Rising edge start (Figure 26-8)	ON = 1 and TMRx_ers ↑	—	
		010		Falling edge start	ON = 1 and TMRx_ers ↓	—	
		011		Any edge start	ON = 1 and TMRx_ers ↕	—	
		100	Edge-Triggered Start and Hardware Reset (Note 1)	Rising edge start and Rising edge Reset (Figure 26-9)	ON = 1 and TMRx_ers ↑	TMRx_ers ↑	
		101		Falling edge start and Falling edge Reset	ON = 1 and TMRx_ers ↓	TMRx_ers ↓	
		110		Rising edge start and Low level Reset (Figure 26-10)	ON = 1 and TMRx_ers ↑	TMRx_ers = 0	
		111		Falling edge start and High level Reset	ON = 1 and TMRx_ers ↓	TMRx_ers = 1	

.....continued

Mode	MODE		Output Operation	Operation	Timer Control		
	[4:3]	[2:0]			Start	Reset	Stop
Monostable	10	000	Reserved				
		001	Edge-Triggered Start (Note 1)	Rising edge start (Figure 26-11)	ON = 1 and TMRx_ers ↑	—	ON = 0 or Next clock after TxTMR = TxPR (Note 3)
		010		Falling edge start	ON = 1 and TMRx_ers ↓	—	
		011		Any edge start	ON = 1 and TMRx_ers ↕	—	
Reserved		100	Reserved				
Reserved		101	Reserved				
One-shot		110	Level Triggered Start and Hardware Reset	High level start and Low level Reset (Figure 26-12)	ON = 1 and TMRx_ers = 1	TMRx_ers = 0	ON = 0 or Held in Reset (Note 2)
		111		Low level start and High level Reset	ON = 1 and TMRx_ers = 0	TMRx_ers = 1	
Reserved	11	xxx	Reserved				

Notes:

1. If ON = 0 then an edge is required to restart the timer after ON = 1.
2. When T2TMR = T2PR then the next clock clears ON and stops T2TMR at 00h.
3. When T2TMR = T2PR then the next clock stops T2TMR at 00h but does not clear ON.

26.8 Operation Examples

Unless otherwise specified, the following notes apply to the following timing diagrams:

- Both the prescaler and postscaler are set to 1:1 (both the CKPS and OUTPS bits.)
- The diagrams illustrate any clock except $F_{OSC}/4$ and show clock-sync delays of at least two full cycles for both ON and TMRx_ers. When using $F_{OSC}/4$, the clock-sync delay is at least one instruction period for TMRx_ers; ON applies in the next instruction period.
- ON and TMRx_ers are somewhat generalized, and clock-sync delays may produce results that are slightly different than illustrated.
- The PWM Duty Cycle and PWM output are illustrated assuming that the timer is used for the PWM function of the CCP module as described in the "**PWM Overview**" section. The signals are not a part of the Timer2 module.

26.8.1 Software Gate Mode

This mode corresponds to legacy Timer2 operation. The timer increments with each clock input when ON = 1 and does not increment when ON = 0. When the TxTMR count equals the TxPR period count the timer resets on the next clock and continues counting from 0. Operation with the ON bit software controlled is illustrated in Figure 26-3. With TxPR = 5, the counter advances until TxTMR = 5, and goes to zero with the next clock.

Figure 26-3. Software Gate Mode Timing Diagram (MODE = 'b00000)

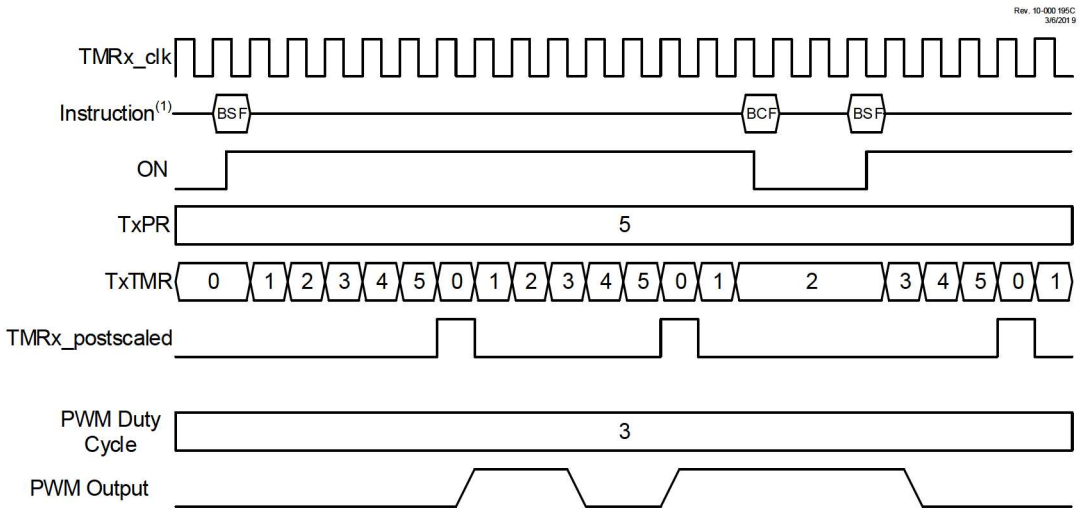

Note 1: BSF and BCF represent Bit-Set File and Bit-Clear File instructions executed by the CPU to set or clear the ON bit of TxCON. CPU execution is asynchronous to the timer clock input.

26.8.2 Hardware Gate Mode

The Hardware Gate modes operate the same as the Software Gate mode except the TMRx_ers external signal can also gate the timer. When used with the CCP, the gating extends the PWM period. If the timer is stopped when the PWM output is high, then the duty cycle is also extended.

When MODE = `'b00001` then the timer is stopped when the external signal is high. When MODE = `'b00010`, then the timer is stopped when the external signal is low.

Figure 26-4 illustrates the Hardware Gating mode for MODE = `'b00001` in which a high input level starts the counter.

Figure 26-4. Hardware Gate Mode Timing Diagram (MODE = `'b00001`)

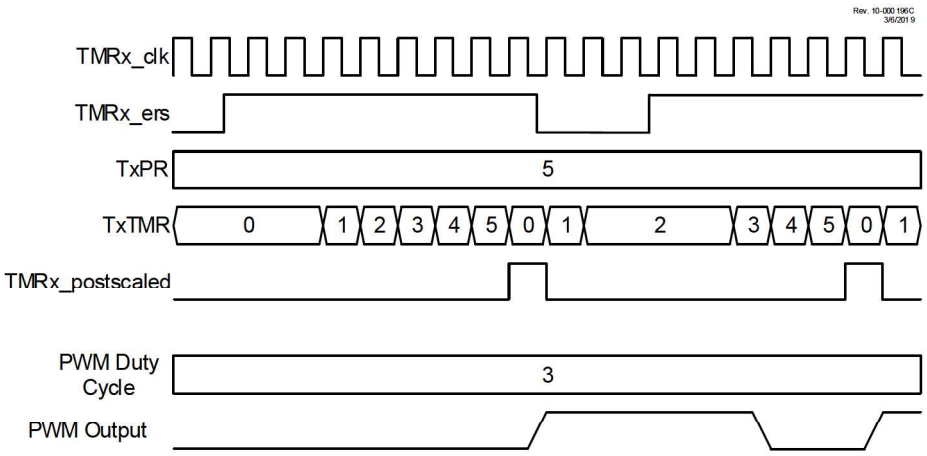

26.8.3 Edge-Triggered Hardware Limit Mode

In Hardware Limit mode, the timer can be reset by the TMRx_ers external signal before the timer reaches the period count. Three types of Resets are possible:

- Reset on rising or falling edge (MODE= 'b00011)
- Reset on rising edge (MODE = 'b00100)
- Reset on falling edge (MODE = 'b00101)

When the timer is used in conjunction with the CCP in PWM mode then an early Reset shortens the period and restarts the PWM pulse after a two clock delay. Refer to Figure 26-5.

Figure 26-5. Edge-Triggered Hardware Limit Mode Timing Diagram (MODE = 'b00100)

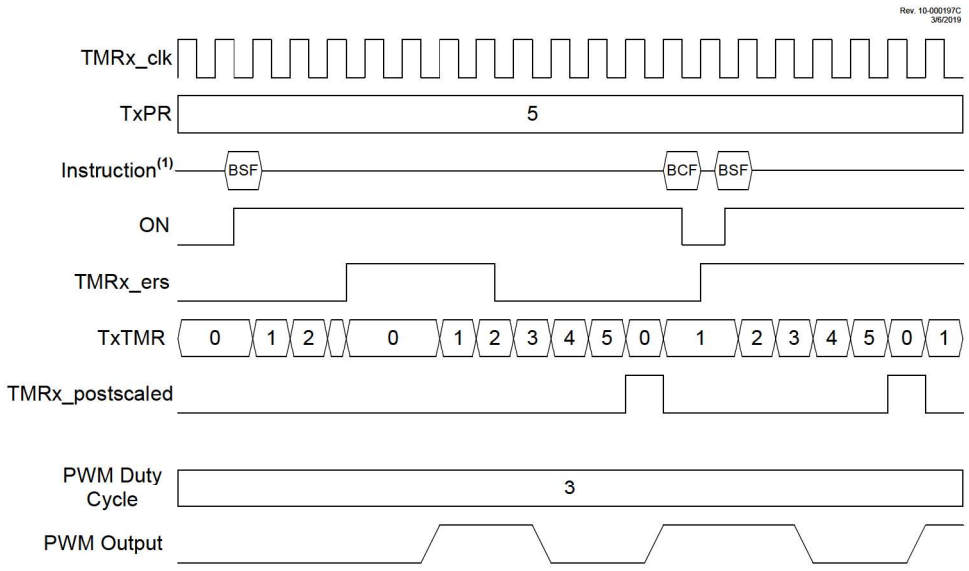

Note 1: BSF and BCF represent Bit-Set File and Bit-Clear File instructions executed by the CPU to set or clear the ON bit of TxCON. CPU execution is asynchronous to the timer clock input.

26.8.4 Level-Triggered Hardware Limit Mode

In the Level-Triggered Hardware Limit Timer modes the counter is reset by high or low levels of the external signal TMRx_ers, as shown in Figure 26-6. Selecting MODE = `'b00110` will cause the timer to reset on a low level external signal. Selecting MODE = `'b00111` will cause the timer to reset on a high level external signal. In the example, the counter is reset while TMRx_ers = `1`. ON is controlled by `BSF` and `BCF` instructions. When ON = `0` the external signal is ignored.

When the CCP uses the timer as the PWM time base then the PWM output will be set high when the timer starts counting and then set low only when the timer count matches the CCPRx value. The timer is reset when either the timer count matches the TxPR value or two clock periods after the external Reset signal goes true and stays true.

The timer starts counting, and the PWM output is set high, on either the clock following the TxPR match or two clocks after the external Reset signal relinquishes the Reset. The PWM output will remain high until the timer counts up to match the CCPRx pulse width value. If the external Reset signal goes true while the PWM output is high then the PWM output will remain high until the Reset signal is released allowing the timer to count up to match the CCPRx value.

Figure 26-6. Level-Triggered Hardware Limit Mode Timing Diagram (MODE = `'b00111`)

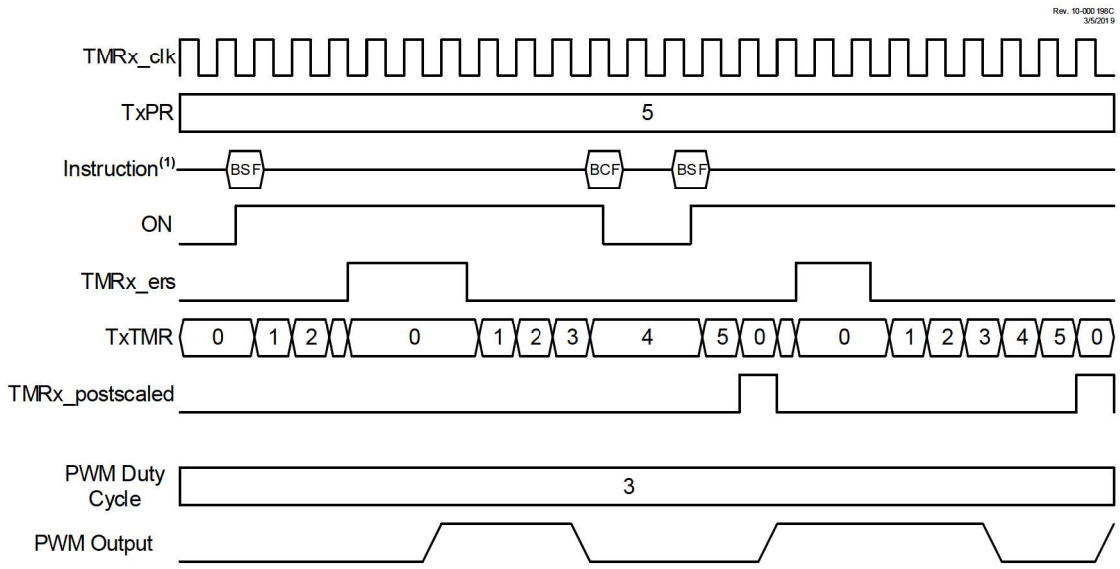

Note 1: BSF and BCF represent Bit-Set File and Bit-Clear File instructions executed by the CPU to set or clear the ON bit of TxCON. CPU execution is asynchronous to the timer clock input.

26.8.5 Software Start One-Shot Mode

In One-Shot mode the timer resets and the ON bit is cleared when the timer value matches the TxPR period value. The ON bit must be set by software to start another timer cycle. Setting MODE = `'b01000` selects One-Shot mode which is illustrated in Figure 26-7. In the example, ON is controlled by `BSF` and `BCF` instructions. In the first case, a `BSF` instruction sets ON and the counter runs to completion and clears ON. In the second case, a `BSF` instruction starts the cycle, `BCF`/`BSF` instructions turn the counter off and on during the cycle, and then it runs to completion.

When One-Shot mode is used in conjunction with the CCP PWM operation the PWM pulse drive starts concurrent with setting the ON bit. Clearing the ON bit while the PWM drive is active will extend the PWM drive. The PWM drive will terminate when the timer value matches the CCPRx pulse width value. The PWM drive will remain off until software sets the ON bit to start another cycle. If software clears the ON bit after the CCPRx match but before the TxPR match then the PWM drive will be extended by the length of time the ON bit remains cleared. Another timing cycle can only be initiated by setting the ON bit after it has been cleared by a TxPR period count match.

Figure 26-7. Software Start One-Shot Mode Timing Diagram (MODE = `'b01000`)

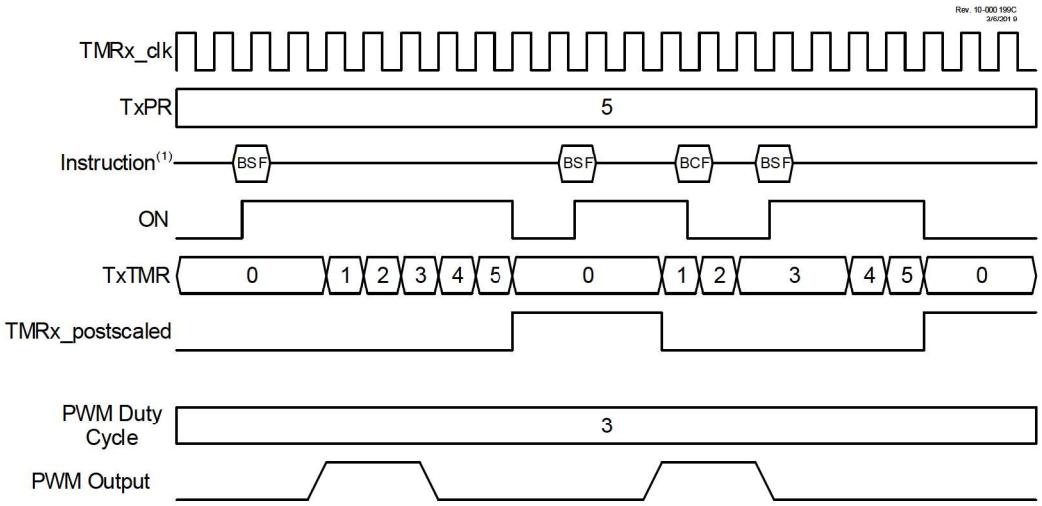

Note 1: BSF and BCF represent Bit-Set File and Bit-Clear File instructions executed by the CPU to set or clear the ON bit of TxCON. CPU execution is asynchronous to the timer clock input.

26.8.6 Edge-Triggered One-Shot Mode

The Edge-Triggered One-Shot modes start the timer on an edge from the external signal input, after the ON bit is set, and clear the ON bit when the timer matches the TxPR period value. The following edges will start the timer:

- Rising edge (MODE = 'b01001)
- Falling edge (MODE = 'b01010)
- Rising or Falling edge (MODE = 'b01011)

If the timer is halted by clearing the ON bit then another TMRx_ers edge is required after the ON bit is set to resume counting. Figure 26-8 illustrates operation in the rising edge One-Shot mode.

When Edge-Triggered One-Shot mode is used in conjunction with the CCP then the edge-trigger will activate the PWM drive and the PWM drive will deactivate when the timer matches the CCPRx pulse width value and stay deactivated when the timer halts at the TxPR period count match.

Figure 26-8. Edge-Triggered One-Shot Mode Timing Diagram (MODE = 'b01001)

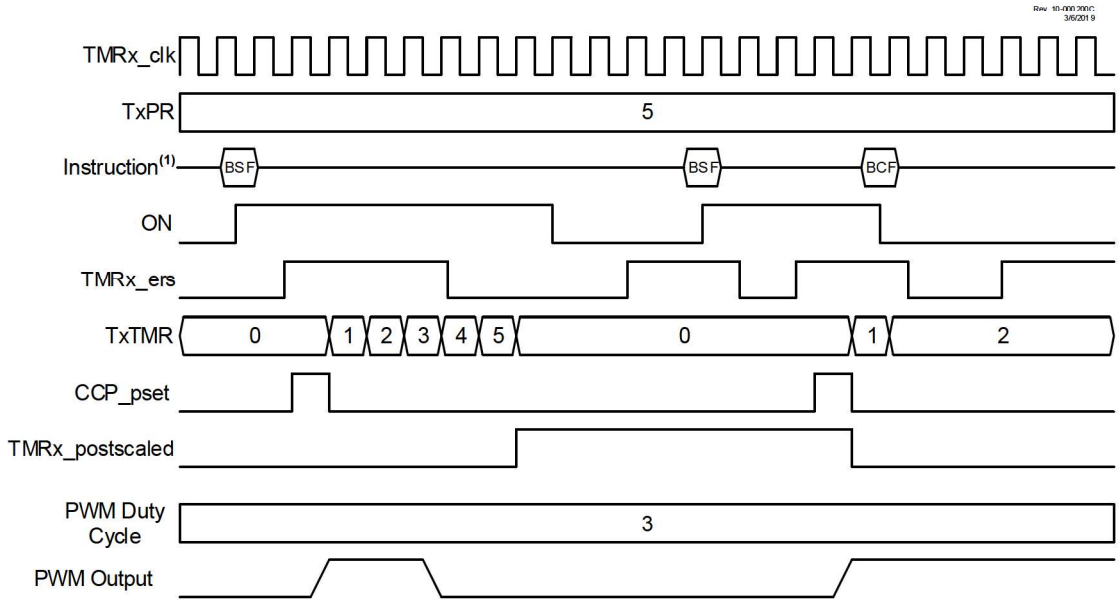

Note 1: BSF and BCF represent Bit-Set File and Bit-Clear File instructions executed by the CPU to set or clear the ON bit of TxCON. CPU execution is asynchronous to the timer clock input.

26.8.7 Edge-Triggered Hardware Limit One-Shot Mode

In Edge-Triggered Hardware Limit One-Shot modes the timer starts on the first external signal edge after the ON bit is set and resets on all subsequent edges. Only the first edge after the ON bit is set is needed to start the timer. The counter will resume counting automatically two clocks after all subsequent external Reset edges. Edge triggers are as follows:

- Rising edge start and Reset (MODE = `'b01100`)
- Falling edge start and Reset (MODE = `'b01101`)

The timer resets and clears the ON bit when the timer value matches the TxPR period value. External signal edges will have no effect until after software sets the ON bit. Figure 26-9 illustrates the rising edge hardware limit one-shot operation.

When this mode is used in conjunction with the CCP then the first starting edge trigger, and all subsequent Reset edges, will activate the PWM drive. The PWM drive will deactivate when the timer matches the CCPRx pulse width value and stay deactivated until the timer halts at the TxPR period match unless an external signal edge resets the timer before the match occurs.

Figure 26-9. Edge-Triggered Hardware Limit One-Shot Mode Timing Diagram (MODE = `'b01100`)

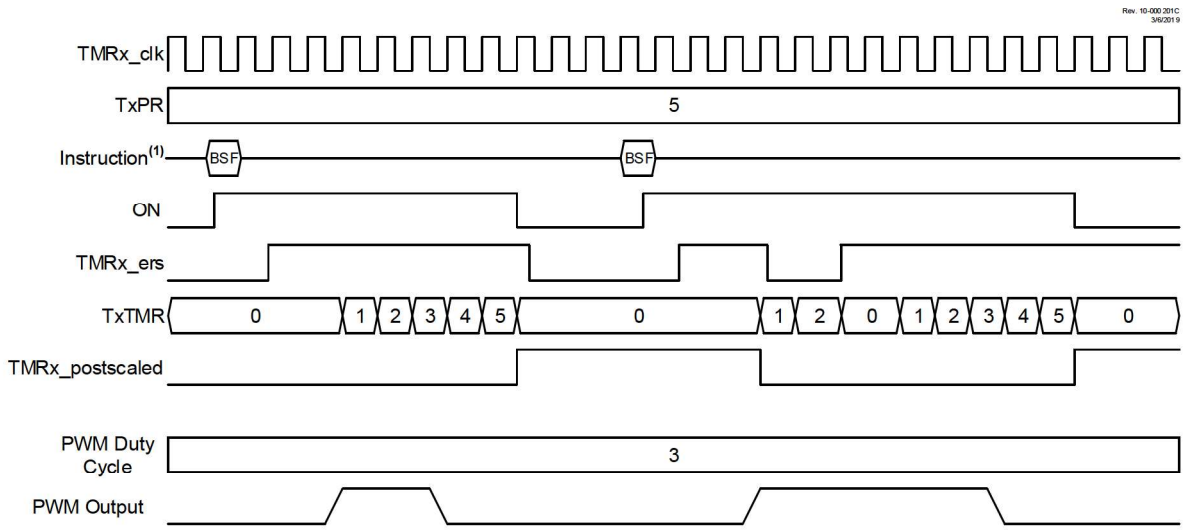

Note 1: BSF and BCF represent Bit-Set File and Bit-Clear File instructions executed by the CPU to set or clear the ON bit of TxCON. CPU execution is asynchronous to the timer clock input.

26.8.8 Level Reset, Edge-Triggered Hardware Limit One-Shot Modes

In Level-Triggered One-Shot mode the timer count is reset on the external signal level and starts counting on the rising/falling edge of the transition from Reset level to the active level while the ON bit is set. Reset levels are selected as follows:

- Low Reset level (MODE = 'b01110)
- High Reset level (MODE = 'b01111)

When the timer count matches the TxPR period count, the timer is reset and the ON bit is cleared. When the ON bit is cleared by either a TxPR match or by software control, a new external signal edge is required after the ON bit is set to start the counter.

When Level-Triggered Reset One-Shot mode is used in conjunction with the CCP PWM operation, the PWM drive goes active with the external signal edge that starts the timer. The PWM drive goes inactive when the timer count equals the CCPRx pulse width count. The PWM drive does not go active when the timer count clears at the TxPR period count match.

Figure 26-10. Low Level Reset, Edge-Triggered Hardware Limit One-Shot Mode Timing Diagram (MODE = 'b01110)

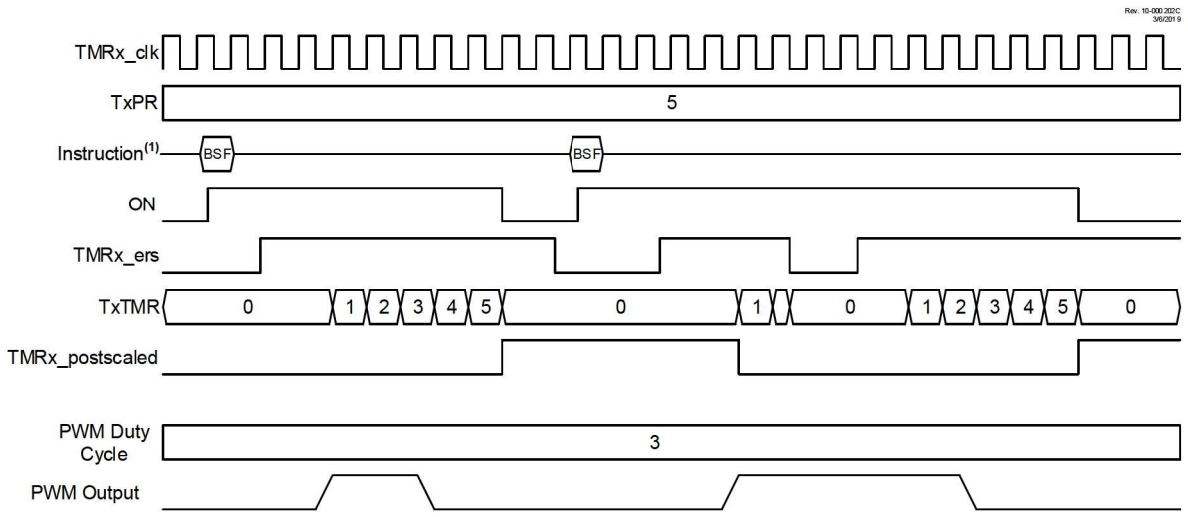

Note 1: BSF and BCF represent Bit-Set File and Bit-Clear File instructions executed by the CPU to set or clear the ON bit of TxCON. CPU execution is asynchronous to the timer clock input.

26.8.9 Edge-Triggered Monostable Modes

The Edge-Triggered Monostable modes start the timer on an edge from the external Reset signal input, after the ON bit is set, and stop incrementing the timer when the timer matches the TxPR period value. The following edges will start the timer:

- Rising edge (MODE = 'b10001)
- Falling edge (MODE = 'b10010)
- Rising or Falling edge (MODE = 'b10011)

When an Edge-Triggered Monostable mode is used in conjunction with the CCP PWM operation, the PWM drive goes active with the external Reset signal edge that starts the timer, but will not go active when the timer matches the TxPR value. While the timer is incrementing, additional edges on the external Reset signal will not affect the CCP PWM.

Figure 26-11. Rising Edge-Triggered Monostable Mode Timing Diagram (MODE = 'b10001)

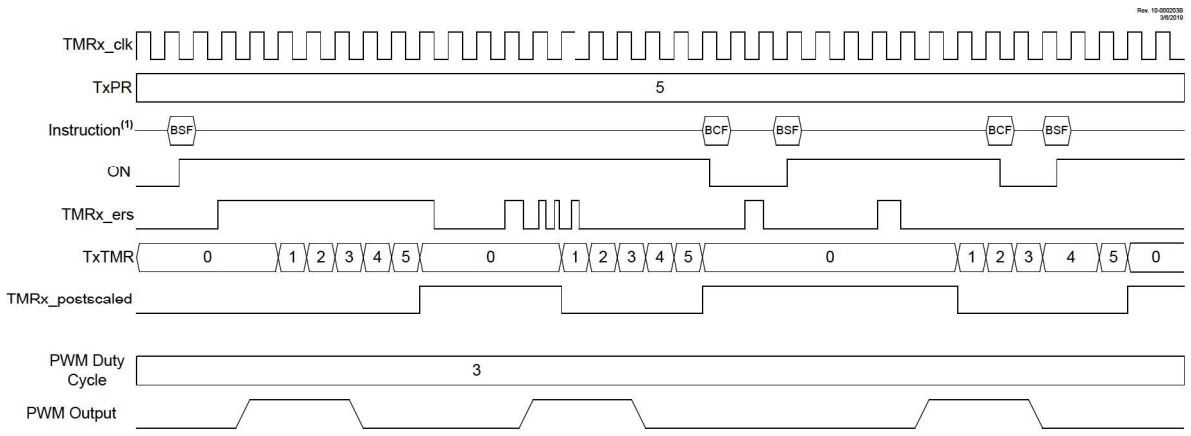

Note 1: BSF and BCF represent Bit-Set File and Bit-Clear File instructions executed by the CPU to set or clear the ON bit of TxCON. CPU execution is asynchronous to the timer clock input.

26.8.10 Level-Triggered Hardware Limit One-Shot Modes

The Level-Triggered Hardware Limit One-Shot modes hold the timer in Reset on an external Reset level and start counting when both the ON bit is set and the external signal is not at the Reset level. If one of either the external signal is not in Reset or the ON bit is set, then the other signal being set/made active will start the timer. Reset levels are selected as follows:

- Low Reset level (MODE = 'b10110)
- High Reset level (MODE = 'b10111)

When the timer count matches the TxPR period count, the timer is reset and the ON bit is cleared. When the ON bit is cleared by either a TxPR match or by software control, the timer will stay in Reset until both the ON bit is set and the external signal is not at the Reset level.

When Level-Triggered Hardware Limit One-Shot modes are used in conjunction with the CCP PWM operation, the PWM drive goes active with either the external signal edge or the setting of the ON bit, whichever of the two starts the timer.

Figure 26-12. Level-Triggered hardware Limit One-Shot Mode Timing Diagram (MODE = 'b10110)

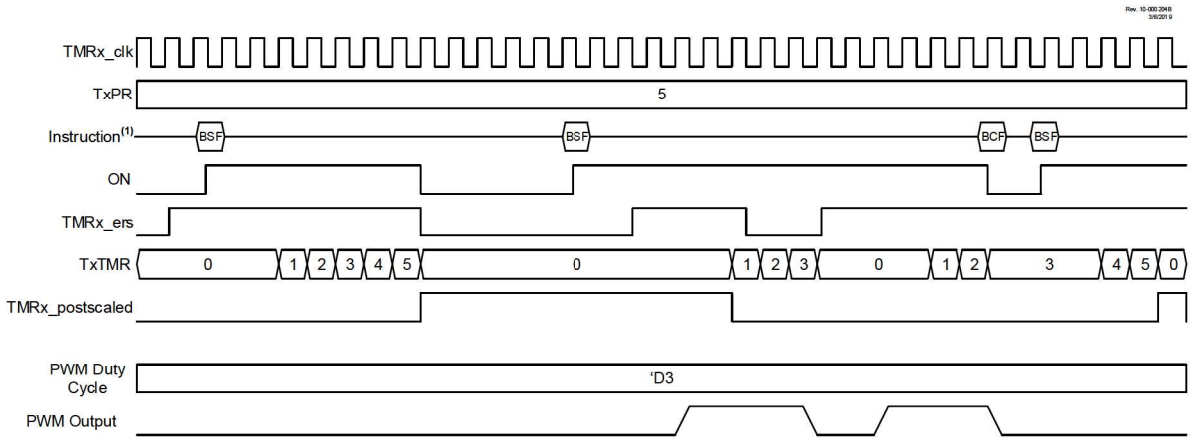

Note 1: BSF and BCF represent Bit-Set File and Bit-Clear File instructions executed by the CPU to set or clear the ON bit of TxCON. CPU execution is asynchronous to the timer clock input.

26.9 Timer2 Operation During Sleep

When PSYNC = 1, Timer2 cannot be operated while the processor is in Sleep mode. The contents of the T2TMR and T2PR registers will remain unchanged while processor is in Sleep mode.

When PSYNC = 0, Timer2 will operate in Sleep as long as the clock source selected is also still running. If any internal oscillator is selected as the clock source, it will stay active during Sleep mode.

26.10 Register Definitions: Timer2 Control

Long bit name prefixes for the Timer2 peripherals are shown in table below. Refer to the **"Long Bit Names"** section in the **"Register and Bit Naming Conventions"** chapter for more information.

Table 26-2. Timer2 long bit name prefixes

Peripheral	Bit Name Prefix
Timer2	T2
Timer4	T4

Notice: References to module Timer2 apply to all the even numbered timers on this device. (Timer2, Timer4, etc.)

26.10.1 TxTMR

Name: TxTMR
Address: 0x31C,0x329

Timer Counter Register

Bit	7	6	5	4	3	2	1	0
	TxTMR[7:0]							
Access	R/W	R/W	R/W	R/W	R/W	R/W	R/W	R/W
Reset	0	0	0	0	0	0	0	0

Bits 7:0 – TxTMR[7:0] Timerx Counter

26.10.2 TxPR

Name: TxPR
Address: 0x31D,0x32A

Timer Period Register

Bit	7	6	5	4	3	2	1	0
	TxPR[7:0]							
Access	R/W	R/W	R/W	R/W	R/W	R/W	R/W	R/W
Reset	1	1	1	1	1	1	1	1

Bits 7:0 – TxPR[7:0] Timer Period Register

Value	Description
0 - 255	The timer restarts at '0' when TxTMR reaches TxPR value

26.10.3 TxCON

Name: TxCON
Address: 0x31E,0x32B

Timerx Control Register

Bit	7	6	5	4	3	2	1	0
	ON	CKPS[2:0]			OUTPS[3:0]			
Access	R/W/HC	R/W	R/W	R/W	R/W	R/W	R/W	R/W
Reset	0	0	0	0	0	0	0	0

Bit 7 – ON Timer On(1)

Value	Description
1	Timer is on
0	Timer is off: all counters and state machines are reset

Bits 6:4 – CKPS[2:0] Timer Clock Prescale Select

Value	Description
111	1:128 Prescaler
110	1:64 Prescaler
101	1:32 Prescaler
100	1:16 Prescaler
011	1:8 Prescaler
010	1:4 Prescaler
001	1:2 Prescaler
000	1:1 Prescaler

Bits 3:0 – OUTPS[3:0] Timer Output Postscaler Select

Value	Description
1111	1:16 Postscaler
1110	1:15 Postscaler
1101	1:14 Postscaler
1100	1:13 Postscaler
1011	1:12 Postscaler
1010	1:11 Postscaler
1001	1:10 Postscaler
1000	1:9 Postscaler
0111	1:8 Postscaler
0110	1:7 Postscaler
0101	1:6 Postscaler
0100	1:5 Postscaler
0011	1:4 Postscaler
0010	1:3 Postscaler
0001	1:2 Postscaler
0000	1:1 Postscaler

Note:

1. In certain modes, the ON bit will be auto-cleared by hardware. See Table 26-1.

26.10.4 TxHLT

Name: TxHLT
Address: 0x31F,0x32C

Timer Hardware Limit Control Register

Bit	7	6	5	4	3	2	1	0
	PSYNC	CPOL	CSYNC	MODE[4:0]				
Access	R/W	R/W	R/W	R/W	R/W	R/W	R/W	R/W
Reset	0	0	0	0	0	0	0	0

Bit 7 – PSYNC Timer Prescaler Synchronization Enable(1, 2)

Value	Description
1	Timer Prescaler Output is synchronized to $F_{OSC}/4$
0	Timer Prescaler Output is not synchronized to $F_{OSC}/4$

Bit 6 – CPOL Timer Clock Polarity Selection(3)

Value	Description
1	Falling edge of input clock clocks timer/prescaler
0	Rising edge of input clock clocks timer/prescaler

Bit 5 – CSYNC Timer Clock Synchronization Enable(4, 5)

Value	Description
1	ON bit is synchronized to timer clock input
0	ON bit is not synchronized to timer clock input

Bits 4:0 – MODE[4:0] Timer Control Mode Selection(6, 7)

Value	Description
00000 to 11111	See Table 26-1

Notes:

1. Setting this bit ensures that reading TxTMR will return a valid data value.
2. When this bit is '1', Timer cannot operate in Sleep mode.
3. CKPOL should not be changed while ON = 1.
4. Setting this bit ensures glitch-free operation when the ON is enabled or disabled.
5. When this bit is set then the timer operation will be delayed by two input clocks after the ON bit is set.
6. Unless otherwise indicated, all modes start upon ON = 1 and stop upon ON = 0 (stops occur without affecting the value of TxTMR).
7. When TxTMR = TxPR, the next clock clears TxTMR, regardless of the operating mode.

26.10.5 TxCLKCON

Name: TxCLKCON
Address: 0x320,0x32D

Timer Clock Source Selection Register

Bit	7	6	5	4	3	2	1	0
					CS[3:0]			
Access					R/W	R/W	R/W	R/W
Reset					0	0	0	0

Bits 3:0 – CS[3:0] Timer Clock Source Selection

Table 26-3. Clock Source Selection

CS	Clock Source	
	Timer2	Timer4
1111	CLC4_OUT	
1110	CLC3_OUT	
1101	CLC2_OUT	
1100	CLC1_OUT	
1011	ZCD_OUT	
1010	NCO1_OUT	
1001	CLKREF_OUT	
1000	EXTOSC	
0111	SOSC	
0110	MFINTOSC (32 kHz)	
0101	MFINTOSC (500 kHz)	
0100	LFINTOSC	
0011	HFINTOSC	
0010	F_{OSC}	
0001	$F_{OSC}/4$	
0000	Pin selected by T2INPPS	Pin selected by T4INPPS

26.10.6 TxRST

Name: TxRST
Address: 0x321,0x32E

Timer External Reset Signal Selection Register

Bit	7	6	5	4	3	2	1	0
				RSEL[4:0]				
Access				R/W	R/W	R/W	R/W	R/W
Reset				0	0	0	0	0

Bits 4:0 – RSEL[4:0] External Reset Source Selection

Table 26-4. External Reset Sources

RSEL	Reset Source	
	TMR2	TMR4
11111 - 11000	Reserved	
10111	U3TX_Edge (Positive/Negative)	
10110	U3RX_Edge (Positive/Negative)	
10101	U2TX_Edge (Positive/Negative)	
10100	U2RX_Edge (Positive/Negative)	
10011	U1TX_Edge (Positive/Negative)	
10010	U1RX_Edge (Positive/Negative)	
10001	CLC4_OUT	
10000	CLC3_OUT	
01111	CLC2_OUT	
01110	CLC1_OUT	
01101	ZCD_OUT	
01100	CMP2_OUT	
01011	CMP1_OUT	
01010	PWM3S1P2_OUT	
01001	PWM3S1P1_OUT	
01000	PWM2S1P2_OUT	
00111	PWM2S1P1_OUT	
00110	PWM1S1P2_OUT	
00101	PWM1S1P1_OUT	
00100	CCP1_OUT	
00011	Reserved	Reserved
00010	TMR4_Postscaler_OUT	Reserved
00001	Reserved	TMR2_Postscaler_OUT
00000	Pin selected by T2INPPS	Pin selected by T4INPPS

26.11 Register Summary - Timer2

Address	Name	Bit Pos.	7	6	5	4	3	2	1	0
0x00 ... 0x031B	Reserved									
0x031C	T2TMR	7:0	T2TMR[7:0]							
0x031D	T2PR	7:0	T2PR[7:0]							
0x031E	T2CON	7:0	ON		CKPS[2:0]		OUTPS[3:0]			
0x031F	T2HLT	7:0	PSYNC	CPOL	CSYNC	MODE[4:0]				
0x0320	T2CLKCON	7:0					CS[3:0]			
0x0321	T2RST	7:0				RSEL[4:0]				
0x0322 ... 0x0328	Reserved									
0x0329	T4TMR	7:0	T4TMR[7:0]							
0x032A	T4PR	7:0	T4PR[7:0]							
0x032B	T4CON	7:0	ON		CKPS[2:0]		OUTPS[3:0]			
0x032C	T4HLT	7:0	PSYNC	CPOL	CSYNC	MODE[4:0]				
0x032D	T4CLKCON	7:0					CS[3:0]			
0x032E	T4RST	7:0				RSEL[4:0]				

27. SMT - Signal Measurement Timer

The Signal Measurement Timer (SMT) is a 24-bit counter with advanced clock and gating logic, which can be configured for measuring a variety of digital signal parameters such as pulse width, frequency and duty cycle, and the time difference between edges on two signals.

Features of the SMT include:

- 24-Bit Timer/Counter
- Two 24-Bit Measurement Capture Registers
- One 24-Bit Period Match Register
- Multi-Mode Operation, Including Relative Timing Measurement
- Interrupt-on-Period Match and Acquisition Complete
- Multiple Clock, Signal and Window Sources

Below is the block diagram for the SMT module.

Figure 27-1. Signal Measurement Timer Block Diagram

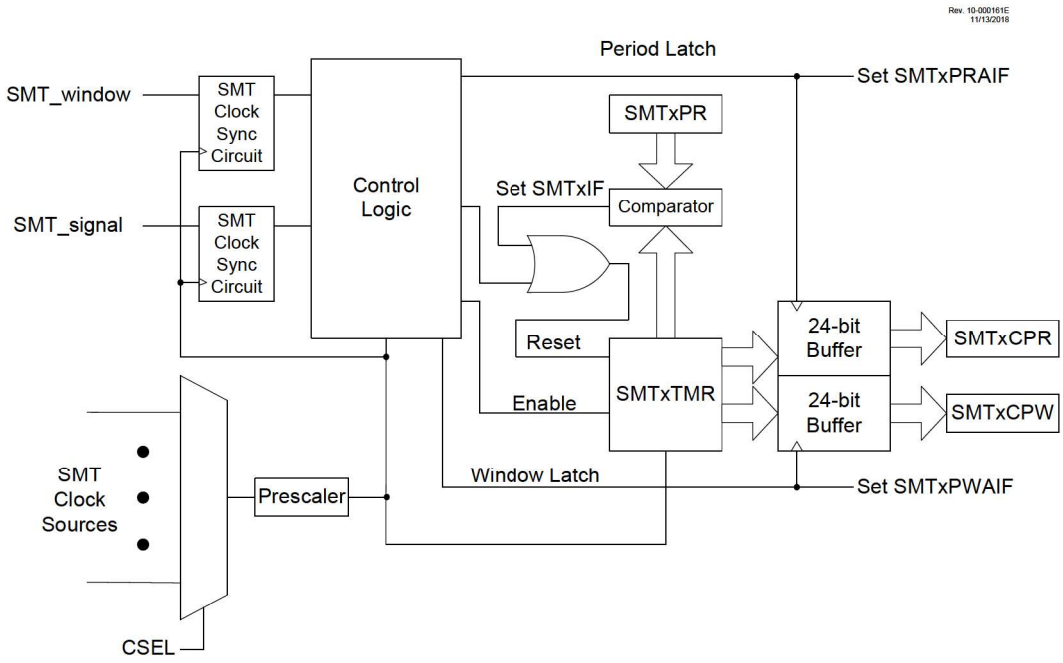

27.1 SMT Operation

27.1.1 Clock Source Selection

The SMT clock source is selected by configuring the CSEL bits. The clock source is prescaled by using the PS bits. The prescaled clock source is used to clock both the counter and any synchronization logic used by the module.

The polarity of the clock source is selected by using the CPOL bit.

27.1.2 Signal and Window Source Selection

The SMT signal and window sources are selected by configuring the SSEL bits and the WSEL bits (refer to the figure below).

The polarity of the signal and window sources is selected by using the SPOL and WPOL bits, respectively.

Figure 27-2. SMT Signal and SMT Window Source Selections

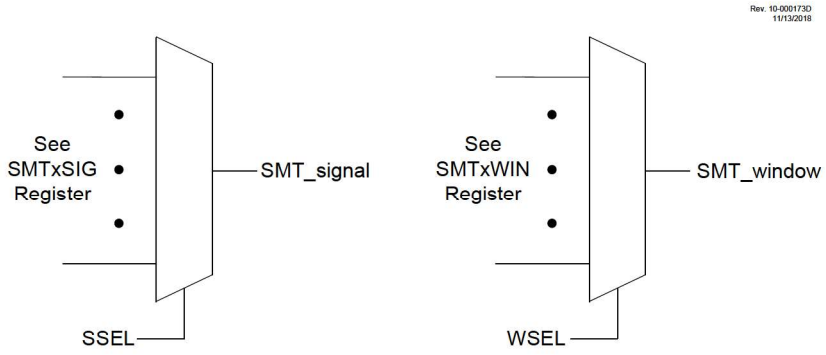

27.1.3 Time Base

The SMTxTMR register is the 24-bit counter/timer used for measurement in each of the modes of the SMT. Setting the RST bit clears the SMTxTMR register to 0x000000. It can be written to and read by software. It is not guarded for atomic access, therefore reads and writes to the SMTxTMR register should be made only when GO = 0.

The counter can be prevented from resetting at the end of the timer period by using the STP bit. When STP = 1, the SMTxTMR will stop and remain equal to the SMTxPR register. When STP = 0, the SMTxTMR register resets to 0x000000 at the end of the period.

27.1.4 Pulse Width and Period Captures

The SMTxCPW and SMTxCPR registers are used to latch in the value of the SMTxTMR register, based on the SMT mode of operation. These registers can also be updated with the current value of the SMTxTMR value by setting the CPWUP and CPRUP bits, respectively.

27.1.5 Status Information

The SMT provides input status information for the user without requiring the need to monitor the raw incoming signals.

Go Status: Timer run status is indicated by the TS bit. The TS bit is delayed in time by synchronizer delays in non-counter modes.

Signal Status: Signal status is indicated by the AS bit. This bit is used in all modes, except Window Measure, Time-of-Flight, and Capture modes, and is only valid when TS = 1. The signal status is delayed in time by synchronizer delays in non-counter modes.

Window Status: Window status is indicated by the WS bit. This bit is only used in Windowed Measure, Gated Counter, and Gated Window Measure modes, and is only valid when TS = 1. Window status is delayed in time by synchronizer delays in non-counter modes.

27.1.6 Modes of Operation

The modes of operation are summarized in the table below. The sections following the table provide descriptions and examples of how each mode can be used. Note that all waveforms assume WPOL/SPOL/CPOL = 0.

For all modes, the REPEAT bit controls whether the acquisition happens only once or is repeated. When REPEAT = 0 (Single Acquisition mode), the timer will stop incrementing and the GO bit will be cleared upon the completion of an acquisition. Otherwise, the timer will continue and allow for continued acquisitions to overwrite the previous ones, until the timer is stopped by software.

Table 27-1. Modes of Operation

MODE	Mode of operation	Synchronous operation
1111-1011	Reserved	-

.....continued

MODE	Mode of operation	Synchronous operation
1010	Windowed Counter	No
1001	Gated Counter	No
1000	Counter	No
0111	Capture	Yes
0110	Time of Flight Measurement	Yes
0101	Gated Windowed Measurement	Yes
0100	Windowed Measurement	Yes
0011	High and low time Measurement	Yes
0010	Period and Duty Cycle Measurement	Yes
0001	Gated Timer	Yes
0000	Timer	Yes

27.1.6.1 Timer Mode

Timer mode is the basic mode of operation where the SMTxTMR register is used as a 24-bit timer. No data acquisition takes place in this mode. The timer increments as long as the GO bit has been set by software. No SMT window or SMT signal events affect the GO bit. Everything is synchronized to the SMT clock source. When the timer experiences a period match (SMTxTMR = SMTxPR), the SMTxTMR register is reset and the period match interrupt is set. Refer to the figure below.

Figure 27-3. Timer Mode Timing Diagram

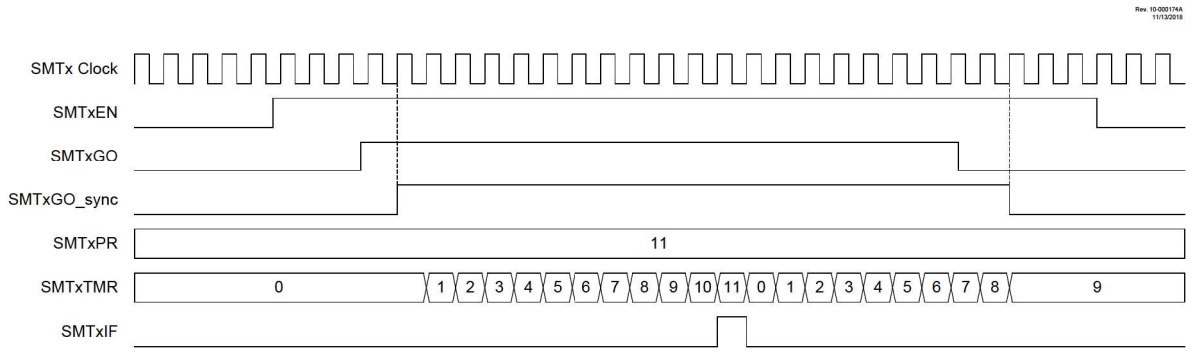

27.1.6.2 Gated Timer Mode

Gated Timer mode uses the SMT_signal input, selected with the SSEL bits, to control whether or not the SMTxTMR register will increment. Upon a falling edge of the signal, the SMTxCPW register will update to the current value of the SMTxTMR register. Example waveforms for both repeated and single acquisitions are provided in the figures below.

Figure 27-4. Gated Timer Mode, Repeat Acquisition Timing Diagram

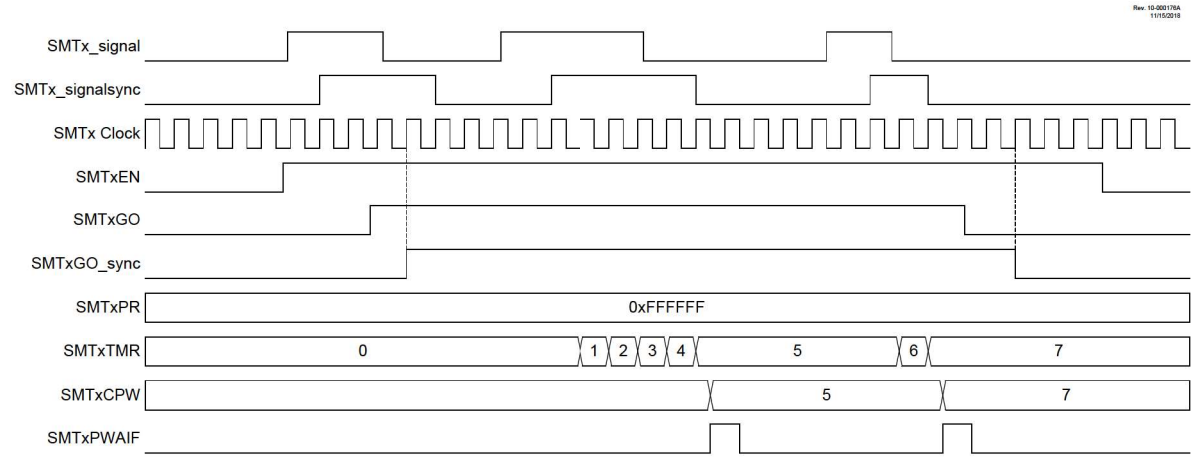

Figure 27-5. Gated Timer Mode, Single Acquisition Timing Diagram

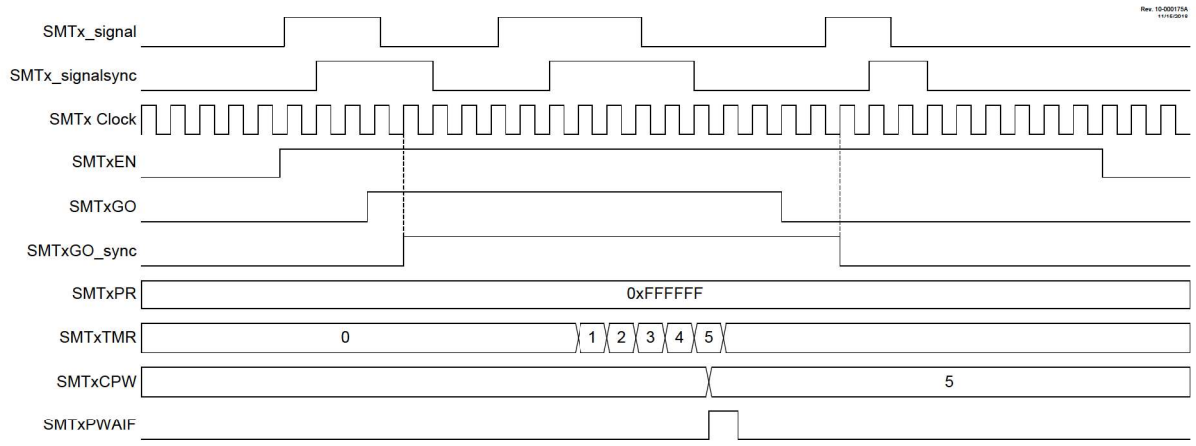

27.1.6.3 Period and Duty Cycle Measurement Mode

In this mode, either the duty cycle or period of the input signal can be acquired relative to the SMT clock. The SMTxCPW register is updated on a falling edge of the signal, and the SMTxCPR register is updated on a rising edge of the signal. The rising edge also resets the SMTxTMR register to 0x000001. The GO bit is reset on a rising edge when the SMT is in Single Acquisition mode. Refer to the figures below.

Figure 27-6. Period and Duty Cycle, Repeat Acquisition Mode Timing Diagram

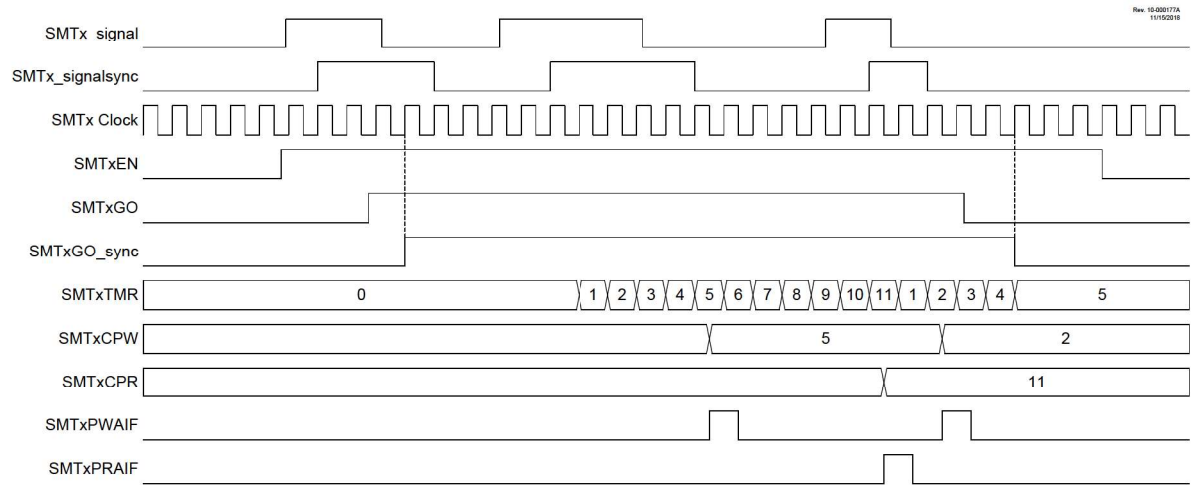

Figure 27-7. Period and Duty Cycle, Single Acquisition Mode Timing Diagram

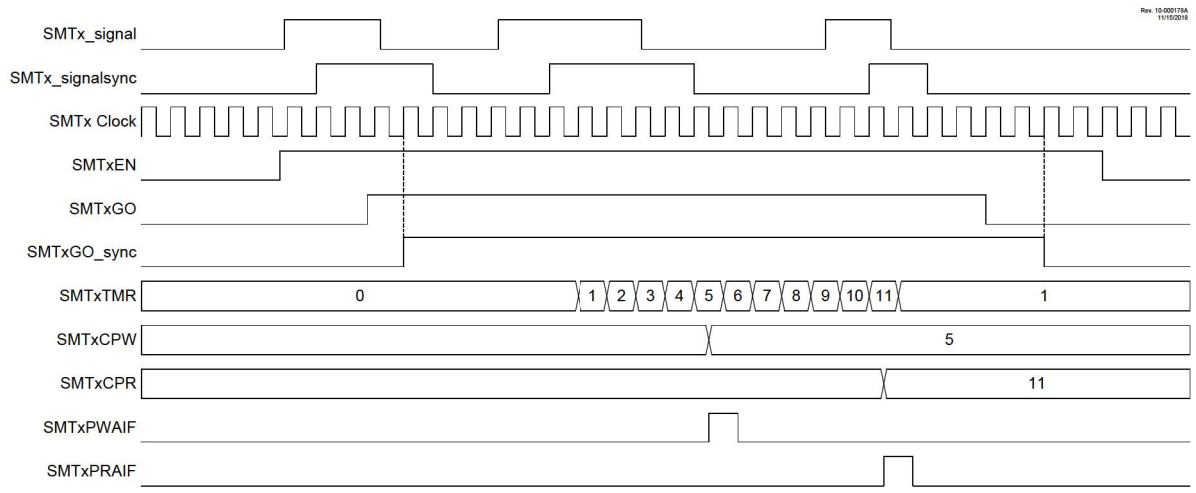

27.1.6.4 High and Low Measurement Mode

This mode measures the high and low pulse time of the SMT_signal, relative to the SMT clock. The SMTxTMR register starts incrementing on a rising edge of the input signal. On the falling edge, the SMTxTMR register value is written to the SMTxCPW register. The SMTxTMR register is then reset and continues to increment. On the next rising edge, the SMTxTMR register value is written to the SMTxCPR register. The SMTxTMR register is then reset and continues to increment. Refer to the figures below.

Figure 27-8. High and Low Measurement Mode, Repeat Acquisition Timing Diagram

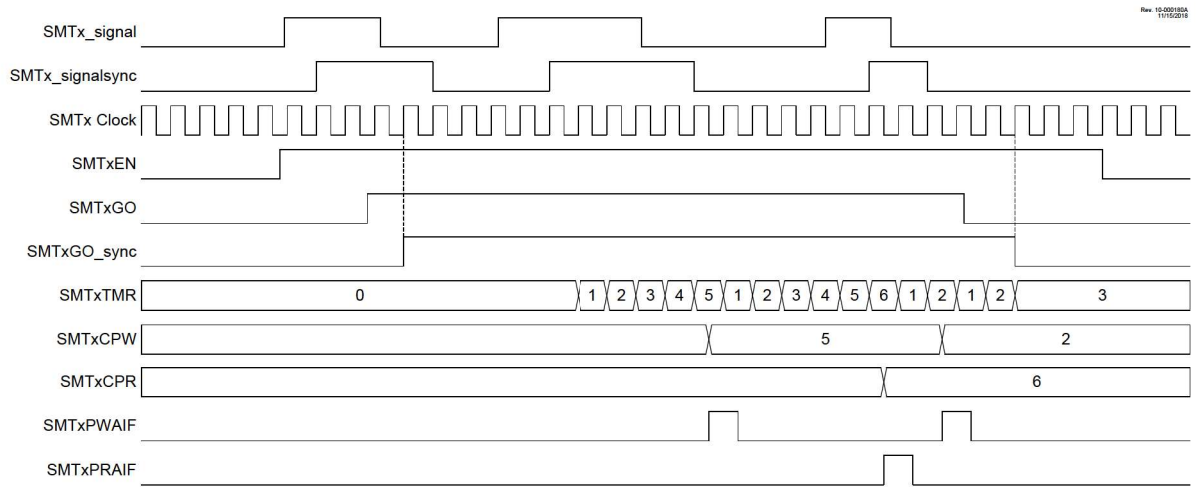

Figure 27-9. High and Low Measurement Mode, Single Acquisition Timing Diagram

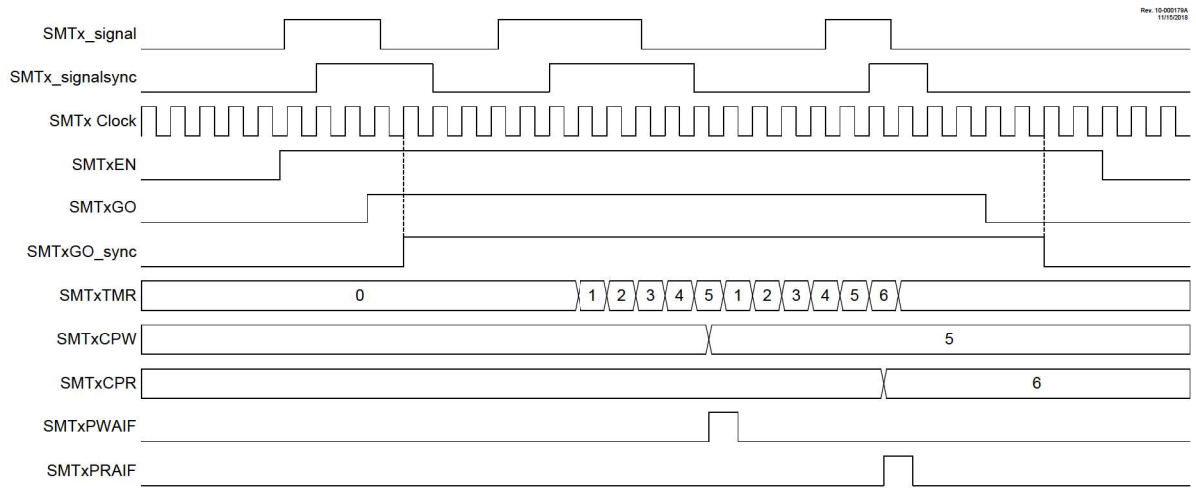

27.1.6.5 Windowed Measurement Mode

This mode measures the period of the SMT_window input, selected with the WSEL bits, relative to the SMT clock. On the rising edge of the window input, the SMTxTMR register value is written to the SMTxCPR register. In Repeat mode, the SMTxTMR register is reset and continues to increment. The capture and reset process repeats on the next rising edge. Refer to the figures below.

Figure 27-10. Windowed Measurement Mode, Repeat Acquisition Timing Diagram

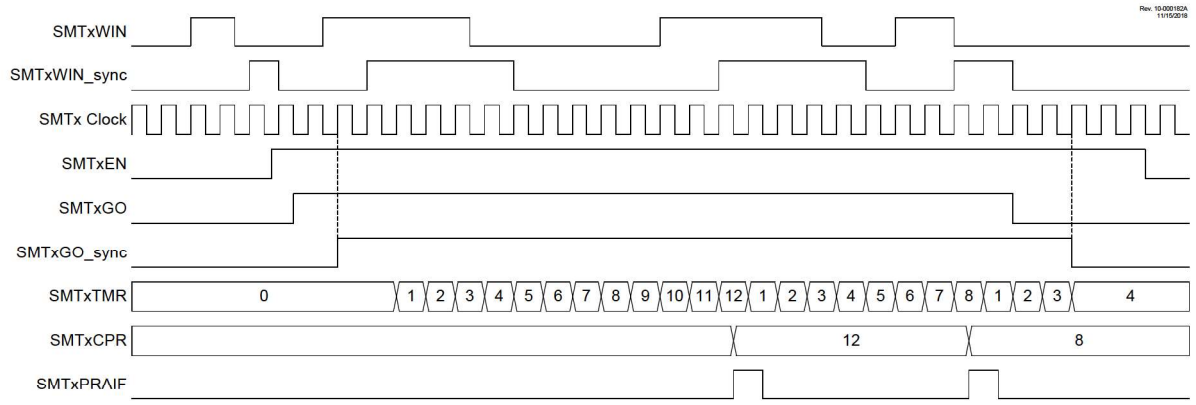

Figure 27-11. Windowed Measurement Mode, Single Acquisition Timing Diagram

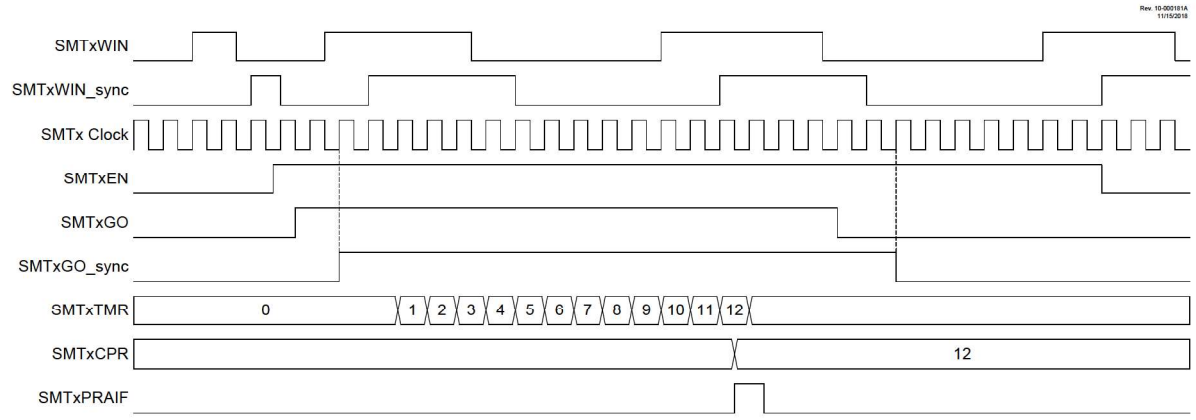

27.1.6.6 Gated Window Measurement Mode

This mode measures the duty cycle of the SMT_signal input over a known input window. It does so by incrementing the SMTxTMR register on each rising edge of the SMTx clock signal when the SMT_signal input is high. The accumulated SMTxTMR register value is written to the SMTxCPR register, and the SMTxTMR register is reset on every rising edge of the window input after the first. Refer to the figures below.

Figure 27-12. Gated Windowed Measurement Mode, Repeat Acquisition Timing Diagram

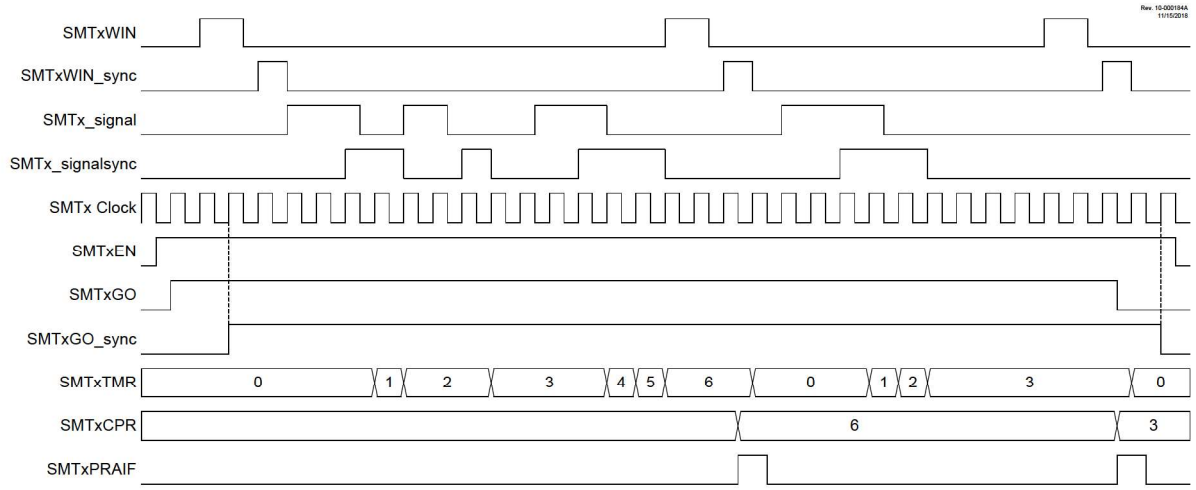

Figure 27-13. Gated Windowed Measurement Mode, Single Acquisition Timing Diagram

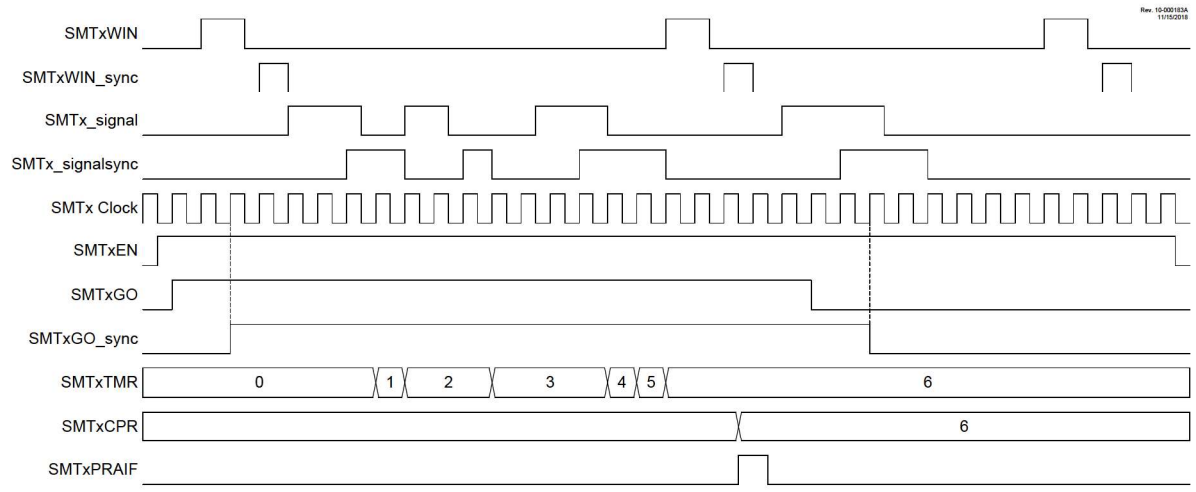

27.1.6.7 Time-of-Flight Measurement Mode

This mode measures the time interval between a rising edge on the SMT_window input and a rising edge on the SMT_signal input. The SMTxTMR register starts incrementing on the rising edge of the window input. The SMTxTMR register value is written to the SMTxCPR register and the SMTxTMR register is reset on a rising edge of the signal input. In the event of two rising edges of the window signal without a signal rising edge, the SMTxCPW register will be written with the current value of the SMTxTMR register, which will then be reset. Refer to the figures below.

Figure 27-14. Time-of-Flight Mode, Repeat Acquisition Timing Diagram

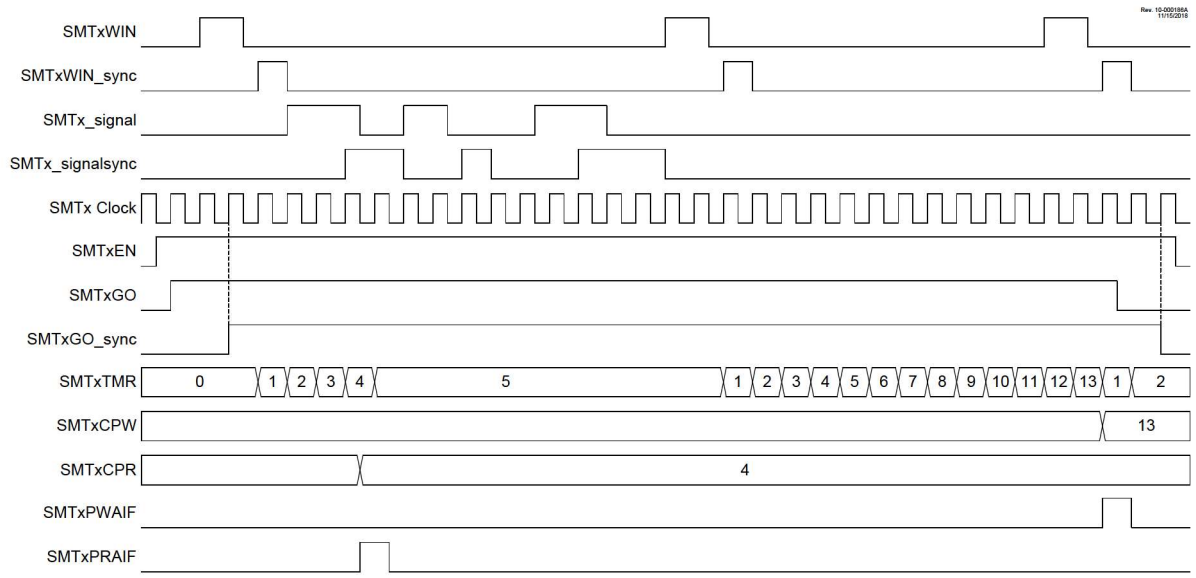

Figure 27-15. Time-of-Flight Mode, Single Acquisition Timing Diagram

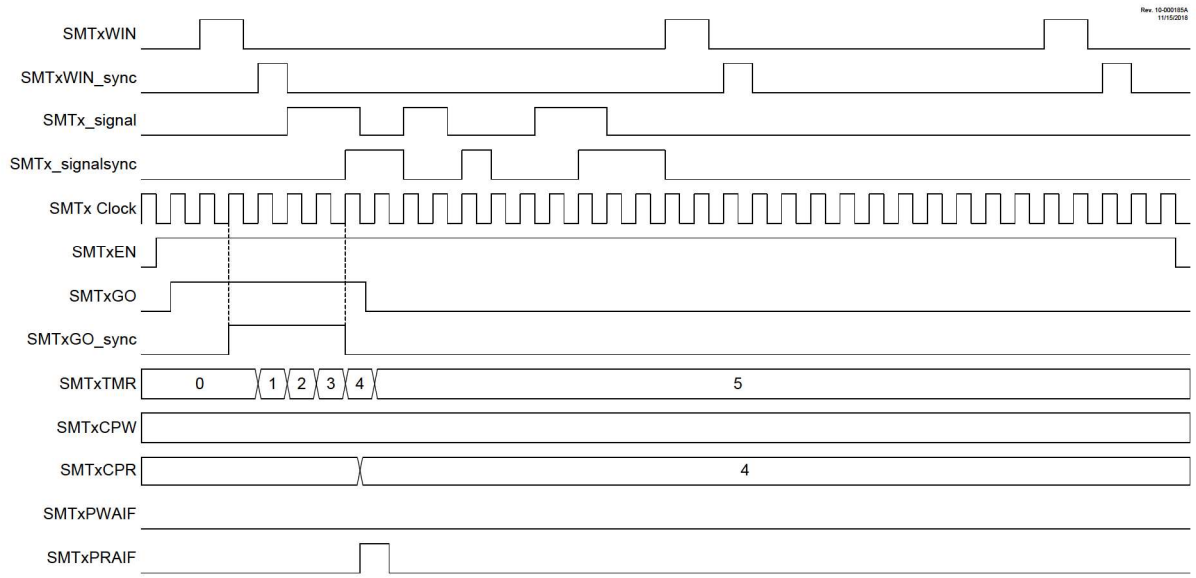

27.1.6.8 Capture Mode

This mode captures the SMTxTMR register value based on a rising or falling edge of the SMT_window input and triggers an interrupt. This mimics the capture feature of a CCP module. The timer begins incrementing upon the GO bit being set. The SMTxTMR register value is written to the SMTxCPR register on each rising edge of the SMT_window input. The SMTxTMR register value is written to the SMTxCPW register on each falling edge of the SMT_window input. The timer is not reset by any hardware conditions in this mode and must be reset by software, if desired. Refer to the figures below.

Figure 27-16. Capture Mode, Repeat Acquisition Timing Diagram

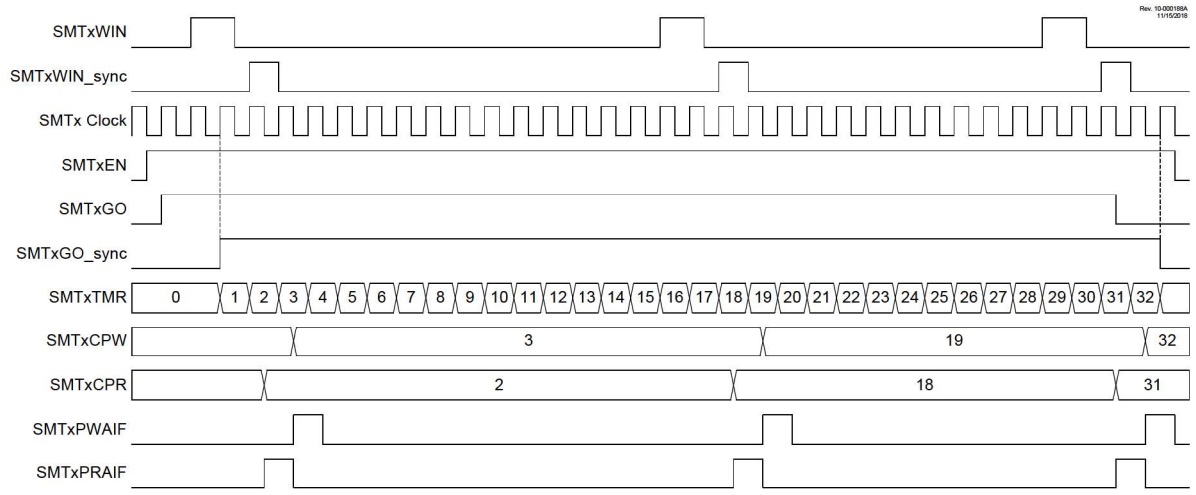

Figure 27-17. Capture Mode, Single Acquisition Timing Diagram

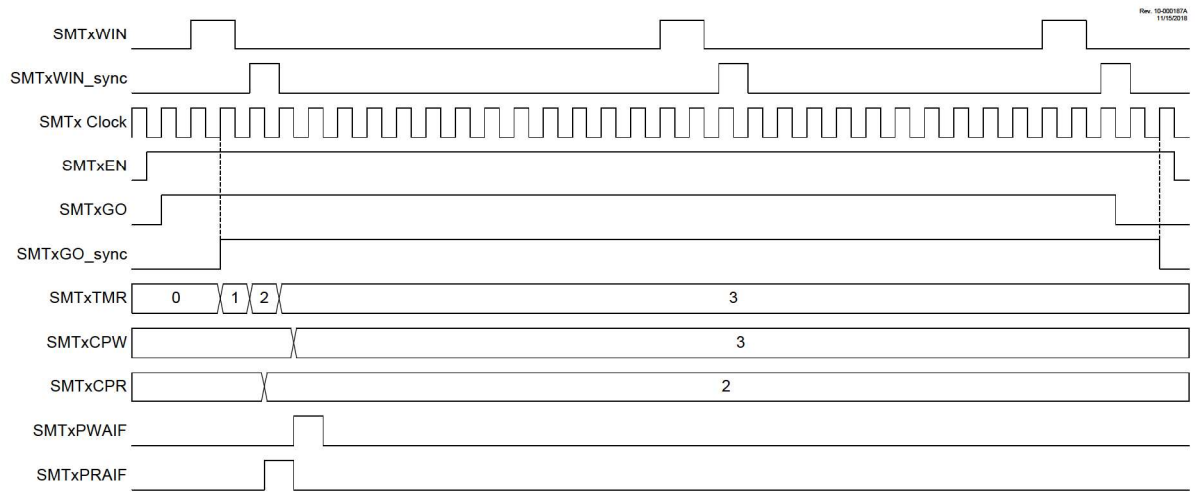

27.1.6.9 Counter Mode

This mode increments the SMTxTMR register on each rising edge of the SMT_signal input. This mode is asynchronous to the SMT clock and uses the SMT_signal input as a time source. The SMTxCPW register will be updated with the current SMTxTMR register value on the falling edge of the SMT_window input. Refer to the figure below.

Figure 27-18. Counter Mode Timing Diagram

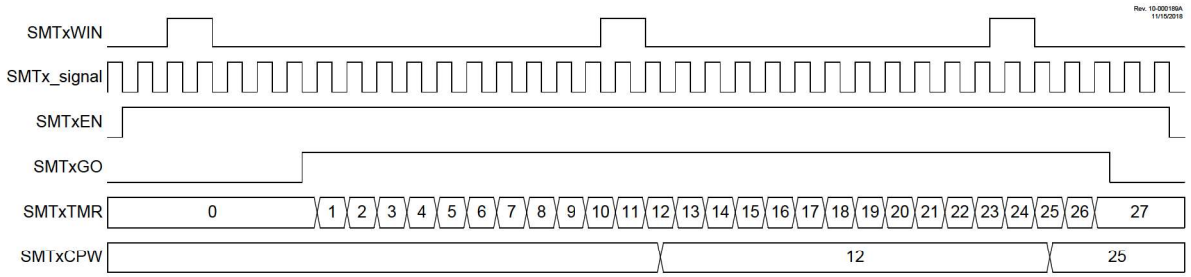

27.1.6.10 Gated Counter Mode

This mode counts rising edges on the SMT_signal input, gated by the SMT_window input. It increments the SMTxTMR register for each rising edge of the SMT_signal input while the SMT_window input is high. The SMTxTMR register value is written to the SMTxCPW register upon a falling edge of the SMT_window input. Refer to the figures below.

Figure 27-19. Gated Counter Mode, Repeat Acquisition Timing Diagram

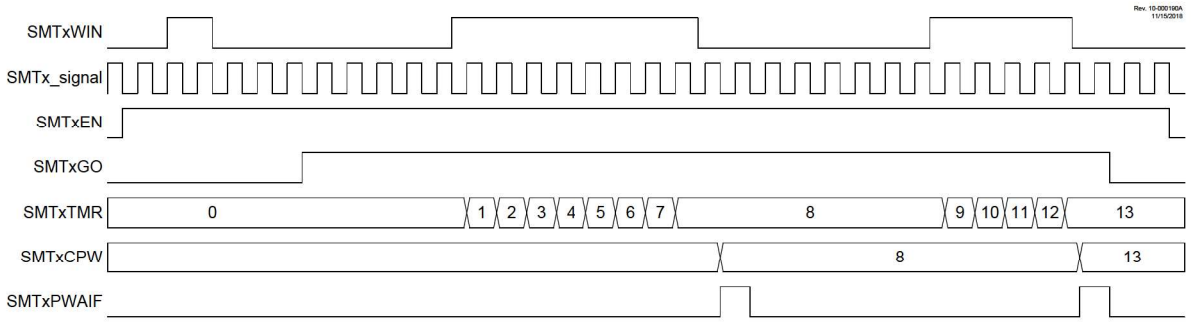

Figure 27-20. Gated Counter Mode, Single Acquisition Timing Diagram

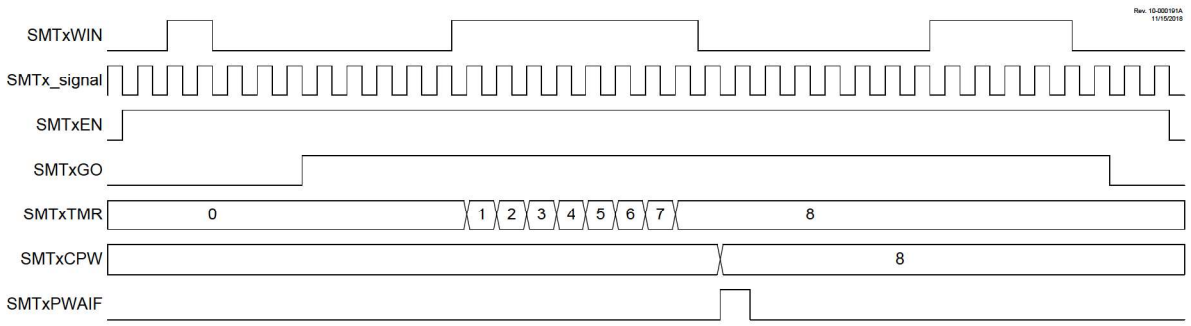

27.1.6.11 Windowed Counter Mode

This mode counts rising edges of the SMT_signal between rising edges of the SMT_window input. Beginning with the rising edge of the SMT_window input, the SMTxTMR register is incremented for every rising edge of the SMT_signal input. The SMTxTMR register value is written to the SMTxCPW register on the falling edge of the SMT_window input and the SMTxTMR register continues to increment. The SMTxTMR register value is written to the SMTxCPR register, then reset on each rising edge of the SMT_window input after the first. Refer to the figures below.

Figure 27-21. Windowed Counter Mode, Repeat Acquisition Timing Diagram

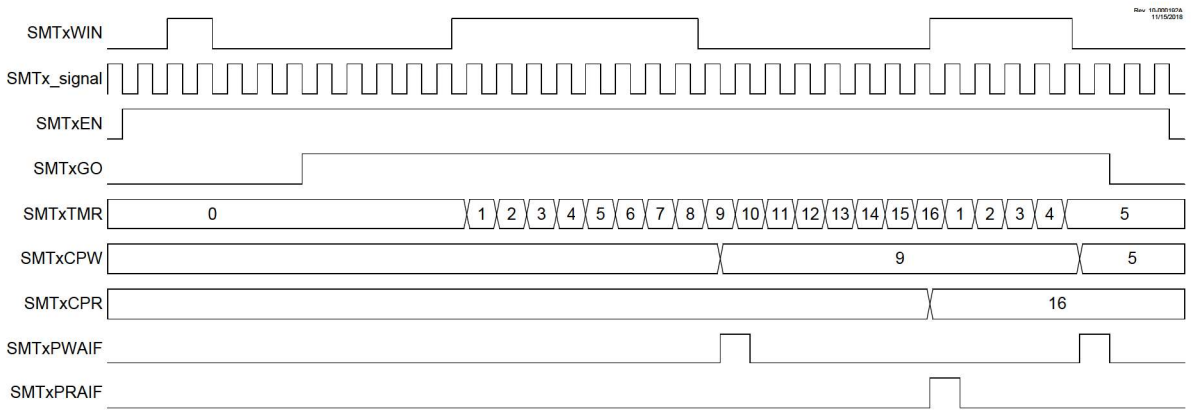

Figure 27-22. Windowed Counter Mode, Single Acquisition Timing Diagram

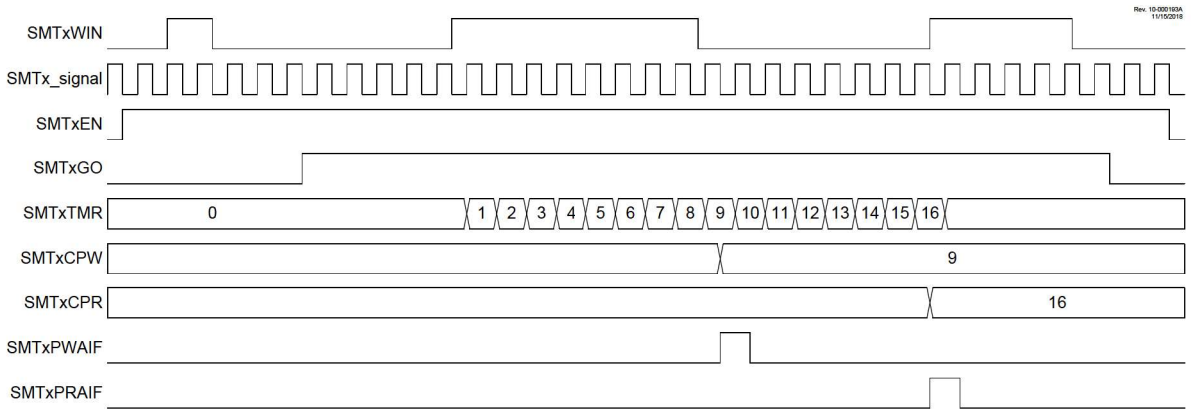

27.1.7 Interrupts

The SMT has three interrupts located in one of the PIR registers:

- **Pulse Width Acquisition Interrupt (SMTxPWAIF):** Interrupt triggers when the SMTxCPW register is updated with the SMTxTMR register value.
- **Period Acquisition Interrupt (SMTxPRAIF):** Interrupt triggers when the SMTxCPR register is updated with the SMTxTMR register value.
- **Counter Period Match Interrupt (SMTxIF):** Interrupt triggers when the SMTxTMR register equals the SMTxPR register.

Each of the above interrupts can be enabled/disabled using the corresponding bits in the PIE register.

27.1.8 Operation During Sleep

The SMT can operate during Sleep mode, provided that the clock and signal sources continue to function. In general, internal clock sources, such as HFINTOSC, continue to operate in Sleep mode when selected as the clock source, whereas external oscillators, such as F_{OSC} and $F_{OSC}/4$ cease to operate in Sleep.

27.2 Register Definitions: SMT Control

Long bit name prefixes for the SMT peripherals are shown in the table below. Replace the x in SMTx with the SMT peripheral instance number. Refer to the **"Long Bit Names"** section in the **"Register and Nit Naming Conventions"** chapter for more information.

Table 27-2. SMT Long Bit Name Prefixes

Peripheral	Bit Name Prefix
SMT1	SMT1

27.2.1 SMTxCON0

Name: SMTxCON0
Address: 0x030C

SMT Control Register 0

Bit	7	6	5	4	3	2	1	0
	EN		STP	WPOL	SPOL	CPOL	PS[1:0]	
Access	R/W		R/W	R/W	R/W	R/W	R/W	R/W
Reset	0		0	0	0	0	0	0

Bit 7 – EN SMT Enable

Value	Description
1	SMT is enabled
0	SMT is disabled; internal states are reset, clock requests are disabled

Bit 5 – STP SMT Counter Halt Enable

Value	Condition	Description
1	When SMTxTMR = SMTxPR	Counter remains at SMTxPR; period match interrupt occurs when clocked
0	When SMTxTMR = SMTxPR	Counter resets to 0x000000; period match interrupt occurs when clocked

Bit 4 – WPOL SMT_window Input Polarity Control

Value	Description
1	SMT_window input is active-low/falling edge enabled
0	SMT_window input is active-high/rising edge enabled

Bit 3 – SPOL SMT_signal Input Polarity Control

Value	Description
1	SMT_signal input is active-low/falling edge enabled
0	SMT_signal input is active-high/rising edge enabled

Bit 2 – CPOL SMT Clock Input Polarity Control

Value	Description
1	SMTxTMR increments on the falling edge of the selected clock signal
0	SMTxTMR increments on the rising edge of the selected clock signal

Bits 1:0 – PS[1:0] SMT Prescale Select

Value	Description
11	Prescaler = 1:8
10	Prescaler = 1:4
01	Prescaler = 1:2
00	Prescaler = 1:1

27.2.2 SMTxCON1

Name: SMTxCON1
Address: 0x030D

SMT Control Register 1

Bit	7	6	5	4	3	2	1	0
	GO	REPEAT			MODE[3:0]			
Access	R/W	R/W			R/W	R/W	R/W	R/W
Reset	0	0			0	0	0	0

Bit 7 – GO SMT GO Data Acquisition

Value	Description
1	Incrementing, acquiring data is enabled
0	Incrementing, acquiring data is disabled

Bit 6 – REPEAT SMT Repeat Acquisition Enable

Value	Description
1	Repeat Data Acquisition mode is enabled
0	Single Acquisition mode is enabled

Bits 3:0 – MODE[3:0] SMT Operation Mode Select

Value	Description
1111	Reserved
1110	Reserved
1101	Reserved
1100	Reserved
1011	Reserved
1010	Windowed Counter
1001	Gated Counter
1000	Counter
0111	Capture
0110	Time-of-Flight
0101	Gated Windowed Measurement
0100	Windowed Measurement
0011	High and Low Time Measurement
0010	Period and Duty-Cycle Acquisition
0001	Gated Timer
0000	Timer

27.2.3 SMTxSTAT

Name: SMTxSTAT
Address: 0x030E

SMT Status Register

Bit	7	6	5	4	3	2	1	0
	CPRUP	CPWUP		RST		TS	WS	AS
Access	R/W/HC	R/W/HC		R/W		R	R	R
Reset	0	0		0		0	0	0

Bit 7 – CPRUP SMT Manual Period Buffer Update

Value	Description
1	Request write of SMTxTMR value to SMTxCPR registers
0	SMTxCPR registers update is complete

Bit 6 – CPWUP SMT Manual Pulse Width Buffer Update

Value	Description
1	Request write of SMTxTMR value to SMTxCPW registers
0	SMTxCPW registers update is complete

Bit 4 – RST SMT Manual Timer Reset

Value	Description
1	Request Reset to SMTxTMR registers
0	SMTxTMR registers update is complete

Bit 2 – TS SMT GO Value Status

Value	Description
1	SMTxTMR is incrementing
0	SMTxTMR is not incrementing

Bit 1 – WS SMT Window Status

Value	Description
1	SMT window is open
0	SMT window is closed

Bit 0 – AS SMT Signal Value Status

Value	Description
1	SMT acquisition is in progress
0	SMT acquisition is not in progress

27.2.4 SMTxCLK

Name: SMTxCLK
Address: 0x030F

SMT Clock Selection Register

Bit	7	6	5	4	3	2	1	0
					CSEL[3:0]			
Access					R/W	R/W	R/W	R/W
Reset					0	0	0	0

Bits 3:0 – CSEL[3:0] SMT Clock Selection

CSEL Value	SOURCE	Active in Sleep
1111-1001	Reserved	No
1000	CLKR	No
0111	EXTOSC	Yes
0110	SOSC	Yes
0101	MFINTOSC (32 kHz)	Yes
0100	MFINTOSC (500 kHz)	Yes
0011	LFINTOSC	Yes
0010	HFINTOSC	Yes
0001	F_{OSC}	No
0000	$F_{OSC}/4$	No

27.2.5 SMTxWIN

Name: SMTxWIN
Address: 0x0311

SMT Window Input Select Register

Bit	7	6	5	4	3	2	1	0
				WSEL[4:0]				
Access				R/W	R/W	R/W	R/W	R/W
Reset				0	0	0	0	0

Bits 4:0 – WSEL[4:0] SMT Window Signal Selection

WSEL Value	Window Source	Active in Sleep
11111 - 11000	Reserved	No
10111	CLC4_OUT	No
10110	CLC3_OUT	No
10101	CLC2_OUT	No
10100	CLC1_OUT	No
10011	ZCD_OUT	No
10010	CMP2_OUT	No
10001	CMP1_OUT	No
10000	NCO1_OUT	No
01111	PWM3S1P2_OUT	No
01110	PWM3S1P1_OUT	No
01101	PWM2S1P2_OUT	No
01100	PWM2S1P1_OUT	No
01011	PWM1S1P2_OUT	No
01010	PWM1S1P1_OUT	No
01001	CCP1_OUT	No
01000	TMR4_Postscaler_OUT	No
00111	TMR2_Postscaler_OUT	No
00110	TMR0_OUT	No
00101	CLKREF	No
00100	EXTOSC	Yes
00011	SOSC	Yes
00010	MFINTOSC (32 kHz)	Yes
00001	LFINTOSC	Yes
00000	SMT1WINPPS	No

27.2.6 SMTxSIG

Name: SMTxSIG
Address: 0x0310

SMT Signal Selection Register

Bit	7	6	5	4	3	2	1	0
				SSEL[4:0]				
Access				R/W	R/W	R/W	R/W	R/W
Reset				0	0	0	0	0

Bits 4:0 – SSEL[4:0] SMT Signal Selection

SSEL Value	Source
11111 - 10101	Reserved
10100	CLC4_OUT
10011	CLC3_OUT
10010	CLC2_OUT
10001	CLC1_OUT
10000	ZCD_OUT
01111	CMP2_OUT
01110	CMP1_OUT
01101	NCO1_OUT
01100	PWM3S1P2_OUT
01011	PWM3S1P1_OUT
01010	PWM2S1P2_OUT
01001	PWM2S1P1_OUT
01000	PWM1S1P2_OUT
00111	PWM1S1P1_OUT
00110	CCP1_OUT
00101	TMR4_Postscaler_OUT
00100	TMR3_OUT
00011	TMR2_Postscaler_OUT
00010	TMR1_OUT
00001	TMR0_OUT
00000	SMT1SIGPPS

27.2.7 SMTxTMR

Name: SMTxTMR
Address: 0x0300

SMT Timer Register

Bit	23	22	21	20	19	18	17	16
	TMR[23:16]							
Access	R/W	R/W	R/W	R/W	R/W	R/W	R/W	R/W
Reset	0	0	0	0	0	0	0	0

Bit	15	14	13	12	11	10	9	8
	TMR[15:8]							
Access	R/W	R/W	R/W	R/W	R/W	R/W	R/W	R/W
Reset	0	0	0	0	0	0	0	0

Bit	7	6	5	4	3	2	1	0
	TMR[7:0]							
Access	R/W	R/W	R/W	R/W	R/W	R/W	R/W	R/W
Reset	0	0	0	0	0	0	0	0

Bits 23:0 – TMR[23:0] SMT Timer Value

Notes: The individual bytes in this multi-byte register can be accessed with the following register names:

- SMTxTMRU: Accesses the upper byte TMR[23:16]
- SMTxTMRH: Accesses the high byte TMR[15:8]
- SMTxTMRL: Accesses the low byte TMR[7:0]

27.2.8 SMTxCPR

Name: SMTxCPR
Address: 0x0303

SMT Captured Period Register

Bit	23	22	21	20	19	18	17	16
	CPR[23:16]							
Access	R	R	R	R	R	R	R	R
Reset	x	x	x	x	x	x	x	x

Bit	15	14	13	12	11	10	9	8
	CPR[15:8]							
Access	R	R	R	R	R	R	R	R
Reset	x	x	x	x	x	x	x	x

Bit	7	6	5	4	3	2	1	0
	CPR[7:0]							
Access	R	R	R	R	R	R	R	R
Reset	x	x	x	x	x	x	x	x

Bits 23:0 – CPR[23:0] SMTxTMR Value at Time of Period Capture Event
Reset States: POR/BOR = xxxxxxxxxxxxxxxxxxxxxxxx
All Other Resets = uuuuuuuuuuuuuuuuuuuuuuuu

Notes: The individual bytes in this multi-byte register can be accessed with the following register names:

- SMTxCPRU: Accesses the upper byte CPR[23:16]
- SMTxCPRH: Accesses the high byte CPR[15:8]
- SMTxCPRL: Accesses the low byte CPR[7:0]

27.2.9 SMTxCPW

Name: SMTxCPW
Address: 0x0306

SMT Captured Pulse Width Register

Bit	23	22	21	20	19	18	17	16
	CPW[23:16]							
Access	R	R	R	R	R	R	R	R
Reset	x	x	x	x	x	x	x	x

Bit	15	14	13	12	11	10	9	8
	CPW[15:8]							
Access	R	R	R	R	R	R	R	R
Reset	x	x	x	x	x	x	x	x

Bit	7	6	5	4	3	2	1	0
	CPW[7:0]							
Access	R	R	R	R	R	R	R	R
Reset	x	x	x	x	x	x	x	x

Bits 23:0 – CPW[23:0] SMTxTMR Value at Time of Capture Event
Reset States: POR/BOR = xxxxxxxxxxxxxxxxxxxxxxxx
All Other Resets = uuuuuuuuuuuuuuuuuuuuuuuu

Notes: The individual bytes in this multi-byte register can be accessed with the following register names:

- SMTxCPWU: Accesses the upper byte CPW[23:16]
- SMTxCPWH: Accesses the high byte CPW[15:8]
- SMTxCPWL: Accesses the low byte CPW[7:0]

27.2.10 SMTxPR

Name: SMTxPR
Address: 0x0309

SMT Period Register

Bit	23	22	21	20	19	18	17	16
	PR[23:16]							
Access	R/W	R/W	R/W	R/W	R/W	R/W	R/W	R/W
Reset	1	1	1	1	1	1	1	1

Bit	15	14	13	12	11	10	9	8
	PR[15:8]							
Access	R/W	R/W	R/W	R/W	R/W	R/W	R/W	R/W
Reset	1	1	1	1	1	1	1	1

Bit	7	6	5	4	3	2	1	0
	PR[7:0]							
Access	R/W	R/W	R/W	R/W	R/W	R/W	R/W	R/W
Reset	1	1	1	1	1	1	1	1

Bits 23:0 – PR[23:0] The SMTxTMR Value at Which the SMTxTMR Resets to Zero

Notes: The individual bytes in this multi-byte register can be accessed with the following register names:

- SMTxPRU: Accesses the upper byte PR[23:16]
- SMTxPRH: Accesses the high byte PR[15:8]
- SMTxPRL: Accesses the low byte PR[7:0]

27.3 Register Summary - SMT Control

Address	Name	Bit Pos.	7	6	5	4	3	2	1	0
0x00 ... 0x02FF	Reserved									
0x0300	SMT1TMR	7:0	TMR[7:0]							
		15:8	TMR[15:8]							
		23:16	TMR[23:16]							
0x0303	SMT1CPR	7:0	CPR[7:0]							
		15:8	CPR[15:8]							
		23:16	CPR[23:16]							
0x0306	SMT1CPW	7:0	CPW[7:0]							
		15:8	CPW[15:8]							
		23:16	CPW[23:16]							
0x0309	SMT1PR	7:0	PR[7:0]							
		15:8	PR[15:8]							
		23:16	PR[23:16]							
0x030C	SMT1CON0	7:0	EN		STP	WPOL	SPOL	CPOL	PS[1:0]	
0x030D	SMT1CON1	7:0	GO	REPEAT			MODE[3:0]			
0x030E	SMT1STAT	7:0	CPRUP	CPWUP		RST		TS	WS	AS
0x030F	SMT1CLK	7:0					CSEL[3:0]			
0x0310	SMT1SIG	7:0				SSEL[4:0]				
0x0311	SMT1WIN	7:0				WSEL[4:0]				

28. CCP - Capture/Compare/PWM Module

The Capture/Compare/PWM module is a peripheral that allows the user to time and control different events, and to generate Pulse-Width Modulation (PWM) signals. In Capture mode, the peripheral allows the timing of the duration of an event. The Compare mode allows the user to trigger an external event when a predetermined amount of time has expired. The PWM mode can generate Pulse-Width Modulated signals of varying frequency and duty cycle.

Each individual CCP module can select the timer source that controls the module. The default timer selection is Timer1 when using Capture/Compare mode and Timer2 when using PWM mode in the CCPx module.

It should be noted that the Capture/Compare mode operation is described with respect to Timer1 and the PWM mode operation is described with respect to Timer2 in the following sections.

The Capture and Compare functions are identical for all CCP modules.

Important: In devices with more than one CCP module, it is very important to pay close attention to the register names used. Throughout this section, the prefix “CCPx” is used as a generic replacement for specific numbering. A number placed where the “x” is in the prefix is used to distinguish between separate modules. For example, CCP1CON and CCP2CON control the same operational aspects of two completely different CCP modules.

28.1 CCP Module Configuration

Each Capture/Compare/PWM module is associated with a control register (CCPxCON), a capture input selection register (CCPxCAP) and a data register (CCPRx). The data register, in turn, is comprised of two 8-bit registers: CCPRxL (low byte) and CCPRxH (high byte).

28.1.1 CCP Modules and Timer Resources

The CCP modules utilize Timers 1 through 4 that vary with the selected mode. Various timers are available to the CCP modules in Capture, Compare or PWM modes, as shown in the table below.

Table 28-1. CCP Mode - Timer Resources

CCP Mode	Timer Resource
Capture	Timer1, Timer3
Compare	
PWM	Timer2, Timer4

The assignment of a particular timer to a module is selected as shown in the **“Capture, Compare, and PWM Timers Selection”** chapter. All of the modules may be active at once and may share the same timer resource if they are configured to operate in the same mode (Capture/Compare or PWM) at the same time.

28.1.2 Open-Drain Output Option

When operating in Output mode (the Compare or PWM modes), the drivers for the CCPx pins can be optionally configured as open-drain outputs. This feature allows the voltage level on the pin to be pulled to a higher level through an external pull-up resistor and allows the output to communicate with external circuits without the need for additional level shifters.

28.2 Capture Mode

Capture mode makes use of the 16-bit odd numbered timer resources (Timer1, Timer3, etc.) . When an event occurs on the capture source, the 16-bit CCPRx register captures and stores the 16-bit value of the TMRx register. An event is defined as one of the following and is configured by the MODE bits:

- Every falling edge of CCPx input
- Every rising edge of CCPx input
- Every 4th rising edge of CCPx input
- Every 16th rising edge of CCPx input
- Every edge of CCPx input (rising or falling)

When a capture is made, the Interrupt Request Flag bit CCPxIF of the PIRx register is set. The interrupt flag must be cleared in software. If another capture occurs before the value in the CCPRx register is read, the old captured value is overwritten by the new captured value. The following figure shows a simplified diagram of the capture operation.

Important: If an event occurs during a 2-byte read, the high and low-byte data will be from different events. It is recommended while reading the CCPRx register pair to either disable the module or read the register pair twice for data integrity.

Figure 28-1. Capture Mode Operation Block Diagram

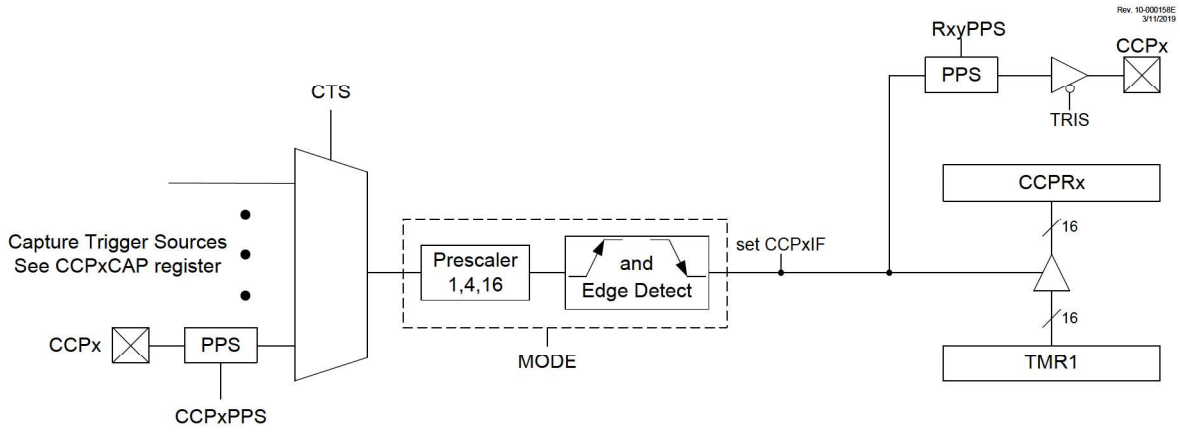

28.2.1 Capture Sources

The capture source is selected with the CTS bits.

In Capture mode, the CCPx pin should be configured as an input by setting the associated TRIS control bit.

Important: If the CCPx pin is configured as an output, a write to the port can cause a capture condition.

28.2.2 Timer1 Mode for Capture

Timer1 must be running in Timer mode or Synchronized Counter mode for the CCP module to use the capture feature. In Asynchronous Counter mode, the capture operation may not work.

See the **"TMR1 - Timer1 Module with Gate Control" Module with Gate Control"** chapter for more information on configuring Timer1.

28.2.3 Software Interrupt Mode

When the Capture mode is changed, a false capture interrupt may be generated. The user should keep the CCPxIE Interrupt Priority bit of the PIEx register clear to avoid false interrupts. Additionally, the user should clear the CCPxIF Interrupt Flag bit of the PIRx register following any change in Operating mode.

Important: Clocking Timer1 from the system clock (F_{OSC}) should not be used in Capture mode. In order for Capture mode to recognize the trigger event on the CCPx pin, Timer1 must be clocked from the instruction clock ($F_{OSC}/4$) or from an external clock source.

28.2.4 CCP Prescaler

There are four prescaler settings specified by the MODE bits. Whenever the CCP module is turned off, or the CCP module is not in Capture mode, the prescaler counter is cleared. Any Reset will clear the prescaler counter.

Switching from one capture prescaler to another does not clear the prescaler and may generate a false interrupt. To avoid this unexpected operation, turn the module off by clearing the CCPxCON register before changing the prescaler. The example below demonstrates the code to perform this function.

Example 28-1. Changing Between Capture Prescalers

```
BANKSEL CCP1CON          ;only needed when CCP1CON is not in ACCESS space
CLRF    CCP1CON          ;Turn CCP module off
MOVLW   NEW_CAPT_PS      ;CCP ON and Prescaler select → W
MOVWF   CCP1CON          ;Load CCP1CON with this value
```

28.2.5 Capture During Sleep

Capture mode depends upon the Timer1 module for proper operation. There are two options for driving the Timer1 module in Capture mode. It can be driven by the instruction clock ($F_{OSC}/4$), or by an external clock source.

When Timer1 is clocked by $F_{OSC}/4$, Timer1 will not increment during Sleep. When the device wakes from Sleep, Timer1 will continue from its previous state.

Capture mode will operate during Sleep when Timer1 is clocked by an external clock source.

28.3 Compare Mode

The Compare mode function described in this section is available and identical for all CCP modules.

Compare mode makes use of the 16-bit odd numbered Timer resources (Timer1, Timer3, etc.). The 16-bit value of the CCPRx register is constantly compared against the 16-bit value of the TMRx register. When a match occurs, one of the following events can occur:

- Toggle the CCPx output and clear TMRx
- Toggle the CCPx output without clearing TMRx
- Set the CCPx output
- Clear the CCPx output
- Generate a Pulse output
- Generate a Pulse output and clear TMRx

The action on the pin is based on the value of the MODE control bits.

All Compare modes can generate an interrupt. When MODE = 'b0001 or 'b1011, the CCP resets the TMRx register.

The following figure shows a simplified diagram of the compare operation.

Figure 28-2. Compare Mode Operation Block Diagram

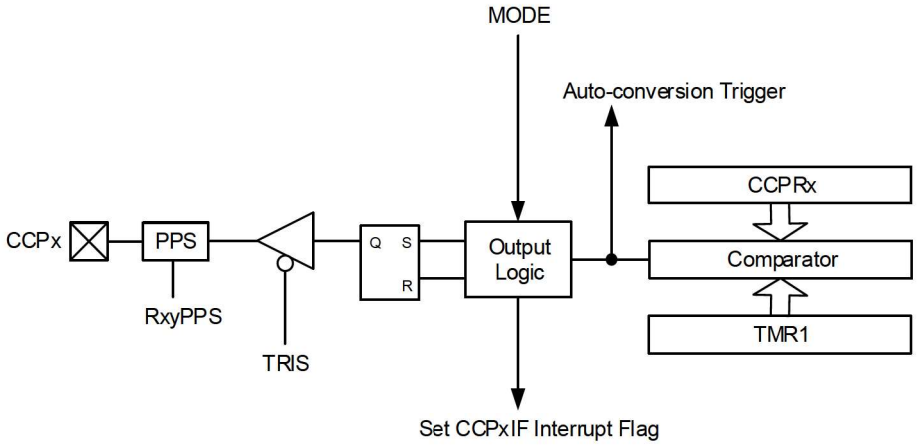

28.3.1 CCPx Pin Configuration

The CCPx pin must be configured as an output in software by clearing the associated TRIS bit and defining the appropriate output pin through the RxyPPS registers. See the **"PPS - Peripheral Pin Select Module"** chapter for more details.

The CCP output can also be used as an input for other peripherals.

Important: Clearing the CCPxCON register will force the CCPx compare output latch to the default low level. This is not the PORT I/O data latch.

28.3.2 Timer1 Mode for Compare

In Compare mode, Timer1 must be running in either Timer mode or Synchronized Counter mode. The compare operation may not work in Asynchronous Counter mode.

See the **"TMR1 - Timer1 Module with Gate Control"** chapter for more information on configuring Timer1.

Important: Clocking Timer1 from the system clock (F_{OSC}) should not be used in Compare mode. In order for Compare mode to recognize the trigger event on the CCPx pin, Timer1 must be clocked from the instruction clock ($F_{OSC}/4$) or from an external clock source.

28.3.3 Compare During Sleep

Since F_{OSC} is shut down during Sleep mode, the Compare mode will not function properly during Sleep, unless the timer is running. The device will wake on interrupt (if enabled).

28.4 PWM Overview

Pulse-Width Modulation (PWM) is a scheme that controls power to a load by switching quickly between fully ON and fully OFF states. The PWM signal resembles a square wave where the high portion of the signal is considered the ON state and the low portion of the signal is considered the OFF state. The high portion, also known as the pulse width, can vary in time and is defined in steps. A larger number of steps applied, which lengthens the pulse width, also supplies more power to the load. Lowering the number of steps applied, which shortens the pulse width, supplies less power. The PWM period is defined as the duration of one complete cycle or the total amount of ON and OFF time combined.

PWM resolution defines the maximum number of steps that can be present in a single PWM period. A higher resolution allows for more precise control of the pulse-width time and in turn the power that is applied to the load.

The term duty cycle describes the proportion of the ON time to the OFF time and is expressed in percentages, where 0% is fully OFF and 100% is fully ON. A lower duty cycle corresponds to less power applied and a higher duty cycle corresponds to more power applied. The figure below shows a typical waveform of the PWM signal.

Figure 28-3. CCP PWM Output Signal

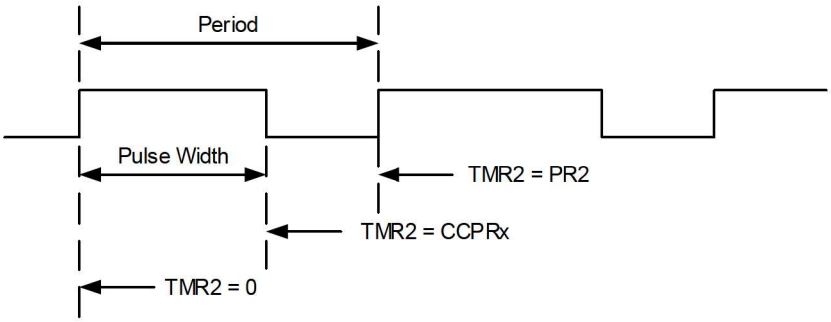

28.4.1 Standard PWM Operation

The standard PWM function described in this section is available and identical for all CCP modules. It generates a Pulse-Width Modulation (PWM) signal on the CCPx pin with up to ten bits of resolution. The period, duty cycle, and resolution are controlled by the following registers:

- Even numbered TxPR registers (T2PR, T4PR, etc.)
- Even numbered TxCON registers (T2CON, T4CON, etc.)
- 16-bit CCPRx registers
- CCPxCON registers

It is required to have $F_{OSC}/4$ as the clock input to TxTMR for correct PWM operation. The following figure shows a simplified block diagram of PWM operation.

Figure 28-4. Simplified PWM Block Diagram

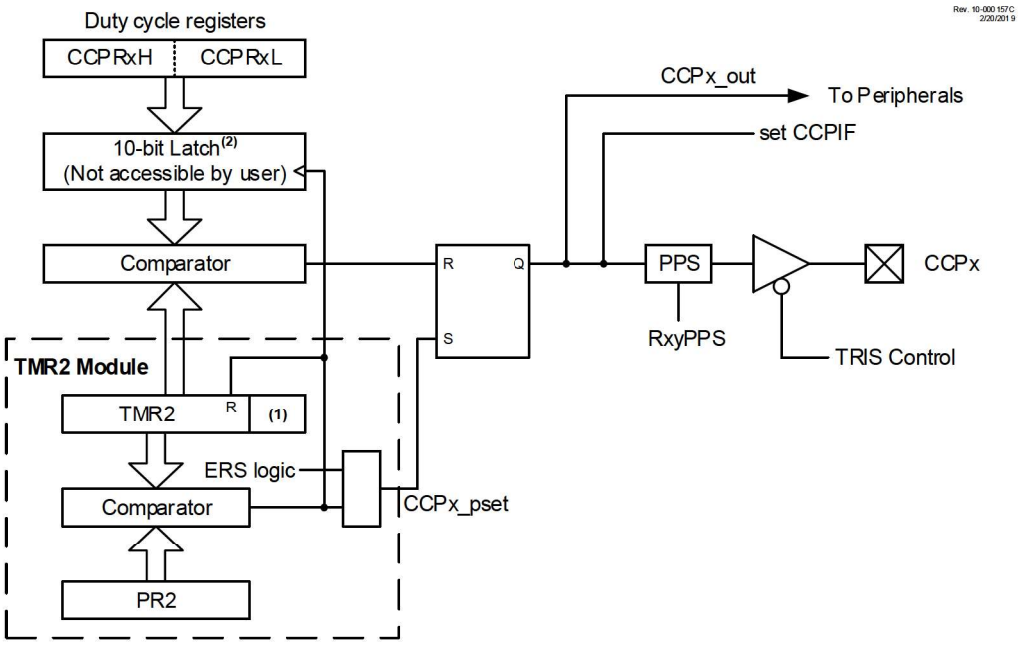

Notes: 1. 8-bit timer is concatenated with two bits generated by Fosc or two bits of the internal prescaler to create 10-bit time-base.
2. The alignment of the 10 bits from the CCPR register is determined by the CCPxFMT bit.

Important: The corresponding TRIS bit must be cleared to enable the PWM output on the CCPx pin.

28.4.2 Setup for PWM Operation

The following steps illustrate how to configure the CCP module for standard PWM operation:

1. Select the desired output pin with the RxyPPS control to select CCPx as the source. Disable the selected pin output driver by setting the associated TRIS bit. The output will be enabled later at the end of the PWM setup.
2. Load the selected timer period register TxPR register with the PWM period value.
3. Configure the CCP module for the PWM mode by loading the CCPxCON register with the appropriate values.
4. Load the CCPRx register with the PWM duty cycle value and configure the FMT bit to set the proper register alignment.
5. Configure and start the selected Timer:
   - Clear the TMRxIF Interrupt Flag bit of the PIRx register. See Note below.
   - Select the timer clock source to be as $F_{OSC}/4$. This is required for correct operation of the PWM module.
   - Configure the TxCKPS bits of the TxCON register with the desired Timer prescale value.
   - Enable the Timer by setting the TxON bit.
6. Enable the PWM output:
   - Wait until the Timer overflows and the TMRxIF bit of the PIRx register is set. See Note below.
   - Enable the CCPx pin output driver by clearing the associated TRIS bit.

Important: In order to send a complete duty cycle and period on the first PWM output, the above steps must be included in the setup sequence. If it is not critical to start with a complete PWM signal on the first output, then step 6 may be ignored.

28.4.3 Timer2 Timer Resource

The PWM standard mode makes use of the 8-bit Timer2 timer resources to specify the PWM period.

28.4.4 PWM Period

The PWM period is specified by the T2PR register of Timer2. The PWM period can be calculated using the formula in the equation below.

Equation 28-1. PWM Period

$$PWMPeriod = [(T2PR + 1)] \bullet 4 \bullet T_{OSC} \bullet (TMR2\text{Prescale}Value)$$

where $T_{OSC} = 1/F_{OSC}$

When T2TMR is equal to T2PR, the following three events occur on the next increment event:

- T2TMR is cleared
- The CCPx pin is set. (Exception: If the PWM duty cycle = 0%, the pin will not be set.)
- The PWM duty cycle is transferred from the CCPRx register into a 10-bit buffer.

Important: The Timer postscaler (see **"Timer2 Interrupt"**) is not used in the determination of the PWM frequency.

28.4.5 PWM Duty Cycle

The PWM duty cycle is specified by writing a 10-bit value to the CCPRx register. The alignment of the 10-bit value is determined by the FMT bit (see Figure 28-5). The CCPRx register can be written to at any time. However, the duty cycle value is not latched into the 10-bit buffer until after a match between T2PR and T2TMR.

The equations below are used to calculate the PWM pulse width and the PWM duty cycle ratio.

Figure 28-5. PWM 10-Bit Alignment

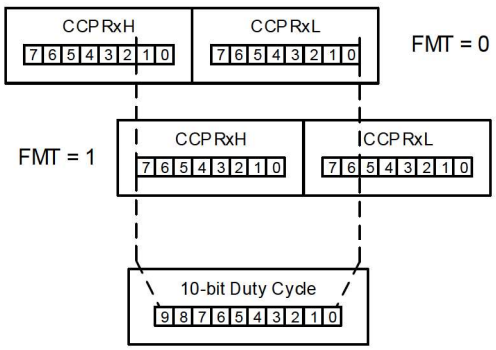

Equation 28-2. Pulse Width

$$Pulse\ Width = (CCPRxH{:}CCPRxL\ register\ value) \bullet T_{OSC} \bullet (TMR2\ \text{Prescale}\ Value)$$

Equation 28-3. Duty Cycle

$$DutyCycleRatio = \frac{(CCPRxH{:}CCPRxL\ register\ value)}{4(T2PR + 1)}$$

The CCPRx register is used to double buffer the PWM duty cycle. This double buffering is essential for glitchless PWM operation.

The 8-bit timer T2TMR register is concatenated with either the 2-bit internal system clock (F_{OSC}), or two bits of the prescaler, to create the 10-bit time base. The system clock is used if the Timer2 prescaler is set to 1:1.

When the 10-bit time base matches the CCPRx register, then the CCPx pin is cleared (see Figure 28-4).

28.4.6 PWM Resolution

The resolution determines the number of available duty cycles for a given period. For example, a 10-bit resolution will result in 1024 discrete duty cycles, whereas an 8-bit resolution will result in 256 discrete duty cycles.

The maximum PWM resolution is ten bits when T2PR is 0xFF. The resolution is a function of the T2PR register value, as shown below.

Equation 28-4. PWM Resolution

$$Resolution = \frac{\log[4(T2PR+1)]}{\log(2)} bits$$

Important: If the pulse-width value is greater than the period, the assigned PWM pin(s) will remain unchanged.

Table 28-2. Example PWM Frequencies and Resolutions (F_{OSC} = 20 MHz)

PWM Frequency	1.22 kHz	4.88 kHz	19.53 kHz	78.12 kHz	156.3 kHz	208.3 kHz
Timer Prescale	16	4	1	1	1	1
T2PR Value	0xFF	0xFF	0xFF	0x3F	0x1F	0x17
Maximum Resolution (bits)	10	10	10	8	7	6.6

Table 28-3. Example PWM Frequencies and Resolutions (F_{OSC} = 8 MHz)

PWM Frequency	1.22 kHz	4.90 kHz	19.61 kHz	76.92 kHz	153.85 kHz	200.0 kHz
Timer Prescale	16	4	1	1	1	1
T2PR Value	0x65	0x65	0x65	0x19	0x0C	0x09
Maximum Resolution (bits)	8	8	8	6	5	5

28.4.7 Operation in Sleep Mode

In Sleep mode, the T2TMR register will not increment and the state of the module will not change. If the CCPx pin is driving a value, it will continue to drive that value. When the device wakes up, T2TMR will continue from the previous state.

28.4.8 Changes in System Clock Frequency

The PWM frequency is derived from the system clock frequency. Any changes in the system clock frequency will result in changes to the PWM frequency. See the **"OSC - Oscillator Module (with Fail-Safe Clock Monitor)"** chapter for additional details.

28.4.9 Effects of Reset

Any Reset will force all ports to Input mode and the CCP registers to their Reset states.

28.5 Register Definitions: CCP Control

Long bit name prefixes for the CCP peripherals are shown in the following table. Refer to the **"Long Bit Names"** section in the **"Register and Bit Naming Conventions"** chapter for more information.

Table 28-4. CCP Long bit name prefixes

Peripheral	Bit Name Prefix
CCP1	CCP1

28.5.1 CCPxCON

Name: CCPxCON
Address: 0x0342

CCP Control Register

Bit	7	6	5	4	3	2	1	0
	EN		OUT	FMT	MODE[3:0]			
Access	R/W		R	R/W	R/W	R/W	R/W	R/W
Reset	0		x	0	0	0	0	0

Bit 7 – EN CCP Module Enable

Value	Description
1	CCP is enabled
0	CCP is disabled

Bit 5 – OUT CCP Output Data (read-only)

Bit 4 – FMT CCPW (pulse-width) Value Alignment

Value	Condition	Description
x	Capture mode	Not used
x	Compare mode	Not used
1	PWM mode	Left-aligned format
0	PWM mode	Right-aligned format

Bits 3:0 – MODE[3:0] CCP Mode Select

Table 28-5. CCPx Mode Select

MODE Value	Operating Mode	Operation	Set CCPxIF
11xx	PWM	PWM operation	Yes
1011	Compare	Pulse output; clear TMR1(2)	Yes
1010		Pulse output	Yes
1001		Clear output(1)	Yes
1000		Set output(1)	Yes
0111	Capture	Every 16th rising edge of CCPx input	Yes
0110		Every 4th rising edge of CCPx input	Yes
0101		Every rising edge of CCPx input	Yes
0100		Every falling edge of CCPx input	Yes
0011		Every edge of CCPx input	Yes
0010	Compare	Toggle output	Yes
0001		Toggle output; clear TMR1(2)	Yes
0000	Disabled		—

Notes:

1. The set and clear operations of the Compare mode are reset by setting MODE = 'b0000 or EN = 0.
2. When MODE = 'b0001 or 'b1011, then the timer associated with the CCP module is cleared. TMR1 is the default selection for the CCP module, so it is used for indication purposes only.

28.5.2 CCPxCAP

Name: CCPxCAP
Address: 0x343

Capture Trigger Input Selection Register

Bit	7	6	5	4	3	2	1	0
						CTS[2:0]		
Access						R/W	R/W	R/W
Reset						0	0	0

Bits 2:0 – CTS[2:0] Capture Trigger Input Selection

Table 28-6. Capture Trigger Sources

CTS Value	Source
111	CLC4_OUT
110	CLC3_OUT
101	CLC2_OUT
100	CLC1_OUT
011	IOC Interrupt
010	CMP2_OUT
001	CMP1_OUT
000	Pin selected by CCPxPPS

28.5.3 CCPRx

Name: CCPRx
Address: 0x340

Capture/Compare/Pulse Width Register

Bit	15	14	13	12	11	10	9	8
	CCPR[15:8]							
Access	R/W	R/W	R/W	R/W	R/W	R/W	R/W	R/W
Reset	x	x	x	x	x	x	x	x

Bit	7	6	5	4	3	2	1	0
	CCPR[7:0]							
Access	R/W	R/W	R/W	R/W	R/W	R/W	R/W	R/W
Reset	x	x	x	x	x	x	x	x

Bits 15:0 – CCPR[15:0] Capture/Compare/Pulse Width
Reset States: POR/BOR = xxxxxxxxxxxxxxxx
All other Resets = uuuuuuuuuuuuuuuu

Notes: The individual bytes in this multi-byte register can be accessed with the following register names:

- When MODE = Capture or Compare
  - CCPRxH: Accesses the high byte CCPR[15:8]
  - CCPRxL: Accesses the low byte CCPR[7:0]
- When MODE = PWM and FMT = 0
  - CCPRx[15:10]: Not used
  - CCPRxH[1:0]: Accesses the two Most Significant bits CCPR[9:8]
  - CCPRxL: Accesses the eight Least Significant bits CCPR[7:0]
- When MODE = PWM and FMT = 1
  - CCPRxH: Accesses the eight Most Significant bits CCPR[9:2]
  - CCPRxL[7:6]: Accesses the two Least Significant bits CCPR[1:0]
  - CCPRx[5:0]: Not used

28.6 Register Summary - CCP Control

Address	Name	Bit Pos.	7	6	5	4	3	2	1	0
0x00 ... 0x033F	Reserved									
0x0340	CCPRx	7:0	CCPR[7:0]							
		15:8	CCPR[15:8]							
0x0342	CCP1CON	7:0	EN		OUT	FMT	MODE[3:0]			
0x0343	CCPxCAP	7:0						CTS[2:0]		

29. Capture, Compare, and PWM Timers Selection

Each of these modules has an independent timer selection which can be accessed using the timer selection register. The default timer selection is Timer1 for capture or compare functions and Timer2 for PWM functions.

29.1 Register Definitions: Capture, Compare, and PWM Timer Selection

29.1.1 CCPTMRS0

Name: CCPTMRS0
Address: 0x34C

CCP Timers Selection Register

Bit	7	6	5	4	3	2	1	0
			C3TSEL[1:0]		C2TSEL[1:0]		C1TSEL[1:0]	
Access			R/W	R/W	R/W	R/W	R/W	R/W
Reset			0	1	0	1	0	1

Bits 0:1, 2:3, 4:5 – CnTSEL CCPn Timer Selection

CnTSEL Value	Capture/Compare	PWM
11	Reserved	
10	Timer3	Timer4
01	Timer1	Timer2
00	Reserved	

29.2 Register Summary - Capture, Compare, and PWM Timers Selection

Address	Name	Bit Pos.	7	6	5	4	3	2	1	0
0x00 ... 0x034B	Reserved									
0x034C	CCPTMRS0	7:0			C3TSEL[1:0]		C2TSEL[1:0]		C1TSEL[1:0]	

30. PWM - Pulse-Width Modulator with Compare

This module is a 16-bit Pulse-Width Modulator (PWM) with a compare feature and multiple outputs. The outputs are grouped in slices where each slice has two outputs. There can be up to four slices in each PWM module. The EN bit enables the PWM operation for all slices simultaneously. The prescale counter, postscale counter, and all internal logic is held in Reset while the EN bit is low.

Features of this module include the following:

- Five main operating modes:
  - Left Aligned
  - Right Aligned
  - Center Aligned
  - Variable Aligned
  - Compare
    - Pulsed
    - Toggled
- Push-pull operation (available in Left and Right Aligned modes only)
- Independent 16-bit period timer
- Programmable clock sources
- Programmable trigger sources for synchronous duty cycle and period changes
- Programmable synchronous/asynchronous Reset sources
- Programmable Reset source polarity control
- Programmable PWM output polarity control
- Up to four 2-output slices per module

Block diagrams of each PWM mode are shown in their respective sections.

30.1 Output Slices

A PWM module can have up to four output slices. An output slice consists of two PWM outputs, PWMx_SaP1_out and PWMx_SaP2_out. Both share the same operating mode. However, other slices may operate in a different mode. PWMx_SaP1_out and PWMx_SaP2_out have independent duty cycles which are set with the respective P1 and P2 parameter registers.

30.1.1 Output Polarity

The polarity for the PWMx_SaP1_out and PWMx_SaP2_out is controlled with the respective POL1 and POL2 bits. Setting the polarity bit inverts the output Active state to low true. Toggling the polarity bit toggles the output whether or not the PWM module is enabled.

30.1.2 Operating Modes

Each output slice can operate in one of six modes selected with the MODE bits. The Left and Right Aligned modes can also be operated in Push-Pull mode by setting the PPEN bit. The following sections provide more details on each mode including block diagrams.

30.1.2.1 Left Aligned Mode

In Left Aligned mode the active part of the duty cycle is at the beginning of the period. The outputs start active and stay active for the number of prescaled PWM clock periods specified by the P1 and P2 parameter registers then go inactive for the remainder of the period. Block and timing diagrams follow.

Figure 30-1. Left Aligned Block Diagram

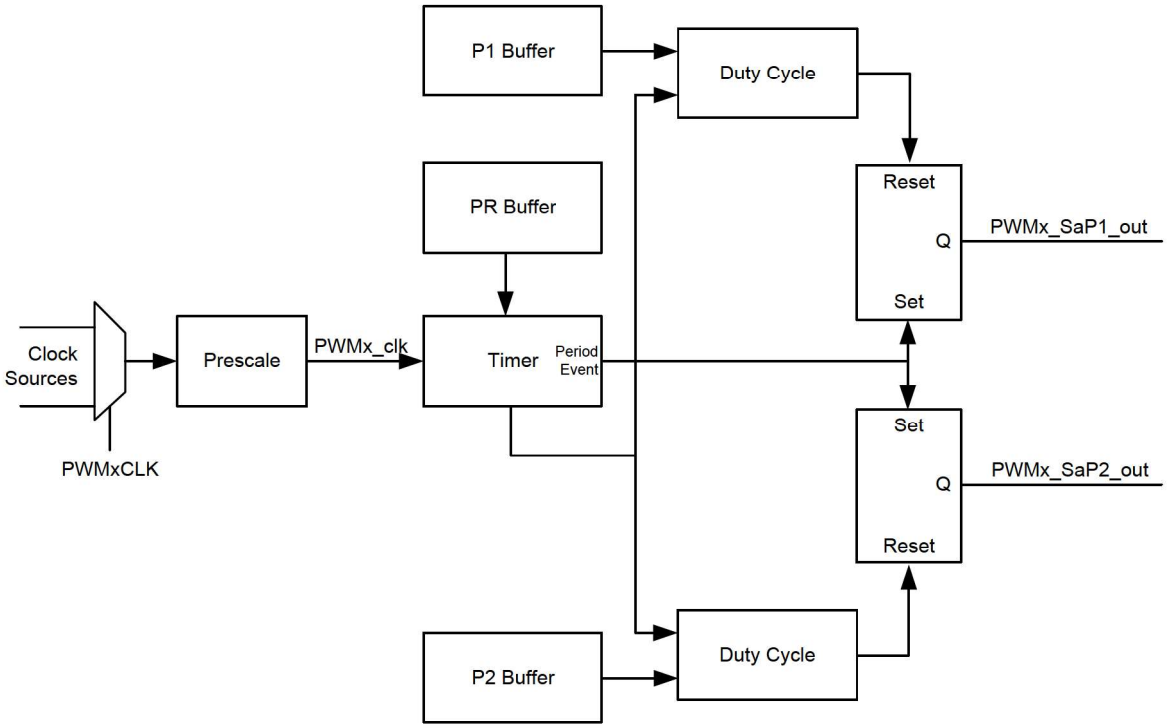

Figure 30-2. Left Aligned Timing Diagram

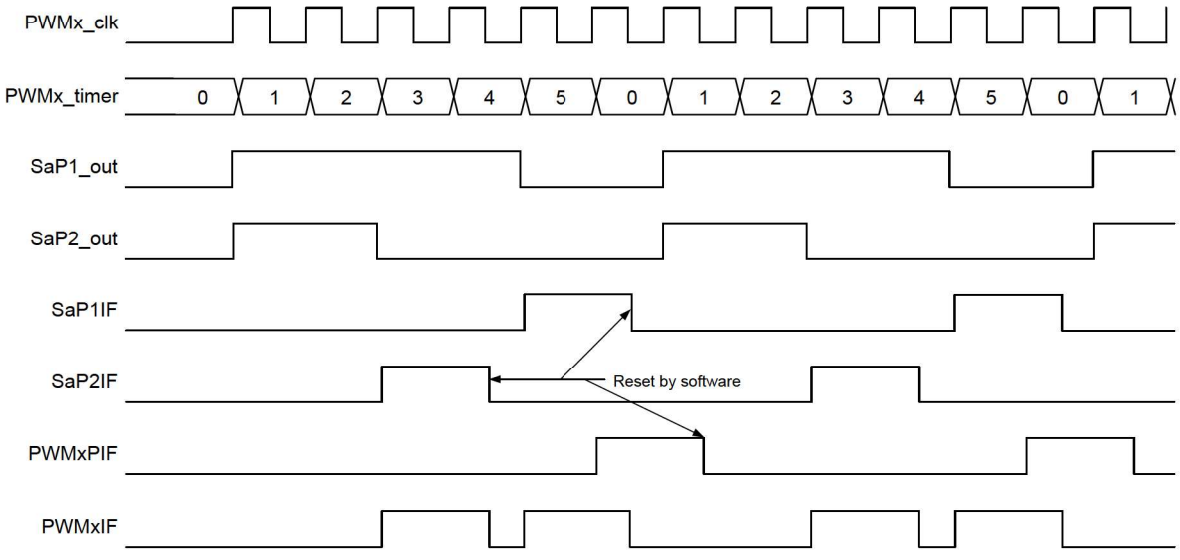

Note: MODE='b000, PR=5, P1=4, P2=2

30.1.2.2 Right Aligned Mode

In Right Aligned mode the active part of the duty cycle is at the end of the period. The outputs start in the Inactive state and then go active the number of prescaled PWM clock periods specified by the P1 and P2 parameter registers before the end of the period. Block and timing diagrams follow.

Figure 30-3. Right Aligned Block Diagram

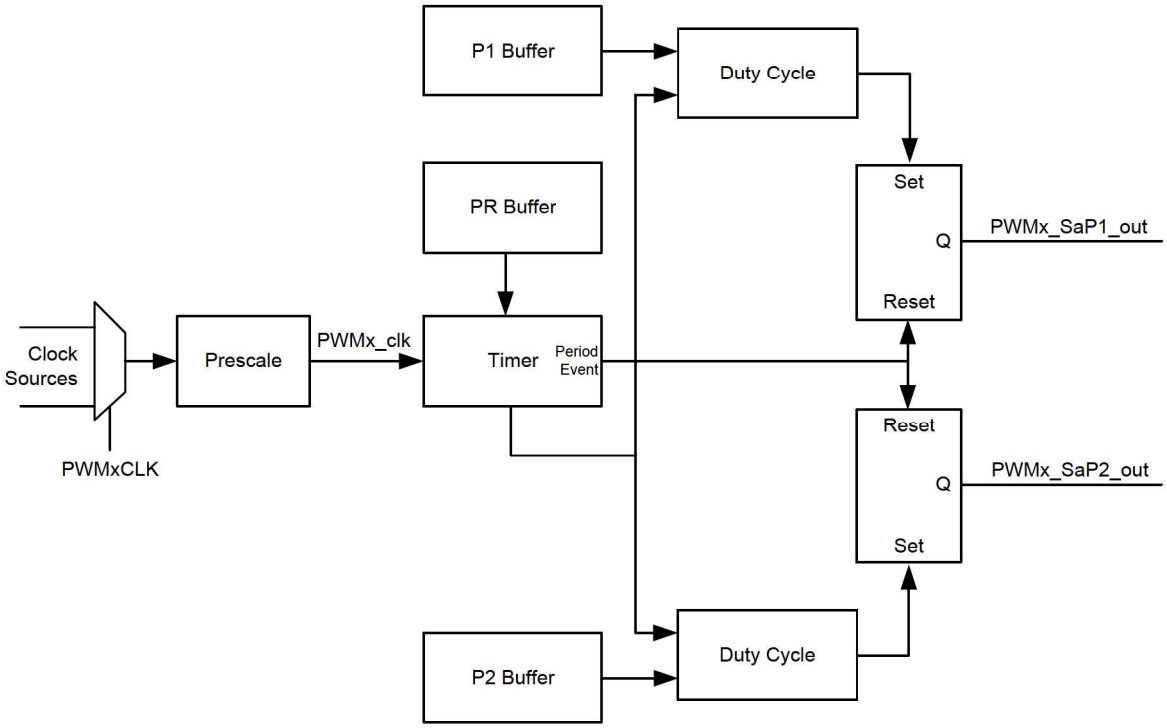

Figure 30-4. Right Aligned Timing Diagram

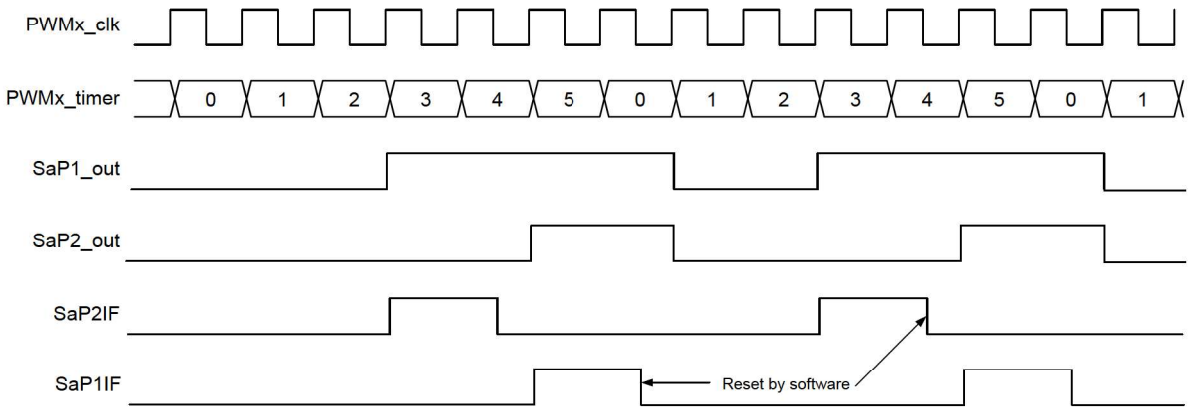

Note: MODE='b001, PR=5, P1=4, P2=2

30.1.2.3 Center Aligned Mode

In Center Aligned mode the active duty cycle is centered in the period. The period for this mode is twice that of other modes as shown in the following equation.

Equation 30-1. Center Aligned Period

$$Period = \frac{(PR + 1) \times 2}{F_{PWMx_clk}}$$

The parameter register specifies the number of PWM clock periods that the output goes active before the period center. The output goes inactive the same number of prescaled PWM clock periods after the period center. Block and timing diagrams follow.

Figure 30-5. Center Aligned Block Diagram

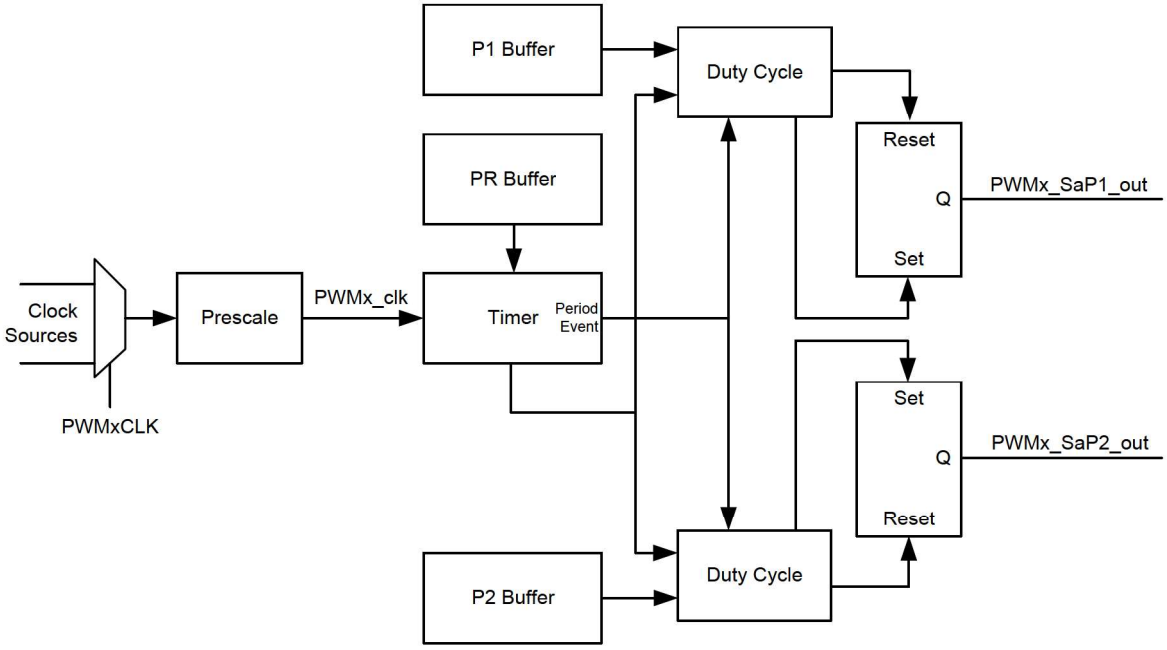

Figure 30-6. Center Aligned Timing Diagram

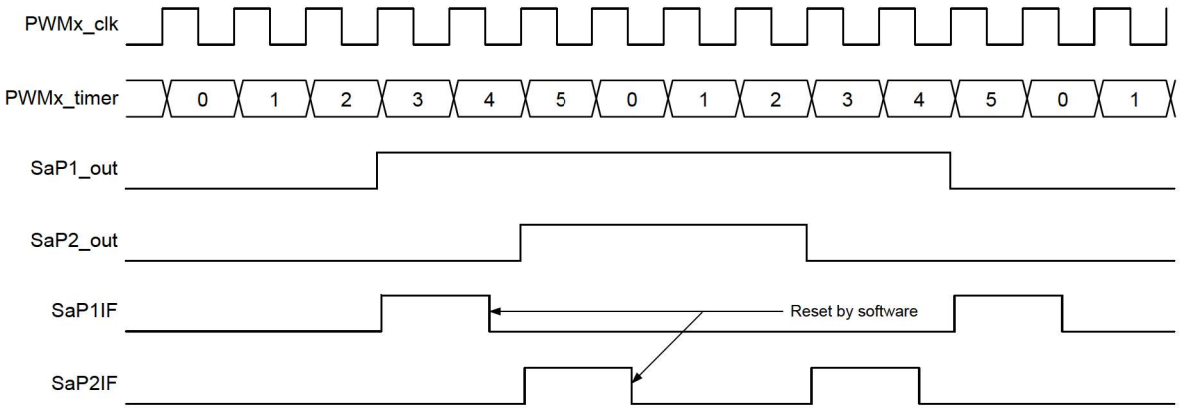

Note: MODE='b010 PR=5, P1=4, P2=2

30.1.2.4 Variable Alignment Mode

In Variable Alignment mode the active part of the duty cycle starts when the parameter 1 value (P1) matches the timer and ends when the parameter 2 value (P2) matches the timer. Both outputs are identical because both parameter values are used for the same duty cycle. Block and timing diagrams follow.

Figure 30-7. Variable Alignment Block Diagram

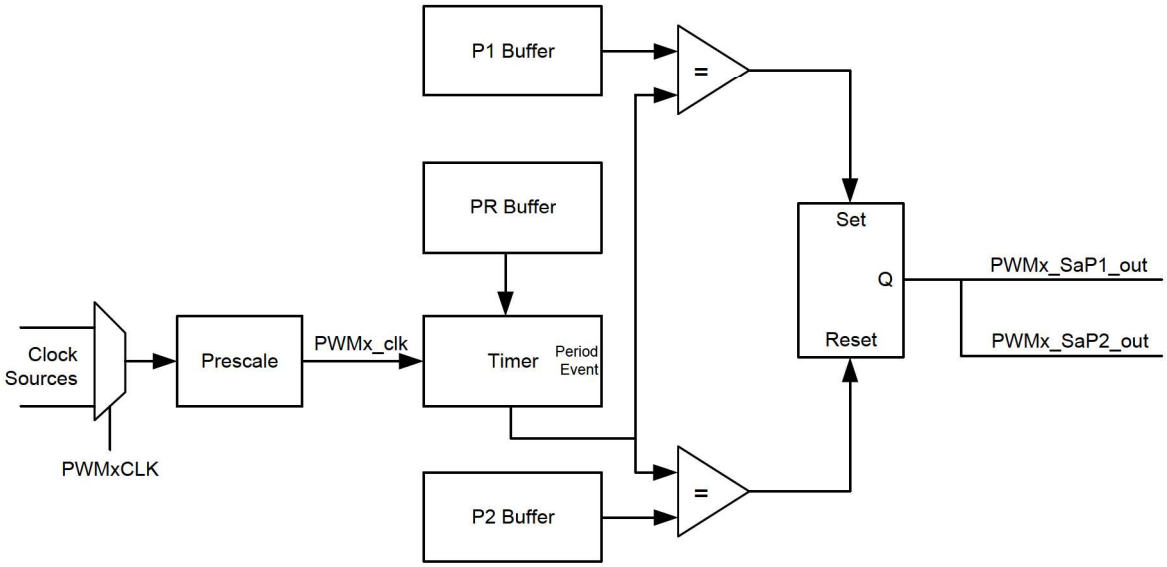

Figure 30-8. Variable Alignment Timing Diagram

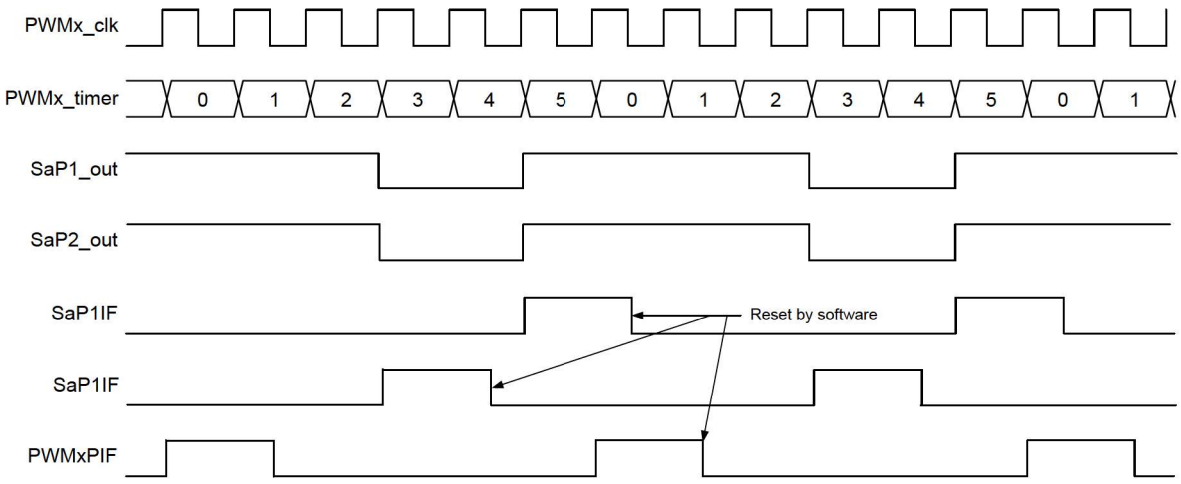

Note: MODE='b011 PR=5, P1=4, P2=2

30.1.2.5 Compare Modes

In the Compare modes, the PWM timer is compared to the P1 and P2 parameter values. When a match occurs the output is either pulsed or toggled. In Pulsed Compare mode, the duty cycle is always one prescaled PWM clock period. In Toggle Compare mode the duty cycle is always one full PWM period. Refer to the following sections for more details.

30.1.2.5.1 Pulsed Compare Mode

In Pulsed Compare mode the duty cycle is one prescaled PWM clock period that starts when the timer matches the parameter value and ends one prescaled PWM clock period later. The outputs start in the Inactive state and then go active during the duty cycle. Block and timing diagrams follow.

Figure 30-9. Pulsed Compare Block Diagram

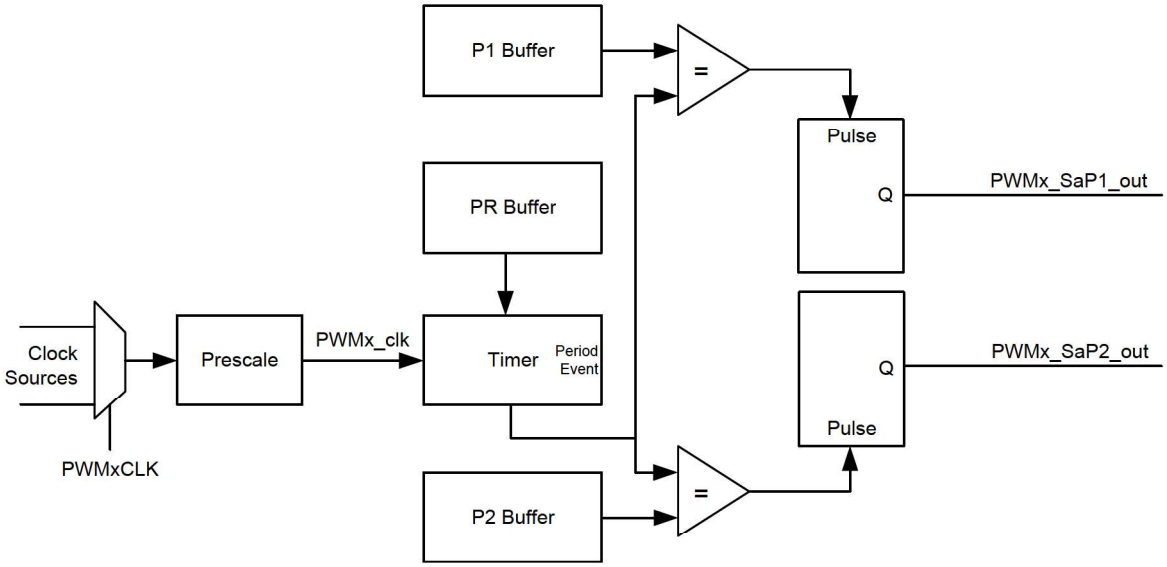

Figure 30-10. Pulsed Compare Timing Diagram

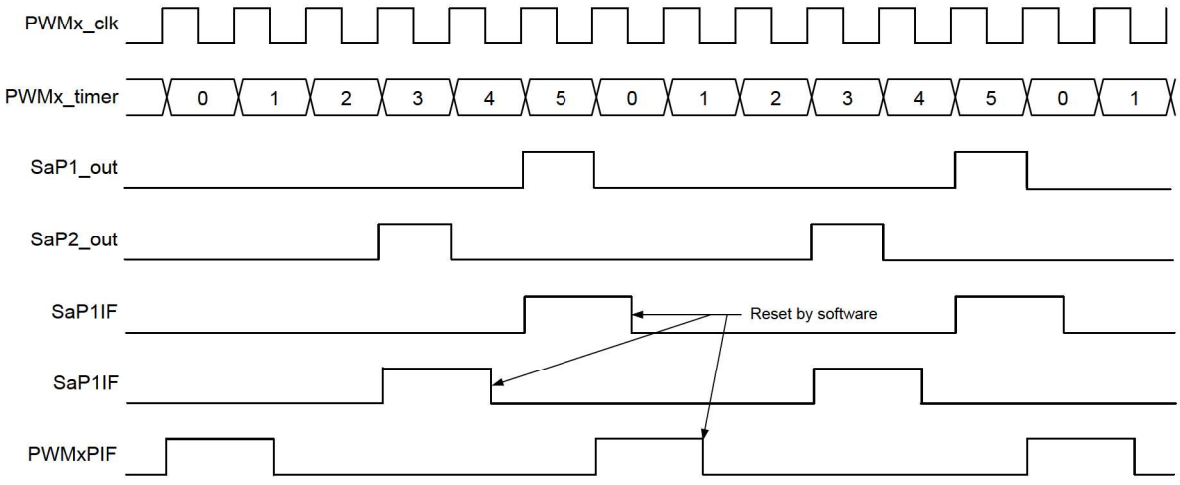

Note: MODE='b100 PR=5, P1=4, P2=2

30.1.2.5.2 Toggled Compare

In Toggled Compare mode the duty cycle is alternating full PWM periods. The output goes active when the PWM timer matches the P1 or P2 parameter value and goes inactive in the next period at the same match point. Block and timing diagrams follow.

Figure 30-11. Toggled Compare Block Diagram

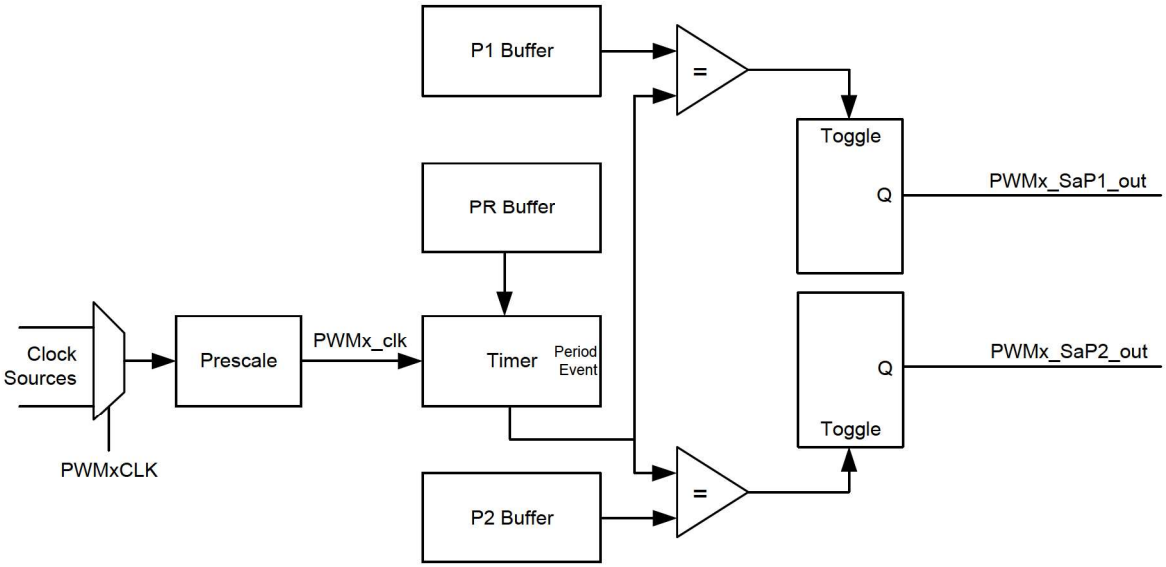

Figure 30-12. Toggled Compare Timing Diagram

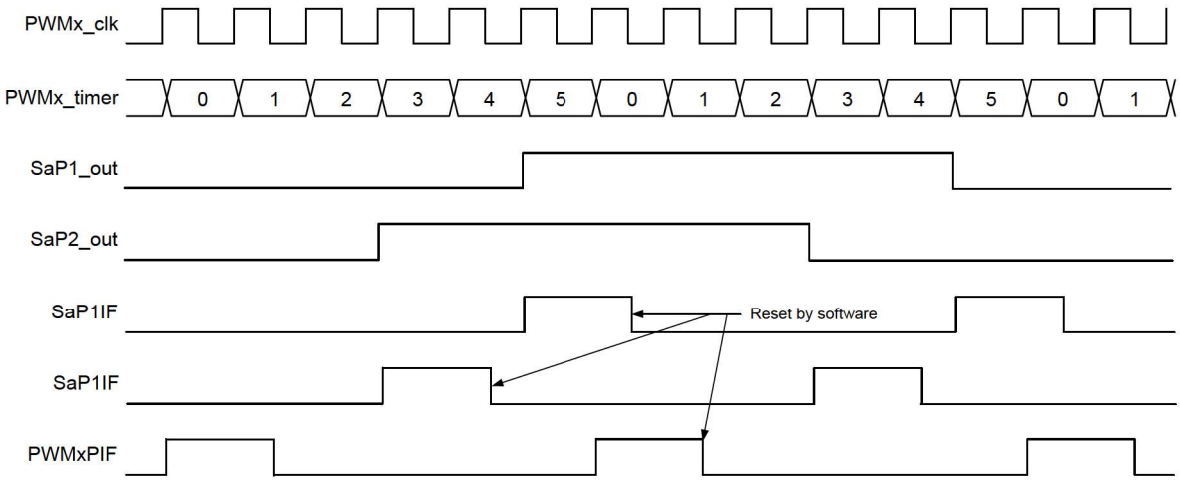

Note: MODE='b101 PR=5, P1=4, P2=2

30.1.3 Push-Pull Mode

The Push-Pull mode is enabled by setting the PPEN bit. Push-Pull operates only in the Left Aligned and Right Aligned modes. In the Push-Pull mode the outputs are active every other PWM period. PWMx_SaP1_out is active when the PWMx_SaP2_out is not and the PWMx_SaP2_out is active when the PWMx_SaP1_out is not. When the parameter value (P1 or P2) is greater than the period value (PR) then the corresponding output is active for one full PWM period. The following figures illustrate timing examples of Left and Right Aligned Push-Pull modes.

Figure 30-13. Left Aligned Push-Pull Mode Timing Diagram

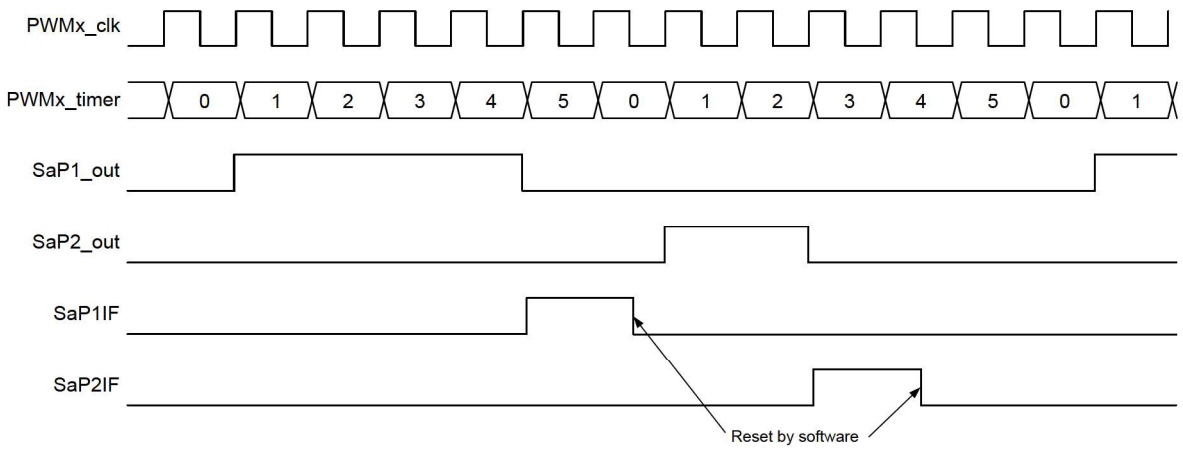

Note: MODE='b000, PR=5, P1=4, P2=2, PPEN=1

Figure 30-14. Right Aligned Push-Pull Mode Timing Diagram

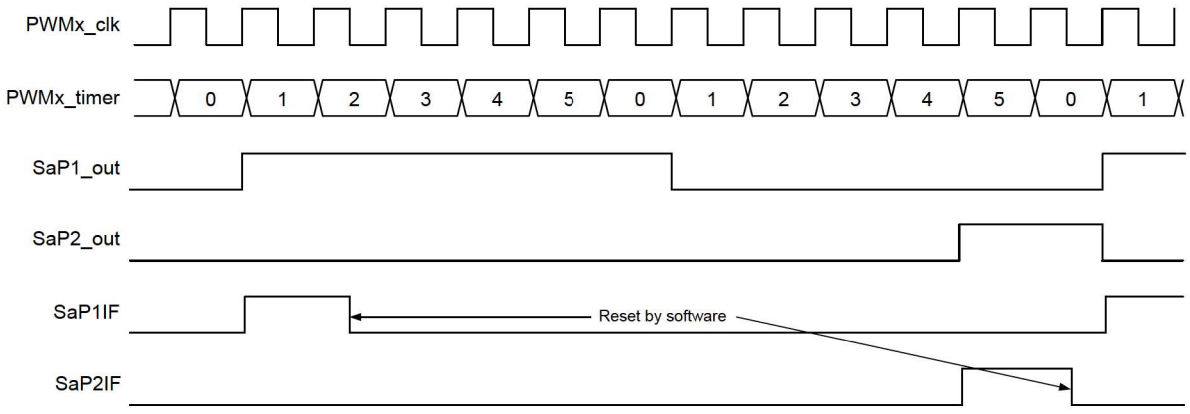

Note: MODE='b001, PR=5, P1=6, P2=2, PPEN=1

30.2 Period Timer

All slices in a PWM instance operate with the same period. The value written to the PWMxPR register is one less than the number of prescaled PWM clock periods (PWM_clk) in the PWM period.

The PWMxPR register is double buffered. When the PWM is operating, writes to the PWMxPR register are transferred to the period buffer only after the LD bit is set or an external load event occurs. The transfer occurs at the next period Reset event. If the LD bit is set less than 3 PWM clock periods before the end of the period then the transfer may be one full period later.

Loading the buffers of multiple PWM instances can be coordinated using the PWMLOAD register. See the Buffered Period and Parameter Registers section for more details.

30.3 Clock Sources

The time base for the PWM period prescaler is selected with the CLK bits. Changes take effect immediately when written. Clearing the EN bit before making clock source changes is recommended to avoid unexpected behavior.

30.3.1 Clock Prescaler

The PWM clock frequency can be reduced with the clock prescaler. There are 256 prescale selections from 1:1 to 1:256.

The CPRE bits select the prescale value. Changes to the prescale value take effect immediately. Clearing the EN bit before making prescaler changes is recommended to avoid unexpected behavior. The prescale counter is reset when the EN bit is cleared.

30.4 External Period Resets

The period timer can be reset and held at zero by a logic level from one of various sources. The Reset event also resets the postscaler counter. The resetting source is selected with the ERS bits.

The Reset can be configured with the ERSNOW bit to occur on either the next PWM clock or the next PWM period Reset event. When the ERSNOW bit is set then the Reset will occur on the next PWM clock. When the ERSNOW bit is cleared then the Reset will be held off until the period normally resets at the end of the period. The difference between a normal period Reset and an ERS Reset is that once the timer is reset it is held at zero until the ERS signal goes false. The following timing diagrams illustrate the two types of external Reset.

Figure 30-15. Right Aligned Mode with ERSNOW = 1

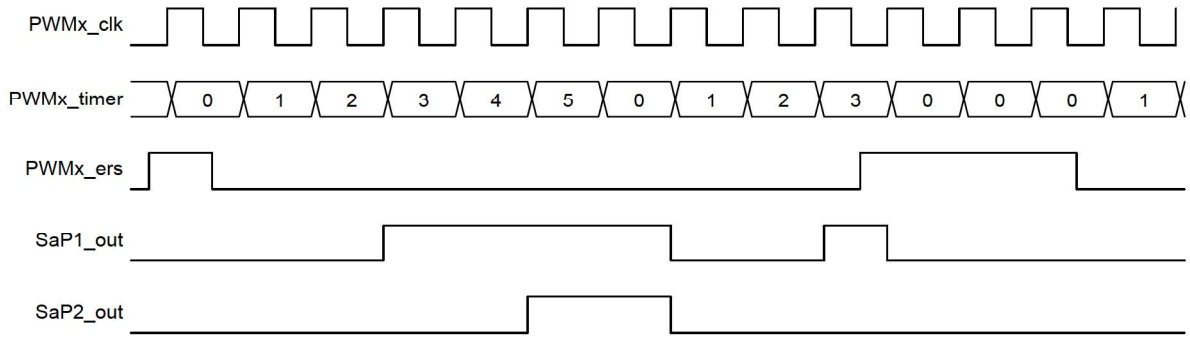

Note: PR=5, P1=4, P2=2

Figure 30-16. Left Aligned Mode with ERSNOW = 0

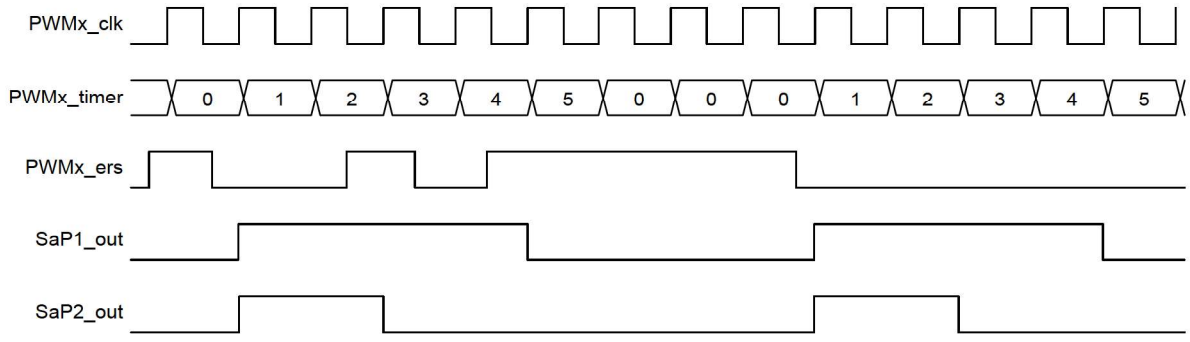

Note: PR=5, P1=4, P2=2

30.5 Buffered Period and Parameter Registers

The PWMxPR, PWMxSaP1 and PWMxSaP2 registers are double buffered. The PWM module operates on the buffered copies. The values in all these registers are copied to the buffer registers when the PWM module is enabled.

Changes to the PWMxPR, PWMxSaP1 and PWMxSaP2 registers do not affect the buffer registers while the PWM is operating until either software sets the LD bit or an external load event occurs. For all operating modes except Center Aligned, the values are copied to the buffer registers when the PWM timer is reloaded at the end of the period in which the load request occurred. In the Center Aligned mode the buffer update occurs on every other period Reset event because one full center aligned period uses two period cycles. Load requests that occur three or less clocks before the end of the period may not be serviced until the following period.

A list of external load trigger sources is shown in the PWMxLDS register. Software can set the LD bits of multiple PWM instances simultaneously with the PWMLOAD register.

Important: No changes are allowed after the LD bit is set until after the LD bit is cleared by hardware. Unexpected behavior may result if the LD bit is cleared by software.

30.6 Synchronizing Multiple PWMs

To synchronize multiple PWMs the PWMEN register is used to enable selected PWMs simultaneously. The bits in the PWMEN register are mirror copies of the EN bit of every PWM in the device. Setting or clearing the EN bits in the PWMEN register enables or disables all the corresponding PWMs simultaneously.

30.7 Interrupts

Each PWM instance has a period interrupt and interrupts associated with the mode and parameter settings.

30.7.1 Period Interrupt

The period interrupt occurs when the PWMx timer value matches the PR value, thereby also resetting the PWMx timer. Refer to Figure 30-2 for a timing example. The period interrupt is indicated with the PWMxPIF flag bit in one of the PIR registers and is set whether or not the interrupt is enabled. This flag must be reset by software. The PWMxPIF interrupt is enabled with the PWMxPIE bit in the corresponding PIE register.

30.7.1.1 Period Interrupt Postscaler

The frequency of the period interrupt events can be reduced with the period interrupt postscaler. A postscaler counter suppresses period interrupts until the postscale count is reached. Only one PWM period interrupt is generated for every postscale counts. There are 256 postscale selections from 1:1 to 1:256.

The PIPOS bits select the postscale value. Changes to the postscale value take effect immediately. Clearing the EN bit before making postscaler changes is recommended to avoid unexpected behavior. The postscale counter is reset when the EN bit is cleared.

30.7.2 Parameter Interrupts

The P1 and P2 parameters in each slice have interrupts that occur depending on the selected mode. The individual parameter interrupts are indicated in the PWMxGIR register and enabled by the corresponding bits in the PWMxGIE register.

A timing example is shown in Figure 30-2. Refer to the timing diagrams of each of the other modes for more details.

All the enabled PWMxGIR interrupts of one PMW instance are OR'd together into the PWMxIF bit in one of the PIR registers. The PWMxIF bit is read-only. When any of the PWMxGIR bits are set then the PWMxIF bit is true. All PWMxGIF flags must be reset to clear the PWMxIF bit. The PWMxIF interrupt is enabled with the PWMxIE bit in the corresponding PIE register.

30.8 Operation During Sleep

The PWM module operates in Sleep only if the PWM clock is active. Some internal clock sources are automatically enabled to operate in Sleep when a peripheral using them is enabled. Those clock sources are identified in the clock source table shown in the PWMxCLK clock source selection register.

30.9 Register Definitions: PWM Control

Long bit name prefixes for the PWM peripherals are shown in the table below. Refer to the **"Long Bit Names"** section in the **"Register and Bit Naming Conventions"** chapter for more information.

Table 30-1. PWM Bit Name Prefixes

Peripheral	Bit Name Prefix
PWM1	PWM1
PWM2	PWM2
PWM3	PWM3

30.9.1 PWMxERS

Name: PWMxERS
Address: 0x460,0x46F,0x47E

PWMx External Reset Source

Bit	7	6	5	4	3	2	1	0
					ERS[3:0]			
Access					R/W	R/W	R/W	R/W
Reset					0	0	0	0

Bits 3:0 – ERS[3:0] External Reset Source Select

ERS	Reset Source		
	PWM1	PWM2	PWM3
1111 - 1100	Reserved (ERS Disabled)		
1011	CLC4_OUT		
1010	CLC3_OUT		
1001	CLC2_OUT		
1000	CLC1_OUT		
0111	PWM3S1P2_OUT	PWM3S1P2_OUT	Reserved
0110	PWM3S1P1_OUT	PWM3S1P1_OUT	Reserved
0101	PWM2S1P2_OUT	Reserved	PWM2S1P2_OUT
0100	PWM2S1P1_OUT	Reserved	PWM2S1P1_OUT
0011	Reserved	PWM1S1P2_OUT	PWM1S1P2_OUT
0010	Reserved	PWM1S1P1_OUT	PWM1S1P1_OUT
0001	PWM1ERSPPS	PWM2ERSPPS	PWM3ERSPPS
0000	ERS Disabled		

30.9.2 PWMxCLK

Name: PWMxCLK
Address: 0x461,0x470,0x47F

PWMx Clock Source

Bit	7	6	5	4	3	2	1	0
					CLK[3:0]			
Access					R/W	R/W	R/W	R/W
Reset					0	0	0	0

Bits 3:0 – CLK[3:0] PWM Clock Source Select

CLK	Source	Operates in sleep
1111	Reserved	N/A
1110	CLC4_OUT	Yes(1)
1101	CLC3_OUT	Yes(1)
1100	CLC2_OUT	Yes(1)
1011	CLC1_OUT	Yes(1)
1010	NCO1_OUT	Yes(1)
1001	CLKREF	Yes(1)
1000	EXTOSC	Yes
0111	SOSC	Yes
0110	MFINTOSC (32 kHz)	Yes
0101	MFINTOSC (500 kHz)	Yes
0100	LFINTOSC	Yes
0011	HFINTOSC	Yes
0010	F_{OSC}	No
0001	PWMIN1PPS	Yes(1)
0000	PWMIN0PPS	Yes(1)

Note: Operation during Sleep is possible if the clock supplying the source peripheral operates in Sleep.

30.9.3 PWMxLDS

Name: PWMxLDS
Address: 0x462,0x471,0x480

PWMx Auto-load Trigger Source Select Register

Bit	7	6	5	4	3	2	1	0
					LDS[3:0]			
Access					R/W	R/W	R/W	R/W
Reset					0	0	0	0

Bits 3:0 – LDS[3:0] Auto-load Trigger Source Select

LDS	Source
1111 - 1011	Auto-load Disabled
1010	DMA4_Destination_Count_Done
1001	DMA3_Destination_Count_Done
1000	DMA2_Destination_Count_Done
0111	DMA1_Destination_Count_Done
0110	CLC4_OUT
0101	CLC3_OUT
0100	CLC2_OUT
0011	CLC1_OUT
0010	PWMIN1PPS
0001	PWMIN0PPS
0000	Auto-load Disabled

30.9.4 PWMxPR

Name: PWMxPR
Address: 0x463,0x472,0x481

PWMx Period Register

Determines the PWMx period

Bit	15	14	13	12	11	10	9	8
	PR[15:8]							
Access	R/W	R/W	R/W	R/W	R/W	R/W	R/W	R/W
Reset	0	0	0	0	0	0	0	0

Bit	7	6	5	4	3	2	1	0
	PR[7:0]							
Access	R/W	R/W	R/W	R/W	R/W	R/W	R/W	R/W
Reset	0	0	0	0	0	0	0	0

Bits 15:0 – PR[15:0] PWM Period
Number of PWM clocks periods in the PWM period

Notes: The individual bytes in this multi-byte register can be accessed with the following register names:

- PWMxPRH: Accesses the high byte PR[15:8]
- PWMxPRL: Accesses the low byte PR[7:0]

30.9.5 PWMxCPRE

Name: PWMxCPRE
Address: 0x465,0x474,0x483

PWMx Clock Prescaler Register

Bit	7	6	5	4	3	2	1	0
	CPRE[7:0]							
Access	R/W	R/W	R/W	R/W	R/W	R/W	R/W	R/W
Reset	0	0	0	0	0	0	0	0

Bits 7:0 – CPRE[7:0] PWM Clock Prescale Value

Value	Description
n	PWM clock is prescaled by n+1

30.9.6 PWMxPIPOS

Name: PWMxPIPOS
Address: 0x466,0x475,0x484

PWMx Period Interrupt Postscaler Register

Bit	7	6	5	4	3	2	1	0
	PIPOS[7:0]							
Access	R/W	R/W	R/W	R/W	R/W	R/W	R/W	R/W
Reset	0	0	0	0	0	0	0	0

Bits 7:0 – PIPOS[7:0] Period Interrupt Postscale Value

Value	Description
n	Period interrupt occurs after n+1 period events

30.9.7 PWMxGIR

Name: PWMxGIR
Address: 0x467,0x476,0x485

PWMx Interrupt Register

Bit	7	6	5	4	3	2	1	0
							S1P2	S1P1
Access							R/W/HS	R/W/HS
Reset							0	0

Bit 1 – SaP2 Slice "a" Parameter 2 Interrupt Flag

Value	MODE	Description
1	Variable aligned or Compare	Compare match between P2 and PWM counter has occurred
1	Center aligned	PWMx_SaP2_out has changed
1	Right aligned	Left edge of PWMx_SaP2_out pulse has occurred
1	Left aligned	Right edge of PWMx_SaP2_out pulse has occurred
0	All	Interrupt event has not occurred

Bit 0 – SaP1 Slice "a" Parameter 1 Interrupt Flag

Value	MODE	Description
1	Variable aligned or Compare	Compare match between P1 and PWM counter has occurred
1	Center aligned	PWMx_SaP1_out has changed
1	Right aligned	Left edge of PWMx_SaP1_out pulse has occurred
1	Left aligned	Right edge of PWMx_SaP1_out pulse has occurred
0	All	Interrupt event has not occurred

30.9.8 PWMxGIE

Name: PWMxGIE
Address: 0x468,0x477,0x486

PWMx Interrupt Enable Register

Bit	7	6	5	4	3	2	1	0
							S1P2	S1P1
Access							R/W	R/W
Reset							0	0

Bit 1 – SaP2 Slice “a” Parameter 2 Interrupt Enable

Value	Description
1	Slice “a” Parameter 2 match interrupt is enabled
0	Slice “a” Parameter 2 match interrupt is not enabled

Bit 0 – SaP1 Slice “a” Parameter 1 Interrupt Enable

Value	Description
1	Slice “a” Parameter 1 match interrupt is enabled
0	Slice “a” Parameter 1 match interrupt is not enabled

30.9.9 PWMxCON

Name: PWMxCON
Address: 0x469,0x478,0x487

PWM Control Register

Bit	7	6	5	4	3	2	1	0
	EN					LD	ERSPOL	ERSNOW
Access	R/W					R/W/HC	R/W	R/W
Reset	0					0	0	0

Bit 7 – EN PWM Module Enable

Value	Description
1	PWM module is enabled
0	PWM module is disabled. The prescaler, postscaler, and all internal logic is reset. Outputs go to their default states. Register values remain unchanged.

Bit 2 – LD Reload Registers

Reload the period and duty cycle registers on the next period event

Value	Description
1	Reload PR/P1/P2 registers
0	Reload not enabled or reload complete

Bit 1 – ERSPOL External Reset Polarity Select

Value	Description
1	External Reset input is active-low
0	External Reset input is active-high

Bit 0 – ERSNOW External Reset Mode Select

Determines when an external Reset event takes effect.

Value	Description
1	Stop counter on the next PWM clock. Output goes to the Inactive state.
0	Stop counter at the end of the period. Output goes to the Inactive state.

30.9.10 PWMxSaCFG

Name: PWMxSaCFG

PWM Slice "a" Configuration Register(1)

Bit	7	6	5	4	3	2	1	0
	POL2	POL1			PPEN	MODE[2:0]		
Acccss	R/W	R/W			R/W	R/W	R/W	R/W
Reset	0	0			0	0	0	0

Bit 7 – POL2 PWM Slice "a" Parameter 2 Output Polarity

Value	Description
1	PWMx_SaP2_out is low true
0	PWMx_SaP2_out is high true

Bit 6 – POL1 PWM Slice "a" Parameter 1 Output Polarity

Value	Description
1	PWMx_SaP1_out is low true
0	PWMx_SaP1_out is high true

Bit 3 – PPEN Push-Pull Mode Enable

Each period the output alternates between PWMx_SaP1_out and PWMx_SaP2_out. Only Left and Right Aligned modes are supported. Other modes may exhibit unexpected results.

Value	Description
1	PWMx Slice "a" Push-Pull mode is enabled
0	PWMx Slice "a" Push-Pull mode is not enabled

Bits 2:0 – MODE[2:0] PWM Module Slice "a" Operating Mode Select

Selects operating mode for both PWMx_SaP1_out and PWMx_SaP2_out

Value	Description
11x	Reserved. Outputs go to Reset state.
101	Compare mode: Toggle PWMx_SaP1_out and PWMx_SaP2_out on PWM timer match with corresponding parameter register
100	Compare mode: Set PWMx_SaP1_out and PWMx_SaP2_out high on PWM timer match with corresponding parameter register
011	Variable Aligned mode
010	Center Aligned mode
001	Right Aligned mode
000	Left Aligned mode

Note:

1. Changes to this register must be done only when the EN bit is cleared.

30.9.11 PWMxSaP1

Name: PWMxSaP1

PWM Slice “a” Parameter 1 Register

Determines the active period of slice “a”, parameter 1 output

Bit	15	14	13	12	11	10	9	8
	P1[15:8]							
Access	R/W	R/W	R/W	R/W	R/W	R/W	R/W	R/W
Reset	0	0	0	0	0	0	0	0

Bit	7	6	5	4	3	2	1	0
	P1[7:0]							
Access	R/W	R/W	R/W	R/W	R/W	R/W	R/W	R/W
Reset	0	0	0	0	0	0	0	0

Bits 15:0 – P1[15:0] Parameter 1 Value

Value	MODE	Description
n	Compare	Compare match event occurs when PWMx timer = n (Refer to MODE selections)
n	Variable aligned	PWMx_SaP1_out and PWMx_SaP2 both go high when PWMx timer = n
n	Center aligned	PWMx_SaP1_out is high 2*n PWMx clock periods centered around PWMx period event
n	Right aligned	PWMx_SaP1_out is high n PWMx clock periods at end of PWMx period
n	Left aligned	PWMx_SaP1_out is high n PWMx clock periods at beginning of PWMx period

Notes: The individual bytes in this multi-byte register can be accessed with the following register names:

- PWMxSaP1H: Accesses the high byte P1[15:8]
- PWMxSaP1L: Accesses the low byte P1[7:0]

30.9.12 PWMxSaP2

Name: PWMxSaP2

PWM Slice “a” Parameter 2 Register

Determines the active period of slice “a”, parameter 2 output

Bit	15	14	13	12	11	10	9	8
	P2[15:8]							
Access	R/W	R/W	R/W	R/W	R/W	R/W	R/W	R/W
Reset	0	0	0	0	0	0	0	0

Bit	7	6	5	4	3	2	1	0
	P2[7:0]							
Access	R/W	R/W	R/W	R/W	R/W	R/W	R/W	R/W
Reset	0	0	0	0	0	0	0	0

Bits 15:0 – P2[15:0] Parameter 2 Value

Value	MODE	Description
n	Compare	Compare match event occurs when PWMx timer = n (Refer to MODE selections)
n	Variable aligned	PWMx_SaP1_out and PWMx_SaP2 both go low when PWMx timer = n
n	Center aligned	PWMx_SaP2_out is high 2*n PWMx clock periods centered around PWMx period event
n	Right aligned	PWMx_SaP2_out is high n PWMx clock periods at end of PWMx period
n	Left aligned	PWMx_SaP2_out is high n PWMx clock periods at beginning of PWMx period

Notes: The individual bytes in this multi-byte register can be accessed with the following register names:

- PWMxSaP2H: Accesses the high byte P2[15:8]
- PWMxSaP2L: Accesses the low byte P2[7:0]

30.9.13 PWMLOAD

Name: PWMLOAD
Address: 0x49C

Mirror copies of all PWMxLD bits

Bit	7	6	5	4	3	2	1	0
						MPWM3LD	MPWM2LD	MPWM1LD
Access						R/W	R/W	R/W
Reset						0	0	0

Bits 0, 1, 2 – MPWMxLD Mirror copy of PWMxLD bit
Mirror copies of all PWMxLD bits can be set simultaneously to synchronize the load event across all PWMs

Value	Description
1	PWMx parameter and period values will be transferred to their buffer registers at the next period Reset event
0	There are no PWMx period and parameter value transfers pending

30.9.14 PWMEN

Name: PWMEN
Address: 0x49D

Mirror copies of all PWMxEN bits

Bit	7	6	5	4	3	2	1	0
						MPWM3EN	MPWM2EN	MPWM1EN
Access						R/W	R/W	R/W
Reset						0	0	0

Bits 0, 1, 2 – MPWMxEN Mirror copy of PWMxEN bit
Mirror copies of all PWMxEN bits can be set simultaneously to synchronize the enable event across all PWMs

Value	Description
1	PWMx is enabled
0	PWMx is not enabled

30.10 Register Summary - PWM

Address	Name	Bit Pos.	7	6	5	4	3	2	1	0
0x00 ... 0x045F	Reserved									
0x0460	PWM1ERS	7:0					ERS[3:0]			
0x0461	PWM1CLK	7:0					CLK[3:0]			
0x0462	PWM1LDS	7:0					LDS[3:0]			
0x0463	PWM1PR	7:0	PR[7:0]							
		15:8	PR[15:8]							
0x0465	PWM1CPRE	7:0	CPRE[7:0]							
0x0466	PWM1PIPOS	7:0	PIPOS[7:0]							
0x0467	PWM1GIR	7:0							S1P2	S1P1
0x0468	PWM1GIE	7:0							S1P2	S1P1
0x0469	PWM1CON	7:0	EN					LD	ERSPOL	ERSNOW
0x046A	PWM1S1CFG	7:0	POL2	POL1			PPEN	MODE[2:0]		
0x046B	PWM1S1P1	7:0	P1[7:0]							
		15:8	P1[15:8]							
0x046D	PWM1S1P2	7:0	P2[7:0]							
		15:8	P2[15:8]							
0x046F	PWM2ERS	7:0					ERS[3:0]			
0x0470	PWM2CLK	7:0					CLK[3:0]			
0x0471	PWM2LDS	7:0					LDS[3:0]			
0x0472	PWM2PR	7:0	PR[7:0]							
		15:8	PR[15:8]							
0x0474	PWM2CPRE	7:0	CPRE[7:0]							
0x0475	PWM2PIPOS	7:0	PIPOS[7:0]							
0x0476	PWM2GIR	7:0							S1P2	S1P1
0x0477	PWM2GIE	7:0							S1P2	S1P1
0x0478	PWM2CON	7:0	EN					LD	ERSPOL	ERSNOW
0x0479	PWM2S1CFG	7:0	POL2	POL1			PPEN	MODE[2:0]		
0x047A	PWM2S1P1	7:0	P1[7:0]							
		15:8	P1[15:8]							
0x047C	PWM2S1P2	7:0	P2[7:0]							
		15:8	P2[15:8]							
0x047E	PWM3ERS	7:0					ERS[3:0]			
0x047F	PWM3CLK	7:0					CLK[3:0]			
0x0480	PWM3LDS	7:0					LDS[3:0]			
0x0481	PWM3PR	7:0	PR[7:0]							
		15:8	PR[15:8]							
0x0483	PWM3CPRE	7:0	CPRE[7:0]							
0x0484	PWM3PIPOS	7:0	PIPOS[7:0]							
0x0485	PWM3GIR	7:0							S1P2	S1P1
0x0486	PWM3GIE	7:0							S1P2	S1P1
0x0487	PWM3CON	7:0	EN					LD	ERSPOL	ERSNOW
0x0488	PWM3S1CFG	7:0	POL2	POL1			PPEN	MODE[2:0]		
0x0489	PWM3S1P1	7:0	P1[7:0]							
		15:8	P1[15:8]							
0x048B	PWM3S1P2	7:0	P2[7:0]							
		15:8	P2[15:8]							
0x048D ... 0x049B	Reserved									
0x049C	PWMLOAD	7:0						MPWM3LD	MPWM2LD	MPWM1LD
0x049D	PWMEN	7:0						MPWM3EN	MPWM2EN	MPWM1EN

31. CWG - Complementary Waveform Generator Module

The Complementary Waveform Generator (CWG) produces half-bridge, full-bridge, and steering of PWM waveforms. It is backwards compatible with previous CCP functions.

The CWG has the following features:

- Six Operating modes:
  - Synchronous Steering mode
  - Asynchronous Steering mode
  - Full-Bridge mode, Forward
  - Full-Bridge mode, Reverse
  - Half-Bridge mode
  - Push-Pull mode
- Output Polarity Control
- Output Steering
- Independent 6-bit Rising and Falling Event Dead-Band Timers:
  - Clocked dead band
  - Independent rising and falling dead-band enables
- Auto-Shutdown Control With:
  - Selectable shutdown sources
  - Auto-restart option
  - Auto-shutdown pin override control

31.1 Fundamental Operation

The CWG generates two output waveforms from the selected input source.

The off-to-on transition of each output can be delayed from the on-to-off transition of the other output, thereby creating a time delay immediately where neither output is driven. This is referred to as dead time and is covered in Dead-Band Control section.

It may be necessary to guard against the possibility of circuit faults or a feedback event arriving too late or not at all. In this case, the active drive must be terminated before the Fault condition causes damage. This is referred to as auto-shutdown and is covered in the Auto-Shutdown section.

31.2 Operating Modes

The CWG module can operate in six different modes, as specified by the MODE bits:

- Half-Bridge mode
- Push-Pull mode
- Asynchronous Steering mode
- Synchronous Steering mode
- Full-Bridge mode, Forward
- Full-Bridge mode, Reverse

All modes accept a single pulse input, and provide up to four outputs as described in the following sections.

All modes include auto-shutdown control as described in Auto-Shutdown section.

Important: Except as noted for Full-Bridge mode, mode changes should only be performed while EN = 0.

31.2.1 Half-Bridge Mode

In Half-Bridge mode, two output signals are generated as true and inverted versions of the input as illustrated in Figure 31-1. A non-overlap (dead-band) time is inserted between the two outputs to prevent shoot-through current in various power supply applications. Dead-band control is described in Dead-Band Control section. The output steering feature cannot be used in this mode. A basic block diagram of this mode is shown in Figure 31-2.

The unused outputs CWGxC and CWGxD drive similar signals as CWGxA and CWGxB, with polarity independently controlled by the POLC and POLD bits, respectively.

Figure 31-1. CWG Half-Bridge Mode Operation

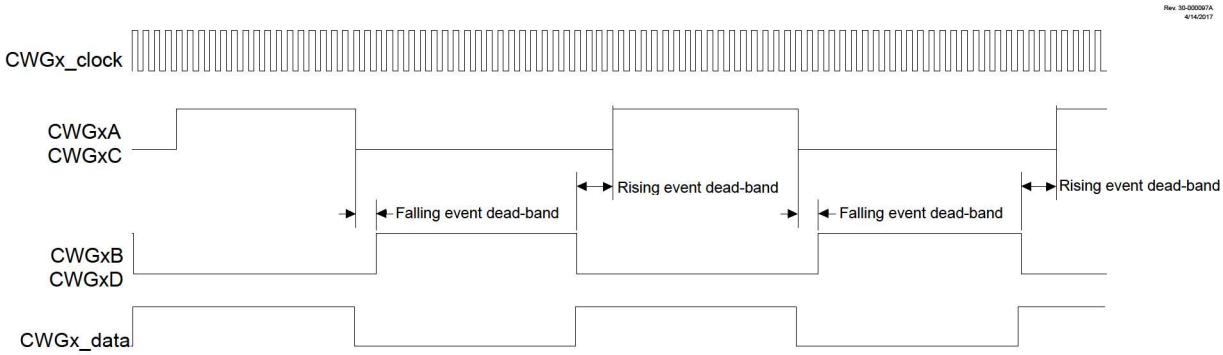

Figure 31-2. Simplified CWG Block Diagram (Half-Bridge Mode, MODE = 'b100)

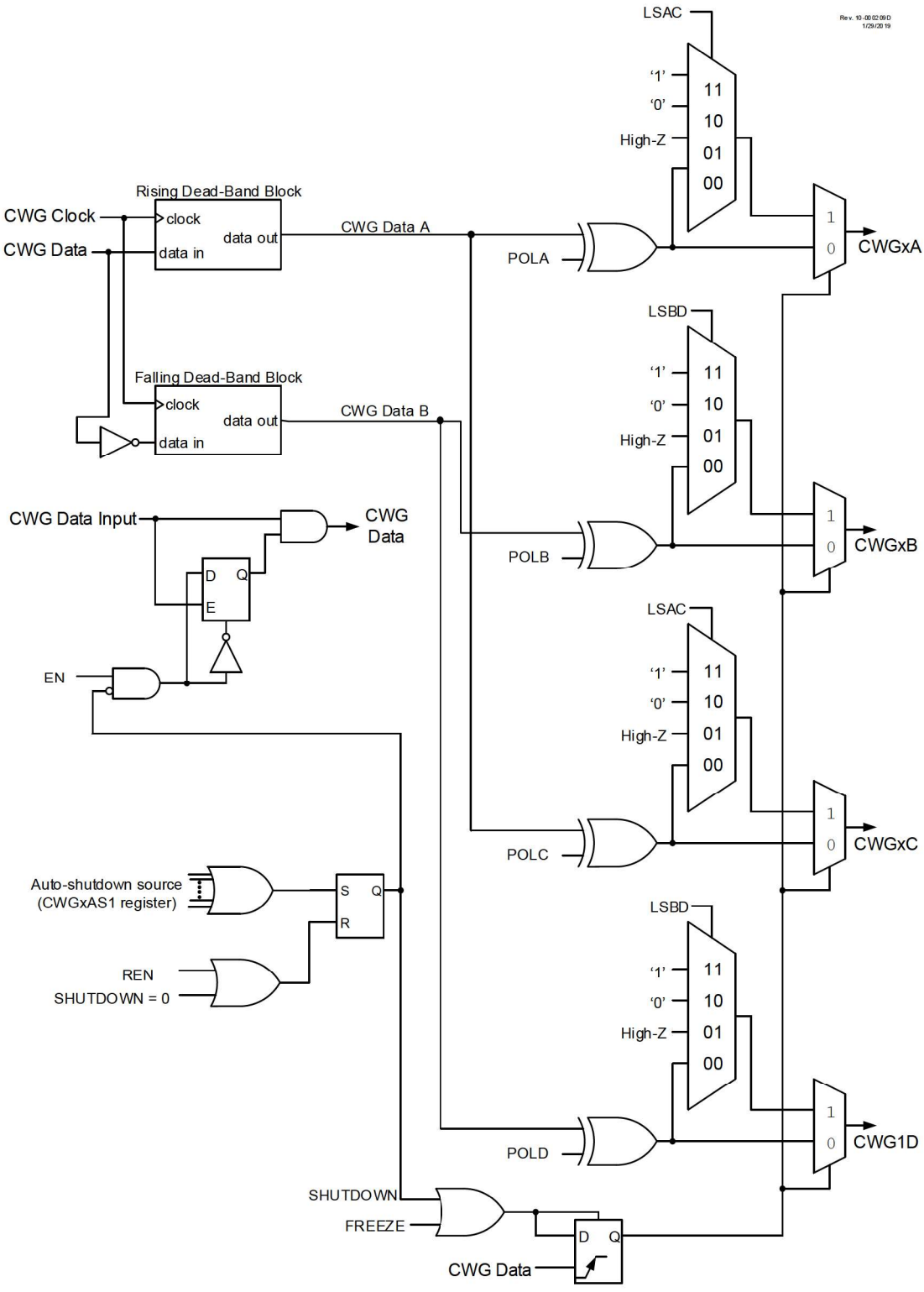

31.2.2 Push-Pull Mode

In Push-Pull mode, two output signals are generated, alternating copies of the input as illustrated in Figure 31-3. This alternation creates the Push-Pull effect required for driving some transformer-based power supply designs. Steering modes are not used in Push-Pull mode. A basic block diagram for the Push-Pull mode is shown in Figure 31-4.

The Push-Pull sequencer is reset whenever EN = 0 or if an auto-shutdown event occurs. The sequencer is clocked by the first input pulse, and the first output appears on CWGxA.

The unused outputs CWGxC and CWGxD drive copies of CWGxA and CWGxB, respectively, but with polarity controlled by the POLC and POLD bits, respectively.

Figure 31-3. CWG Push-Pull Mode Operation

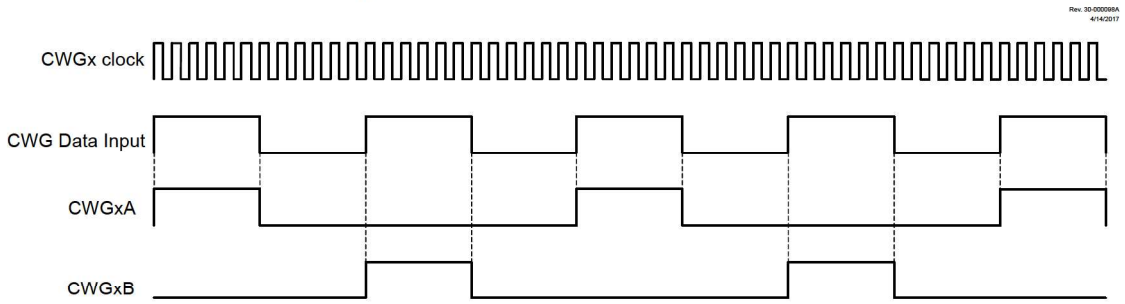

Figure 31-4. Simplified CWG Block Diagram (Push-Pull Mode, MODE = 'b101)

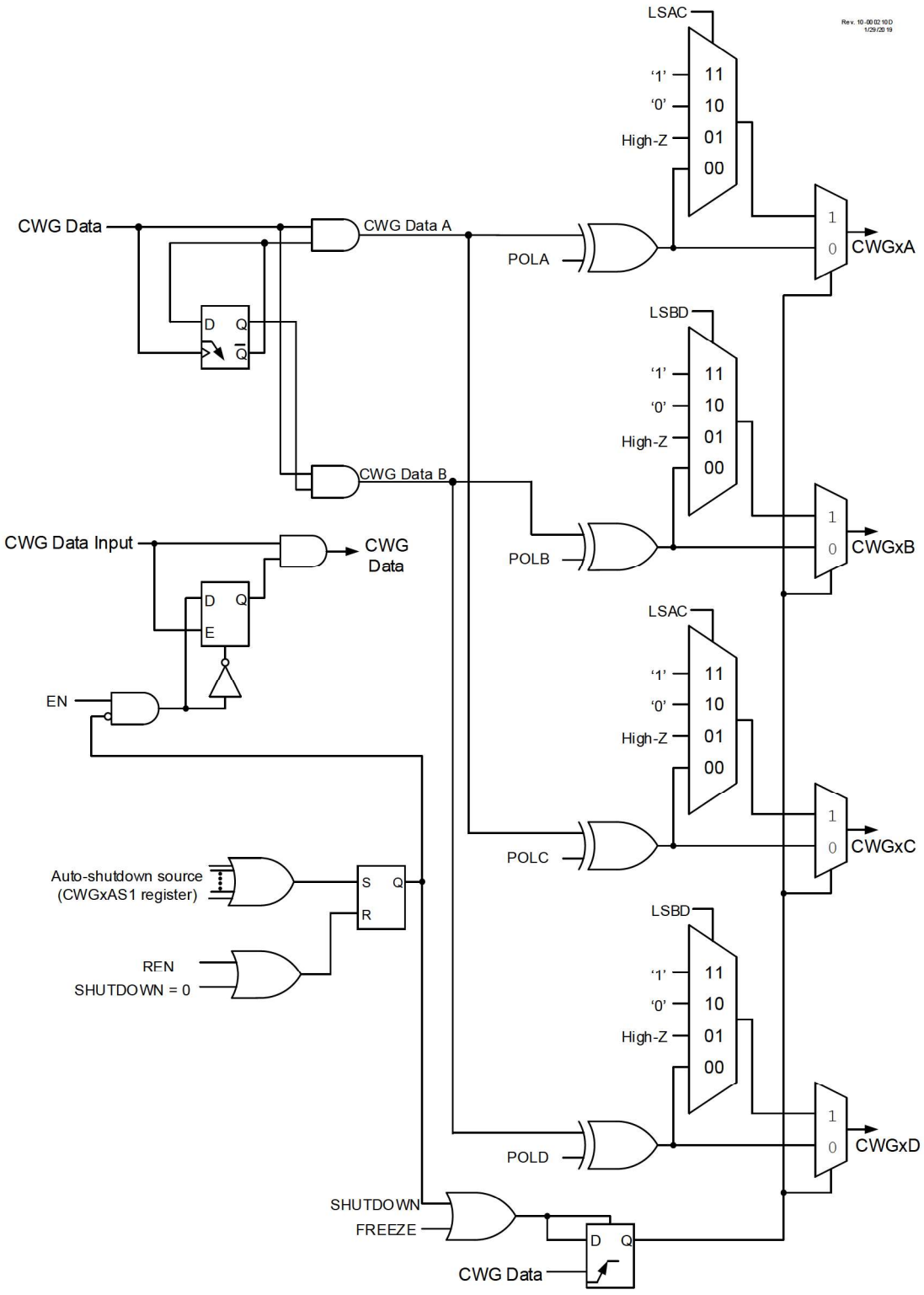

31.2.3 Full-Bridge Mode

In Forward and Reverse Full-Bridge modes, three outputs drive static values while the fourth is modulated by the input data signal. The mode selection may be toggled between forward and reverse by toggling the MODE[0] bit of the CWGxCON0 while keeping the MODE[2:1] bits static, without disabling the CWG module. When connected, as shown in Figure 31-5, the outputs are appropriate for a full-bridge motor driver. Each CWG output signal has independent polarity control, so the circuit can be adapted to high-active and low-active drivers. A simplified block diagram for the Full-Bridge modes is shown in Figure 31-6.

Figure 31-5. Example of Full-Bridge Application

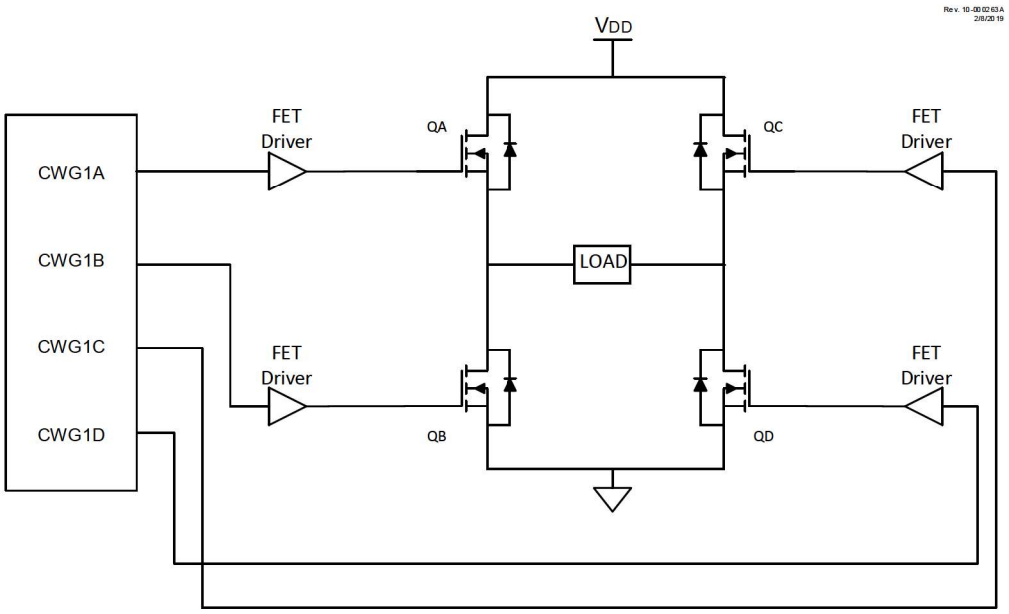

Figure 31-6. Simplified CWG Block Diagram (Forward and Reverse Full-Bridge Modes)

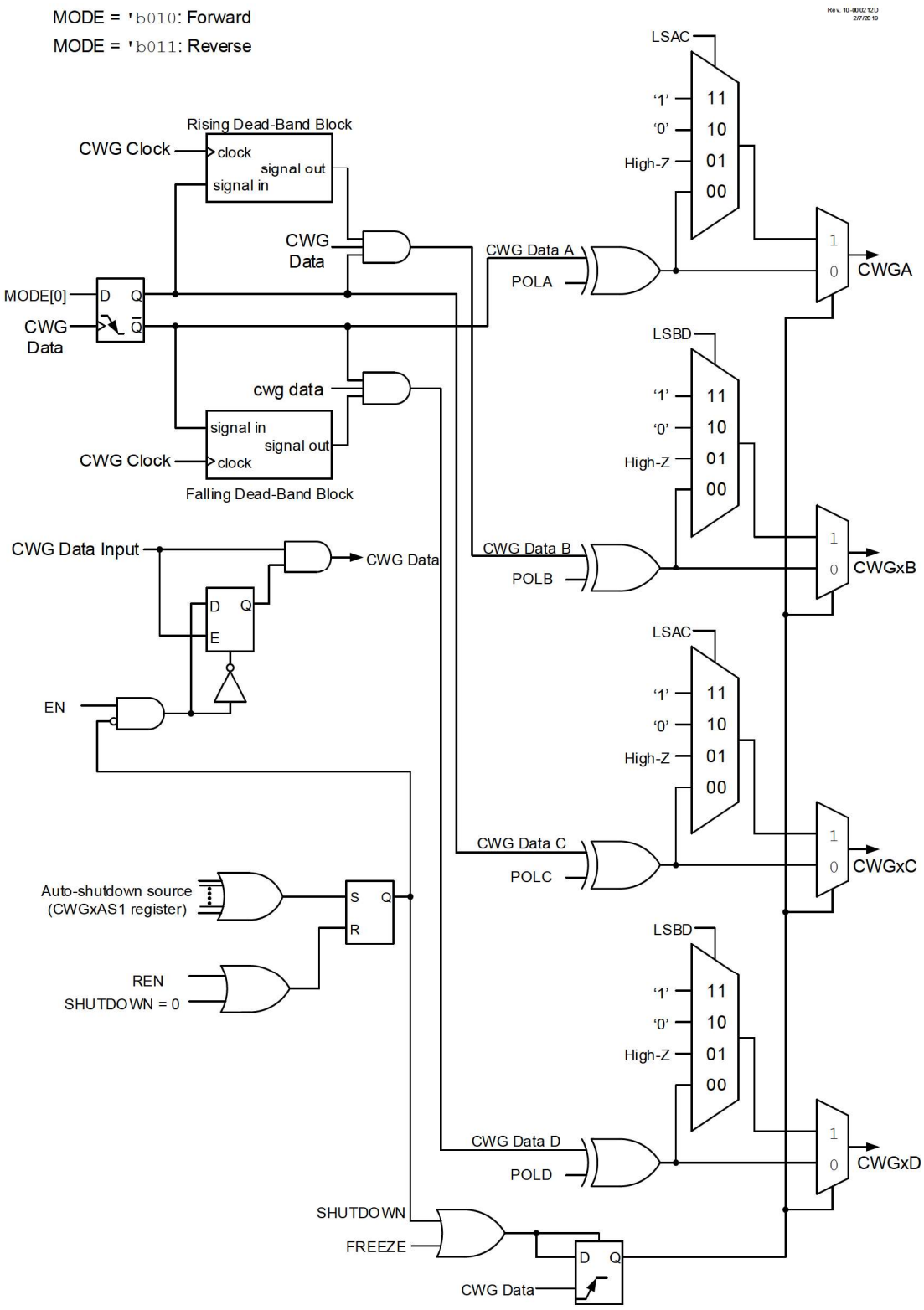

In Forward Full-Bridge mode (MODE = 'b010), CWGxA is driven to its Active state, CWGxB and CWGxC are driven to their Inactive state, and CWGxD is modulated by the input signal, as shown in Figure 31-7.

In Reverse Full-Bridge mode (MODE = 'b011), CWGxC is driven to its Active state, CWGxA and CWGxD are driven to their Inactive states, and CWGxB is modulated by the input signal, as shown in Figure 31-7.

In Full-Bridge mode, the dead-band period is used when there is a switch from forward to reverse or vice versa. This dead-band control is described in the Dead-Band Control section, with additional details in the Rising Edge and Reverse Dead Band and Falling Edge and Forward Dead Band sections. Steering modes are not used with either of the Full-Bridge modes.

Figure 31-7. Example of Full-Bridge Output

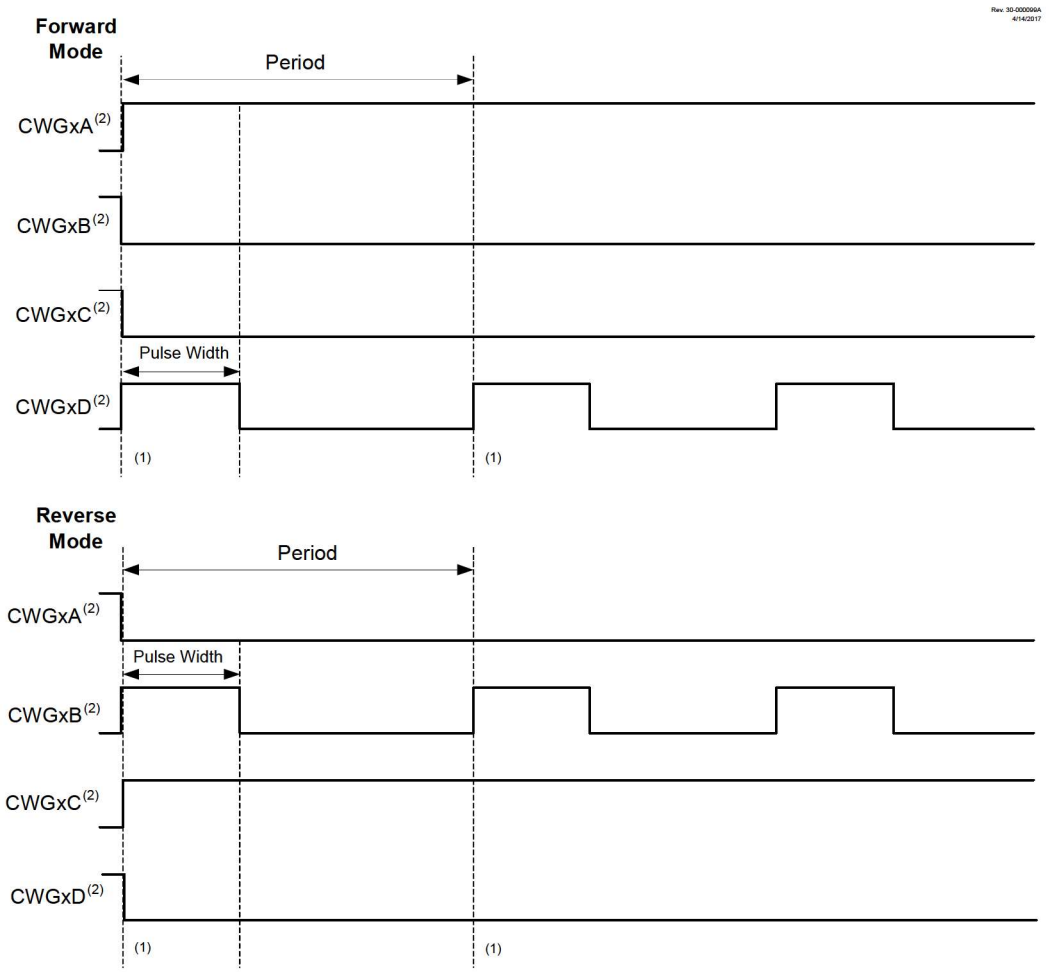

Notes:

1. A rising CWG data input creates a rising event on the modulated output.
2. Output signals shown as active-high; all POLy bits are clear.

31.2.3.1 Direction Change in Full-Bridge Mode

In Full-Bridge mode, changing the MODE[0] bit controls the forward/reverse direction. Direction changes occur on the next rising edge of the modulated input.

The sequence, described as follows, is illustrated in Figure 31-8.

1. The associated active output CWGxA and the inactive output CWGxC are switched to drive in the opposite direction.
2. The previously modulated output CWGxD is switched to the Inactive state, and the previously inactive output CWGxB begins to modulate.

3. CWG modulation resumes after the direction-switch dead band has elapsed.

Figure 31-8. Example of PWM Direction Change at Near 100% Duty Cycle

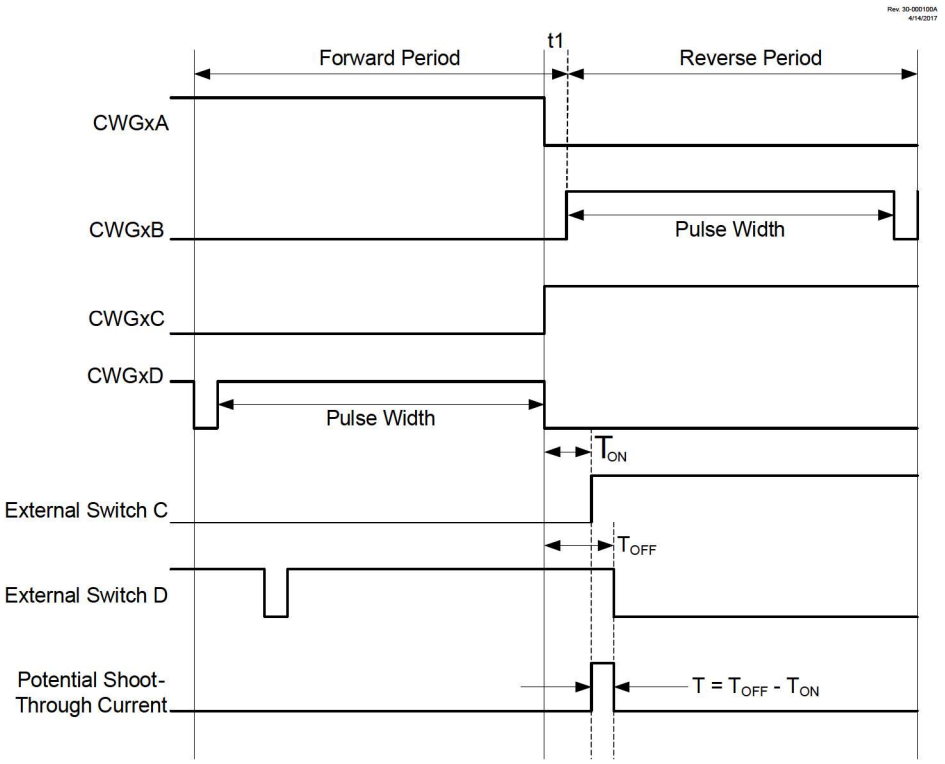

31.2.3.2 Dead-Band Delay in Full-Bridge Mode

Dead-band delay is important when either of the following conditions is true:

- The direction of the CWG output changes when the duty cycle of the data input is at or near 100%.
- The turn-off time of the power switch, including the power device and driver circuit, is greater than the turn-on time.

The dead-band delay is inserted only when changing directions, and only the modulated output is affected. The statically-configured outputs (CWGxA and CWGxC) are not afforded dead-band, and switch essentially simultaneously.

Figure 31-8 shows an example of the CWG outputs changing directions from forward to reverse, at near 100% duty cycle. In this example, at time t1, the output of CWGxA and CWGxD become inactive, while output CWGxC becomes active. Since the turn-off time of the power devices is longer than the turn-on time, a shoot-through current will flow through power devices QC and QD for the duration of 'T'. The same phenomenon will occur to power devices QA and QB for the CWG direction change from reverse to forward.

When changing the CWG direction at high duty cycle is required for an application, two possible solutions for eliminating the shoot-through current are:

1. Reduce the CWG duty cycle for one period before changing directions.
2. Use switch drivers that can drive the switches off faster than they can drive them on.

31.2.4 Steering Modes

In both Synchronous and Asynchronous Steering modes, the CWG Data can be steered to any combination of four CWG outputs. A fixed-value will be presented on all the outputs not used for the PWM output. Each output has independent polarity, steering, and shutdown options. Dead-band control is not used in either Steering mode.

For example, when STRA = 0 then the corresponding pin is held at the level defined by OVRA. When STRA = 1, then the pin is driven by the CWG Data signal.

The POLy bits control the signal polarity only when STRy = 1.

The CWG auto-shutdown operation also applies in Steering modes as described in Auto-Shutdown. An auto-shutdown event will only affect pins that have STRy = 1.

Figure 31-9. Simplified CWG Block Diagram (Output Steering Modes)

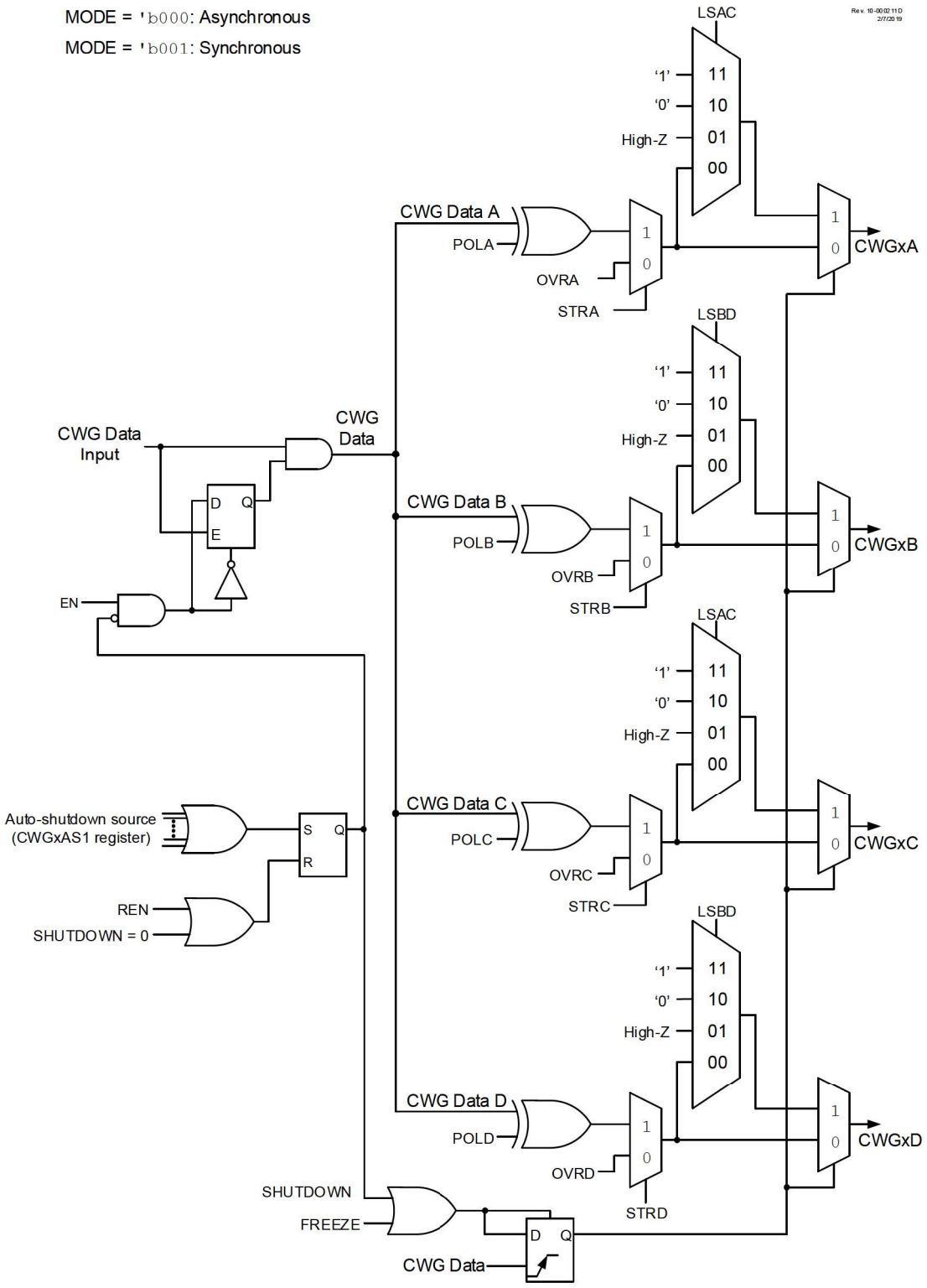

31.2.4.1 Synchronous Steering Mode

In Synchronous Steering mode (MODE = 'b001), the changes to steering selection registers take effect on the next rising edge of CWG Data (see figure below). In Synchronous Steering mode, the output will always produce a complete waveform.

Important: Only the STRx bits are synchronized; the OVRx bits are not synchronized.

Figure 31-10. Example of Synchronous Steering (MODE = 'b001)

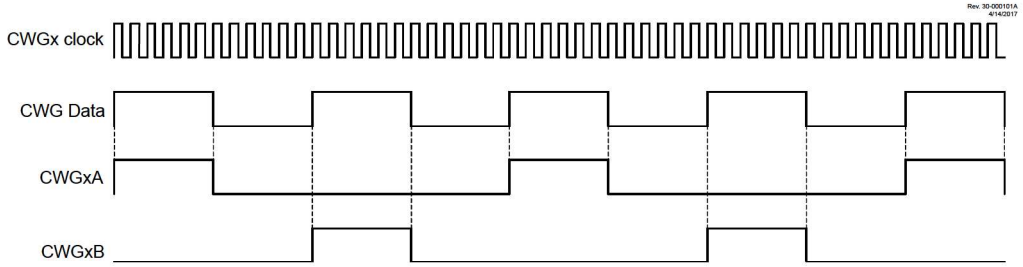

31.2.4.2 Asynchronous Steering Mode

In Asynchronous mode (MODE = 'b000), steering takes effect at the end of the instruction cycle that writes to STRx. In Asynchronous Steering mode, the output signal may be an incomplete waveform (see figure below). This operation may be useful when the user firmware needs to immediately remove a signal from the output pin.

Figure 31-11. Example of Asynchronous Steering (MODE = 'b000)

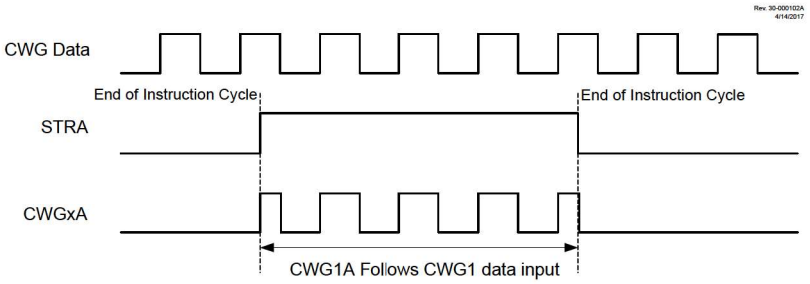

31.2.4.3 Start-up Considerations

The application hardware must use the proper external pull-up and/or pull-down resistors on the CWG output pins. This is required because all I/O pins are forced to high-impedance at Reset.

The Polarity Control bits (POLy) allow the user to choose whether the output signals are active-high or active-low.

31.3 Clock Source

The clock source is used to drive the dead-band timing circuits. The CWG module allows the following clock sources to be selected:

- F_{OSC} (system clock)
- HFINTOSC

When the HFINTOSC is selected, the HFINTOSC will be kept running during Sleep. Therefore, CWG modes requiring dead-band can operate in Sleep, provided that the CWG data input is also active during Sleep. The clock sources are selected using the CS bit. The system clock F_{OSC}, is disabled in Sleep and thus dead-band control cannot be used.

31.4 Selectable Input Sources

The CWG generates the output waveforms from the input sources which are selected with the ISM bits. Refer to the CWGxISM register for more details.

31.5 Output Control

31.5.1 CWG Output

Each CWG output can be routed to a Peripheral Pin Select (PPS) output via the RxyPPS register. Refer to the **"PPS - Peripheral Pin Select Module"** chapter for more details.

31.5.2 Polarity Control

The polarity of each CWG output can be selected independently. When the output polarity bit is set, the corresponding output is active-high. Clearing the output polarity bit configures the corresponding output as active-low. However, polarity does not affect the override levels. Output polarity is selected with the POLy bits. Auto-shutdown and steering options are unaffected by polarity.

31.6 Dead-Band Control

The dead-band control provides non-overlapping complementary outputs to prevent shoot-through current when the outputs switch. Dead-band operation is employed for Half-Bridge and Full-Bridge modes. The CWG contains two 6-bit dead-band counters. One is used for the rising edge of the input source control in Half-Bridge mode or for reverse direction change dead-band in Full-Bridge mode. The other is used for the falling edge of the input source control in Half-Bridge mode or for forward direction change dead-band in Full-Bridge mode.

Dead-band is timed by counting CWG clock periods from zero up to the value in the rising or falling dead-band counter registers.

31.6.1 Dead-Band Functionality In Half-Bridge Mode

In Half-Bridge mode, the dead-band counters dictate the delay between the falling edge of the normal output and the rising edge of the inverted output. This can be seen in Figure 31-1.

31.6.2 Dead-Band Functionality In Full-Bridge Mode

In Full-Bridge mode, the dead-band counters are used when undergoing a direction change. The MODE[0] bit can be set or cleared while the CWG is running, allowing for changes from Forward to Reverse mode. The CWGxA and CWGxC signals will change immediately upon the first rising input edge following a direction change, but the modulated signals (CWGxB or CWGxD, depending on the direction of the change) will experience a delay dictated by the dead-band counters.

31.7 Rising Edge and Reverse Dead-Band

In Half-Bridge mode, the rising edge dead-band delays the turn-on of the CWGxA output after the rising edge of the CWG data input. In Full-Bridge mode, the reverse dead-band delay is only inserted when changing directions from Forward mode to Reverse mode, and only the modulated output, CWGxB, is affected.

The CWGxDBR register determines the duration of the dead-band interval on the rising edge of the input source signal. This duration is from 0 to 64 periods of the CWG clock. The following figure illustrates different dead-band delays for rising and falling CWG Data events.

Figure 31-12. Dead-Band Operation, CWGxDBR = 0x01, CWGxDBF = 0x02

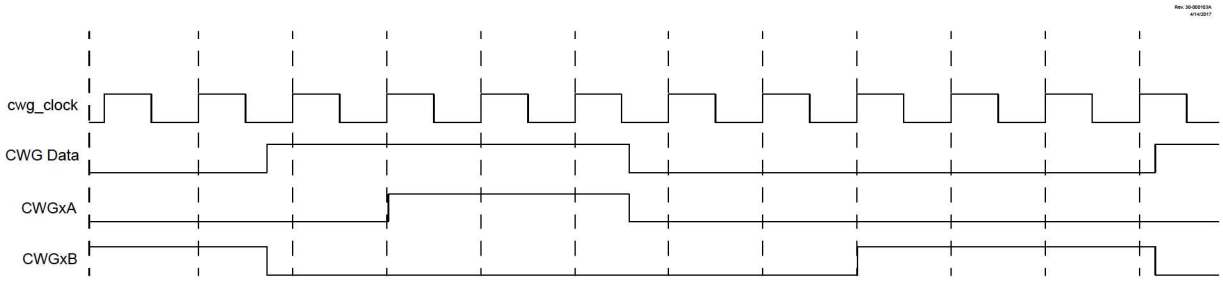

Dead-band is always initiated on the edge of the input source signal. A count of zero indicates that no dead-band is present.

If the input source signal reverses polarity before the dead-band count is completed, then no signal will be seen on the respective output.

The CWGxDBR register value is double-buffered. When EN = 0, the buffer is loaded when CWGxDBR is written. When EN = 1, then the buffer will be loaded at the rising edge following the first falling edge of the CWG Data, after the LD bit is set.

31.8 Falling Edge and Forward Dead Band

In Half-Bridge mode, the falling edge dead band delays the turn-on of the CWGxB output at the falling edge of the CWG data input. In Full-Bridge mode, the forward dead-band delay is only inserted when changing directions from Reverse mode to Forward mode, and only the modulated output CWGxD is affected.

The CWGxDBF register determines the duration of the dead-band interval on the falling edge of the input source signal. This duration is from zero to 64 periods of CWG clock.

Dead-band delay is always initiated on the edge of the input source signal. A count of zero indicates that no dead band is present.

If the input source signal reverses polarity before the dead-band count is completed, then no signal will be seen on the respective output.

Figure 31-13. Dead-Band Operation, CWGxDBR = 0x03, CWGxDBF = 0x06, Source Shorter Than Dead Band

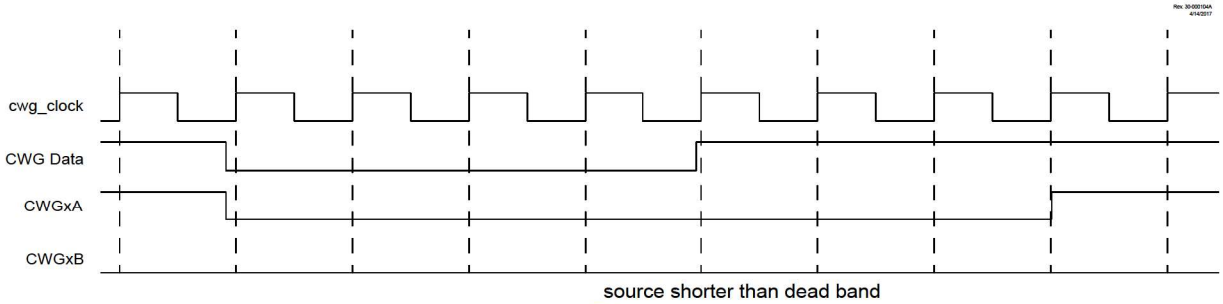

The CWGxDBF register value is double-buffered. When EN = 0, the buffer is loaded when CWGxDBF is written. When EN = 1, then the buffer will be loaded at the rising edge following the first falling edge of the data input after the LD is set.

31.9 Dead-Band Jitter

When the rising and falling edges of the input source are asynchronous to the CWG clock, it creates jitter in the dead-band time delay. The maximum jitter is equal to one CWG clock period. Refer to the equations below for more details.

Equation 31-1. Dead-Band Delay Time Calculation

$$T_{DEAD-BAND_MIN} = \frac{1}{F_{CWG_CLOCK}} \bullet DBx$$

$$T_{DEAD-BAND_MAX} = \frac{1}{F_{CWG_CLOCK}} \bullet (DBx + 1)$$

$$T_{JITTER} = T_{DEAD-BAND_MAX} - T_{DEAD-BAND_MIN}$$

$$T_{JITTER} = \frac{1}{F_{CWG_CLOCK}}$$

$$T_{DEAD-BAND_MAX} = T_{DEAD-BAND_MIN} + T_{JITTER}$$

Dead-Band Delay Example Calculation

$DBx = 0x0A = 10$

$F_{CWG_CLOCK} = 8\ MHz$

$T_{JITTER} = \frac{1}{8\ MHz} = 125ns$

$T_{DEAD-BAND_MIN} = 125ns \bullet 10 = 1.25\mu s$

$T_{DEAD-BAND_MAX} = 1.25\mu s + 0.125\ \mu s = 1.37\mu s$

31.10 Auto-Shutdown

Auto-shutdown is a method to immediately override the CWG output levels with specific overrides that allow for safe shutdown of the circuit. The Shutdown state can be either cleared automatically or held until cleared by software. The auto-shutdown circuit is illustrated in the following figure.

Figure 31-14. CWG Shutdown Block Diagram

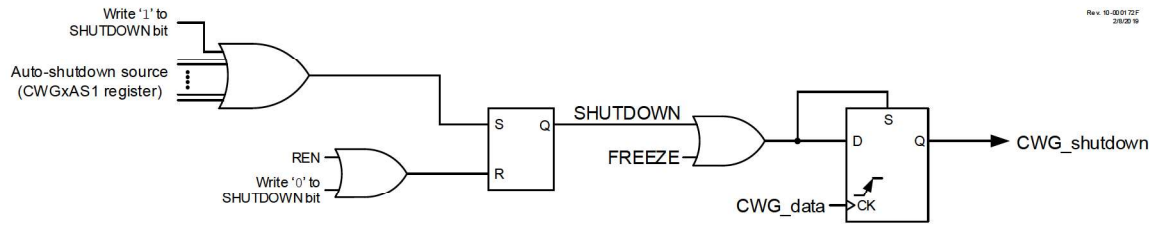

31.10.1 Shutdown

The Shutdown state can be entered by either of the following two methods:

- Software Generated
- External Input

31.10.2 Software Generated Shutdown

Setting the SHUTDOWN bit will force the CWG into the Shutdown state.

When the auto-restart is disabled, the Shutdown state will persist as long as the SHUTDOWN bit is set.

When auto-restart is enabled, the SHUTDOWN bit will clear automatically and resume operation on the next rising edge event. The SHUTDOWN bit indicates when a shutdown condition exists. The bit may be set or cleared in software or by hardware.

31.10.3 External Input Source

External shutdown inputs provide the fastest way to safely suspend CWG operation in the event of a Fault condition. When any of the selected shutdown inputs goes active, the CWG outputs will immediately go to the selected override levels without software delay. The override levels are selected by the LSBD and LSAC bits. Several input sources can be selected to cause a shutdown condition. All input sources are active-low. The shutdown input sources are individually enabled by the ASyE bits.

Important: Shutdown inputs are level sensitive, not edge sensitive. The Shutdown state cannot be cleared, except by disabling auto-shutdown, as long as the shutdown input level persists.

31.10.4 Pin Override Levels

The levels driven to the CWG outputs during an auto-shutdown event are controlled by the LSBD and LSAC bits. The LSBD bits control CWGxB/D output levels, while the LSAC bits control the CWGxA/C output levels.

31.10.5 Auto-Shutdown Interrupts

When an auto-shutdown event occurs, either by software or hardware setting SHUTDOWN, the CWGxIF flag bit of the PIRx register is set.

31.11 Auto-Shutdown Restart

After an auto-shutdown event has occurred, there are two ways to resume operation:

- Software controlled
- Auto-restart

In either case, the shutdown source must be cleared before the restart can take place. That is, either the shutdown condition must be removed, or the corresponding ASyE bit must be cleared.

31.11.1 Software-Controlled Restart

When the REN bit is clear (REN = 0), the CWG module must be restarted after an auto-shutdown event through software.

Once all auto-shutdown sources are removed, the software must clear the SHUTDOWN bit. Once SHUTDOWN is cleared, the CWG module will resume operation upon the first rising edge of the CWG data input.

Important: The SHUTDOWN bit cannot be cleared in software if the auto-shutdown condition is still present.

Figure 31-15. Shutdown Functionality, Auto-Restart Disabled (REN = 0, LSAC = 'b01, LSBD = 'b01)

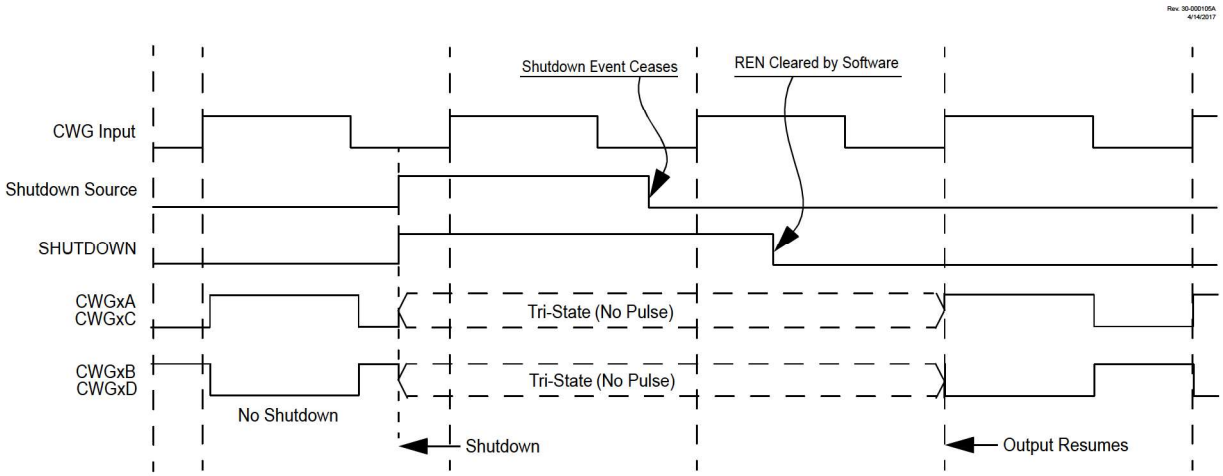

31.11.2 Auto-Restart

When the REN bit is set (REN = 1), the CWG module will restart from the Shutdown state automatically.

Once all auto-shutdown conditions are removed, the hardware will automatically clear the SHUTDOWN bit. Once SHUTDOWN is cleared, the CWG module will resume operation upon the first rising edge of the CWG data input.

Important: The SHUTDOWN bit cannot be cleared in software if the auto-shutdown condition is still present.

Figure 31-16. Shutdown Functionality, Auto-Restart Enabled (REN = 1, LSAC = 'b01, LSBD = 'b01)

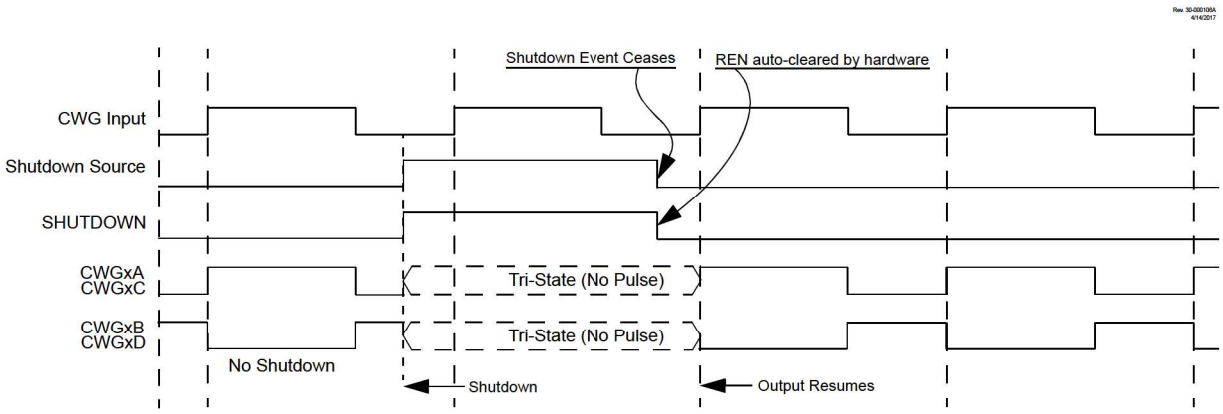

31.12 Operation During Sleep

The CWG module operates independently from the system clock and will continue to run during Sleep, provided that the clock and input sources selected remain active.

The HFINTOSC remains active during Sleep when all the following conditions are met:

- CWG module is enabled
- Input source is active
- HFINTOSC is selected as the clock source, regardless of the system clock source selected.

In other words, if the HFINTOSC is simultaneously selected as the system clock and the CWG clock source, when the CWG is enabled and the input source is active, then the CPU will go idle during Sleep, but the HFINTOSC will remain active and the CWG will continue to operate. This will have a direct effect on the Sleep mode current.

31.13 Configuring the CWG

1. Ensure that the TRIS control bits corresponding to CWG outputs are set so that all are configured as inputs, ensuring that the outputs are inactive during setup. External hardware must ensure that pin levels are held to safe levels.
2. Clear the EN bit, if not already cleared.
3. Configure the MODE bits to set the output operating mode.
4. Configure the POLy bits to set the output polarities.
5. Configure the ISM bits to select the data input source.
6. If a steering mode is selected, configure the STRy bits to select the desired output on the CWG outputs.
7. Configure the LSBD and LSAC bits to select the auto-shutdown output override states (this is necessary even if not using auto-shutdown because start-up will be from a Shutdown state).
8. If auto-restart is desired, set the REN bit.
9. If auto-shutdown is desired, configure the ASyE bits to select the shutdown source.
10. Set the desired rising and falling dead-band times with the CWGxDBR and CWGxDBF registers.
11. Select the clock source with the CS bit.

12. Set the EN bit to enable the module.
13. Clear the TRIS bits that correspond to the CWG outputs to set them as outputs.

If auto-restart is to be used, set the REN bit and the SHUTDOWN bit will be cleared automatically. Otherwise, clear the SHUTDOWN bit in software to start the CWG.

31.14 Register Definitions: CWG Control

Long bit name prefixes for the CWG peripherals are shown in the table below. Refer to the **"Long Bit Names"** section in the **"Register and Bit Naming Conventions"** chapter for more information.

Table 31-1. CWG Long bit name prefixes

Peripheral	Bit Name Prefix
CWG1	CWG1

31.14.1 CWGxCON0

Name: CWGxCON0
Address: 0x03C0

CWG Control Register 0

Bit	7	6	5	4	3	2	1	0
	EN	LD				MODE[2:0]		
Access	R/W	R/W/HC				R/W	R/W	R/W
Reset	0	0				0	0	0

Bit 7 – EN CWG Enable

Value	Description
1	Module is enabled
0	Module is disabled

Bit 6 – LD CWG1 Load Buffers(1)

Value	Description
1	Dead-band count buffers to be loaded on CWG data rising edge, following first falling edge after this bit is set
0	Buffers remain unchanged

Bits 2:0 – MODE[2:0] CWG Mode

Value	Description
111	Reserved
110	Reserved
101	CWG outputs operate in Push-Pull mode
100	CWG outputs operate in Half-Bridge mode
011	CWG outputs operate in Reverse Full-Bridge mode
010	CWG outputs operate in Forward Full-Bridge mode
001	CWG outputs operate in Synchronous Steering mode
000	CWG outputs operate in Asynchronous Steering mode

Note:

1. This bit can only be set after EN = 1; it cannot be set in the same cycle when EN is set.

31.14.2 CWGxCON1

Name: CWGxCON1
Address: 0x03C1

CWG Control Register 1

Bit	7	6	5	4	3	2	1	0
			IN		POLD	POLC	POLB	POLA
Access			R		R/W	R/W	R/W	R/W
Reset			x		0	0	0	0

Bit 5 – IN CWG Input Value (read-only)

Value	Description
1	CWG data input is a logic 1
0	CWG data input is a logic 0

Bits 0, 1, 2, 3 – POLy CWG Output 'y' Polarity

Value	Description
1	Signal output is inverted polarity
0	Signal output is normal polarity

31.14.3 CWGxCLK

Name: CWGxCLK
Address: 0x03BC

CWG Clock Input Selection Register

Bit	7	6	5	4	3	2	1	0
								CS
Access								R/W
Reset								0

Bit 0 – CS CWG Clock Source Selection Select

Value	Description
1	HFINTOSC (remains operating during Sleep)
0	F_{OSC}

31.14.4 CWGxISM

Name: CWGxISM
Address: 0x03BD

CWGx Input Selection Register

Bit	7	6	5	4	3	2	1	0
					ISM[3:0]			
Access					R/W	R/W	R/W	R/W
Reset					0	0	0	0

Bits 3:0 – ISM[3:0] CWG Data Input Source Select

ISM	Input Selection
	CWG1
1111	CLC4_OUT
1110	CLC3_OUT
1101	CLC2_OUT
1100	CLC1_OUT
1011	DSM1_OUT
1010	CMP2_OUT
1001	CMP1_OUT
1000	NCO1_OUT
0111	PWM3S1P2_OUT
0110	PWM3S1P1_OUT
0101	PWM2S1P2_OUT
0100	PWM2S1P1_OUT
0011	PWM1S1P2_OUT
0010	PWM1S1P1_OUT
0001	CCP1_OUT
0000	Pin selected by CWG1PPS

31.14.5 CWGxSTR

Name: CWGxSTR
Address: 0x03C4

CWG Steering Control Register[1]

Bit	7	6	5	4	3	2	1	0
	OVRD	OVRC	OVRB	OVRA	STRD	STRC	STRB	STRA
Access	R/W	R/W	R/W	R/W	R/W	R/W	R/W	R/W
Reset	0	0	0	0	0	0	0	0

Bits 4, 5, 6, 7 – OVRy Steering Data OVR'y'

Value	Condition	Description
x	STRy = 1	CWGx'y' output has the CWG data input waveform with polarity control from POLy bit
1	STRy = 0 and POLy = x	CWGx'y' output is high
0	STRy = 0 and POLy = x	CWGx'y' output is low

Bits 0, 1, 2, 3 – STRy STR'y' Steering Enable[2]

Value	Description
1	CWGx'y' output has the CWG data input waveform with polarity control from POLy bit
0	CWGx'y' output is assigned to value of OVRy bit

Notes:

1. The bits in this register apply only when MODE = 'b00x (CWGxCON0, Steering modes).
2. This bit is double-buffered when MODE = 'b001.

31.14.6 CWGxAS0

Name: CWGxAS0
Address: 0x03C2

CWG Auto-Shutdown Control Register 0

Bit	7	6	5	4	3	2	1	0
	SHUTDOWN	REN	LSBD[1:0]		LSAC[1:0]			
Access	R/W/HS/HC	R/W	R/W	R/W	R/W	R/W		
Reset	0	0	0	1	0	1		

Bit 7 – SHUTDOWN Auto-Shutdown Event Status(1,2)

Value	Description
1	An auto-shutdown state is in effect
0	No auto-shutdown event has occurred

Bit 6 – REN Auto-Restart Enable

Value	Description
1	Auto-restart is enabled
0	Auto-restart is disabled

Bits 5:4 – LSBD[1:0] CWGxB and CWGxD Auto-Shutdown State Control

Value	Description
11	A logic '1' is placed on CWGxB/D when an auto-shutdown event occurs.
10	A logic '0' is placed on CWGxB/D when an auto-shutdown event occurs.
01	Pin is tri-stated on CWGxB/D when an auto-shutdown event occurs.
00	The Inactive state of the pin, including polarity, is placed on CWGxB/D after the required dead-band interval when an auto-shutdown event occurs.

Bits 3:2 – LSAC[1:0] CWGxA and CWGxC Auto-Shutdown State Control

Value	Description
11	A logic '1' is placed on CWGxA/C when an auto-shutdown event occurs.
10	A logic '0' is placed on CWGxA/C when an auto-shutdown event occurs.
01	Pin is tri-stated on CWGxA/C when an auto-shutdown event occurs.
00	The Inactive state of the pin, including polarity, is placed on CWGxA/C after the required dead-band interval when an auto-shutdown event occurs.

Notes:

1. This bit may be written while EN = 0, to place the outputs into the shutdown configuration.
2. The outputs will remain in Auto-Shutdown state until the next rising edge of the CWG data input after this bit is cleared.

31.14.7 CWGxAS1

Name: CWGxAS1
Address: 0x03C3

CWG Auto-Shutdown Control Register 1

Bit	7	6	5	4	3	2	1	0
	AS7E	AS6E	AS5E	AS4E	AS3E	AS2E	AS1E	AS0E
Access	R/W	R/W	R/W	R/W	R/W	R/W	R/W	R/W
Reset	0	0	0	0	0	0	0	0

Bits 0, 1, 2, 3, 4, 5, 6, 7 – ASyE CWG Auto-shutdown Source Enable(1,2)

ASyE	Auto-Shutdown Source
	CWG1
AS7E	Reserved
AS6E	CLC4_OUT
AS5E	CLC2_OUT
AS4E	CMP2_OUT
AS3E	CMP1_OUT
AS2E	TMR4_Postscaler_OUT
AS1E	TMR2_Postscaler_OUT
AS0E	Pin selected by CWG1PPS

Notes:

1. This bit may be written while EN = 0, to place the outputs into the shutdown configuration.
2. The outputs will remain in Auto-Shutdown state until the next rising edge of the CWG data input after this bit is cleared.

31.14.8 CWGxDBR

Name: CWGxDBR
Address: 0x03BE

CWG Rising Dead-Band Count Register

Bit	7	6	5	4	3	2	1	0
			DBR[5:0]					
Access			R/W	R/W	R/W	R/W	R/W	R/W
Reset			x	x	x	x	x	x

Bits 5:0 – DBR[5:0] CWG Rising Edge-Triggered Dead-Band Count
Reset States: POR/BOR = xxxxxx
All Other Resets = uuuuuu

Value	Description
n	Dead-band is active no less than n, and no more than n+1, CWG clock periods after the rising edge
0	0 CWG clock periods. Dead-band generation is bypassed

31.14.9 CWGxDBF

Name: CWGxDBF
Address: 0x03BF

CWG Falling Dead-Band Count Register

Bit	7	6	5	4	3	2	1	0
			DBF[5:0]					
Access			R/W	R/W	R/W	R/W	R/W	R/W
Reset			x	x	x	x	x	x

Bits 5:0 – DBF[5:0] CWG Falling Edge-Triggered Dead-Band Count
Reset States: POR/BOR = xxxxxx
All Other Resets = uuuuuu

Value	Description
n	Dead-band is active no less than n, and no more than n+1, CWG clock periods after the falling edge
0	0 CWG clock periods. Dead-band generation is bypassed

31.15 Register Summary - CWG

Address	Name	Bit Pos.	7	6	5	4	3	2	1	0
0x00 ... 0x03BB	Reserved									
0x03BC	CWG1CLK	7:0								CS
0x03BD	CWG1ISM	7:0					ISM[3:0]			
0x03BE	CWG1DBR	7:0			DBR[5:0]					
0x03BF	CWG1DBF	7:0			DBF[5:0]					
0x03C0	CWG1CON0	7:0	EN	LD				MODE[2:0]		
0x03C1	CWG1CON1	7:0			IN		POLD	POLC	POLB	POLA
0x03C2	CWG1AS0	7:0	SHUTDOWN	REN	LSBD[1:0]		LSAC[1:0]			
0x03C3	CWG1AS1	7:0	AS7E	AS6E	AS5E	AS4E	AS3E	AS2E	AS1E	AS0E
0x03C4	CWG1STR	7:0	OVRD	OVRC	OVRB	OVRA	STRD	STRC	STRB	STRA

32. NCO - Numerically Controlled Oscillator Module

The Numerically Controlled Oscillator (NCO) module is a timer that uses overflow from the addition of an increment value to divide the input frequency. The advantage of the addition method over a simple counter driven timer is that the output frequency resolution does not vary with the divider value. The NCO is most useful for applications that require frequency accuracy and fine resolution at a fixed duty cycle.

Features of the NCO include:

- 20-Bit Increment Function
- Fixed Duty Cycle (FDC) mode
- Pulse Frequency (PF) mode
- Output Pulse Width Control
- Multiple Clock Input Sources
- Output Polarity Control
- Interrupt Capability

The following figure is a simplified block diagram of the NCO module.

Figure 32-1. Numerically Controlled Oscillator Module Simplified Block Diagram

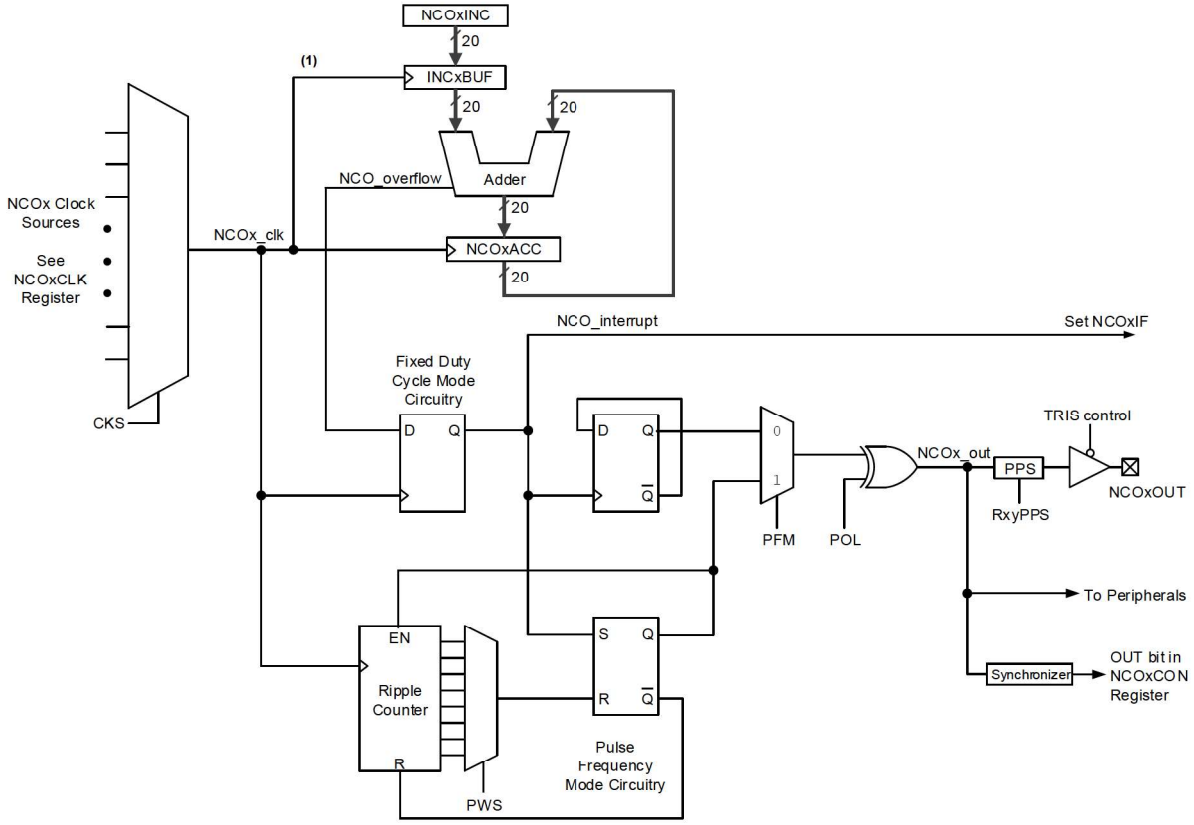

Note 1: The increment registers are double-buffered to allow for value changes to be made without first disabling the NCO module. The full increment value is loaded into the buffer registers on the second rising edge of the NCOx_clk signal that occurs immediately after a write to the NCOxINCL register. The buffers are not user-accessible and are shown here for reference.

32.1 NCO Operation

The NCO operates by repeatedly adding a fixed value to an accumulator. Additions occur at the input clock rate. The accumulator will overflow with a carry periodically, which is the raw NCO output (NCO_overflow). This effectively reduces the input clock by the ratio of the addition value to the maximum accumulator value. See the following equation.

Equation 32-1. NCO Overflow Frequency

$$F_{OVERFLOW} = \frac{NCO\ Clock\ Frequency \times Increment\ Value}{2^{20}}$$

It should be apparent from the equation that there is a linear relationship between the increment value and the overflow frequency. This linear advantage over divide-by-n timers comes at the cost of output jitter. However, the jitter is always plus or minus one NCO clock period that occurs periodically, depending on the division remainder. For example, when there is no division remainder then there is no jitter, whereas a division remainder of 0.5 will result in a jitter frequency one half of the overflow frequency.

32.1.1 NCO Clock Sources

The NCO can be clocked from a variety of sources including the system clock, internal timers, and other peripherals. The NCO clock source is selected by configuring the CKS bits.

32.1.2 Accumulator

The accumulator is a 20-bit register. Read and write access to the accumulator is available through three registers:

- NCOxACCL
- NCOxACCH
- NCOxACCU

32.1.3 Adder

The NCO adder is a full adder, which operates synchronously from the source clock. The addition of the previous result and the increment value replaces the accumulator value on the rising edge of each input clock.

32.1.4 Increment Registers

The increment value is stored in three registers making up a 20-bit word. In order of LSB to MSB they are:

- NCOxINCL
- NCOxINCH
- NCOxINCU

The increment registers are readable and writable and are double-buffered to allow value changes to be made without first disabling the NCO module.

When the NCO module is enabled, the NCOxINCU and NCOxINCH registers should be written first, then the NCOxINCL register. Writing to the NCOxINCL register initiates the increment buffer registers to be loaded simultaneously on the second rising edge of the NCO_clk signal.

When the NCO module is disabled, the increment buffers are loaded immediately after a write to the increment registers.

Important: The increment buffer registers are not user-accessible.

32.2 Fixed Duty Cycle Mode

In Fixed Duty Cycle (FDC) mode, every time the accumulator overflows, the output is toggled. This provides a 50% duty cycle at half the $F_{OVERFLOW}$ frequency, provided that the increment value remains constant. For more information, see the figure below.

The FDC mode is selected by clearing the PFM bit.

Figure 32-2. FDC Output Mode Timing Diagram

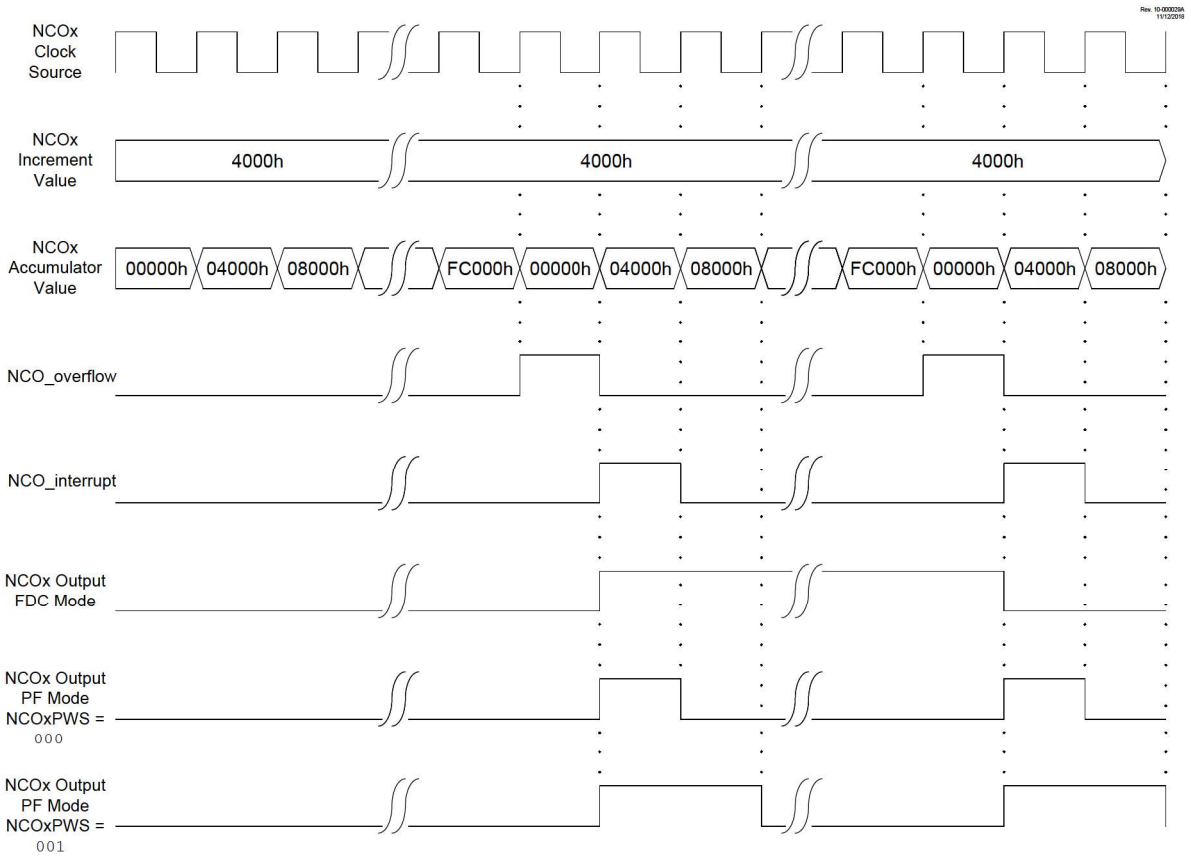

32.3 Pulse Frequency Mode

In Pulse Frequency (PF) mode, the output becomes active on the rising clock edge immediately following the overflow event, and goes inactive 1 to 128 clock periods later, determined by the PWS bits. This provides a pulsed output at the $F_{OVERFLOW}$ frequency. For more information, refer to the figure above.

Important: When the selected pulse width is greater than the accumulator overflow time frame, then the NCO output does not toggle.

The level of the active and inactive states is determined by the POL bit.

PF mode is selected by setting the PFM bit.

32.4 Output Polarity Control

The last stage in the NCO module is the output polarity. The POL bit selects the output polarity. The active level of the Pulse Frequency mode is high true when the POL bit is cleared.

Changing the polarity while the interrupts are enabled will cause an interrupt for the resulting output transition.

The NCO output signal (NCOx_out) is available by internal routing to several other peripherals.

32.5 Interrupts

When the accumulator overflows, the NCO Interrupt Flag bit, NCOxIF, in the associated PIR register is set. To enable interrupt service on this event, the following bits must be set:

- EN bit
- NCOxIE bit in the associated PIE register
- Peripheral and Global Interrupt Enable bits

The interrupt must be cleared by software by clearing the NCOxIF bit in the Interrupt Service Routine.

32.6 Effects of a Reset

All of the NCO registers are cleared to zero as the result of any Reset.

32.7 Operation in Sleep

The NCO module operates independently from the system clock and will continue to run during Sleep, provided that the clock source selected remains active.

The HFINTOSC remains active during Sleep when the NCO module is enabled and the HFINTOSC is selected as the clock source, regardless of the system clock source selected.

In other words, if the HFINTOSC is simultaneously selected as the system clock and the NCO clock source, when the NCO is enabled, the CPU will go Idle during Sleep, but the NCO will continue to operate and the HFINTOSC will remain active.

With a clock running, it will have a direct effect on the Sleep mode current.

32.8 Register Definitions: NCO

Long bit name prefixes for the NCO peripherals are shown in the table below. Refer to the **"Long Bit Names"** section in the **"Register and Bit Naming Conventions"** chapter for more information.

Table 32-1. NCO Long Bit Name Prefixes

Peripheral	Bit Name Prefix
NCO1	NCO1

32.8.1 NCOxCON

Name: NCOxCON
Address: 0x0446

NCO Control Register

Bit	7	6	5	4	3	2	1	0
	EN		OUT	POL				PFM
Access	R/W		R	R/W				R/W
Reset	0		0	0				0

Bit 7 – EN NCO Enable

Value	Description
1	NCO module is enabled
0	NCO module is disabled

Bit 5 – OUT NCO Output
Displays the current logic level of the NCO module output.

Bit 4 – POL NCO Polarity

Value	Description
1	NCO output signal is inverted
0	NCO output signal is not inverted

Bit 0 – PFM NCO Pulse Frequency Mode

Value	Description
1	NCO operates in Pulse Frequency mode. Output frequency is $F_{OVERFLOW}$.
0	NCO operates in Fixed Duty Cycle mode. Output frequency is $F_{OVERFLOW}$ divided by 2.

32.8.2 NCOxCLK

Name: NCOxCLK
Address: 0x0447

NCO Input Clock Control Register

Bit	7	6	5	4	3	2	1	0
	PWS[2:0]				CKS[3:0]			
Access	R/W	R/W	R/W		R/W	R/W	R/W	R/W
Reset	0	0	0		0	0	0	0

Bits 7:5 – PWS[2:0] NCO Output Pulse Width Select[(1)]

Value	Description
111	NCO output is active for 128 input clock periods
110	NCO output is active for 64 input clock periods
101	NCO output is active for 32 input clock periods
100	NCO output is active for 16 input clock periods
011	NCO output is active for 8 input clock periods
010	NCO output is active for 4 input clock periods
001	NCO output is active for 2 input clock periods
000	NCO output is active for 1 input clock periods

Bits 3:0 – CKS[3:0] NCO Clock Source Select

CKS Value	Clock Source NCO1	Active in sleep
1111 – 1110	Reserved	-
1101	CLC4_OUT	No
1100	CLC3_out	No
1011	CLC2_OUT	No
1010	CLC1_OUT	No
1001	TMR4_OUT	No
1000	TMR2_OUT	No
0111	CLKREF	No
0110	EXTOSC	Yes
0101	SOSC	Yes
0100	MFINTOSC	Yes
0011	MFINTOSC	Yes
0010	LFINTOSC	Yes
0001	HFINTOSC	Yes
0000	F_{OSC}	No

Note:

1. PWS applies only when operating in Pulse Frequency mode.

32.8.3 NCOxACC

Name: NCOxACC
Address: 0x0440

NCO Accumulator Register

Bit	23	22	21	20	19	18	17	16
					ACC[19:16]			
Access					R/W	R/W	R/W	R/W
Reset					0	0	0	0

Bit	15	14	13	12	11	10	9	8
	ACC[15:8]							
Access	R/W	R/W	R/W	R/W	R/W	R/W	R/W	R/W
Reset	0	0	0	0	0	0	0	0

Bit	7	6	5	4	3	2	1	0
	ACC[7:0]							
Access	R/W	R/W	R/W	R/W	R/W	R/W	R/W	R/W
Reset	0	0	0	0	0	0	0	0

Bits 19:0 – ACC[19:0] Accumulated sum of NCO additions

Notes:

1. The individual bytes in this multi-byte register can be accessed with the following register names:
   - NCOxACCU: Accesses the upper byte ACC[23:16]
   - NCOxACCH: Accesses the high byte ACC[15:8]
   - NCOxACCL: Accesses the low byte ACC[7:0]
2. The accumulator spans registers NCOxACCU:NCOxACCH:NCOxACCL. The 24 bits are reserved but not all are used. This register updates in real-time, asynchronously to the CPU; there is no provision to ensure atomic access to this 24-bit space using an 8-bit bus. Writing to this register while the module is operating will produce undefined results.

32.8.4 NCOxINC

Name: NCOxINC
Address: 0x0443

NCO Increment Register

Bit	23	22	21	20	19	18	17	16
					INC[19:16]			
Access					R/W	R/W	R/W	R/W
Reset					0	0	0	0

Bit	15	14	13	12	11	10	9	8
	INC[15:8]							
Access	R/W	R/W	R/W	R/W	R/W	R/W	R/W	R/W
Reset	0	0	0	0	0	0	0	0

Bit	7	6	5	4	3	2	1	0
	INC[7:0]							
Access	R/W	R/W	R/W	R/W	R/W	R/W	R/W	R/W
Reset	0	0	0	0	0	0	0	1

Bits 19:0 – INC[19:0] Value by which the NCOxACC is increased by each NCO clock

Notes:

1. The individual bytes in this multi-byte register can be accessed with the following register names:
   - NCOxINCU: Accesses the upper byte INC[19:16]
   - NCOxINCH: Accesses the high byte INC[15:8]
   - NCOxINCL: Accesses the low byte INC[7:0]
2. The logical increment spans NCOxINCU:NCOxINCH:NCOxINCL.
3. NCOxINC is double-buffered as INCBUF:
   - INCBUF is updated on the next falling edge of NCOxCLK after writing to NCOxINCL
   - NCOxINCU and NCOxINCH should be written prior to writing NCOxINCL

32.9 Register Summary - NCO

Address	Name	Bit Pos.	7	6	5	4	3	2	1	0
0x00 ... 0x043F	Reserved									
0x0440	NCO1ACC	7:0	ACC[7:0]							
		15:8	ACC[15:8]							
		23:16					ACC[19:16]			
0x0443	NCO1INC	7:0	INC[7:0]							
		15:8	INC[15:8]							
		23:16					INC[19:16]			
0x0446	NCO1CON	7:0	EN		OUT	POL				PFM
0x0447	NCO1CLK	7:0	PWS[2:0]				CKS[3:0]			

33. DSM - Data Signal Modulator Module

The Data Signal Modulator (DSM) is a peripheral that allows the user to mix a data stream, also known as a modulator signal, with a carrier signal to produce a modulated output. Both the carrier and the modulator signals are supplied to the DSM module either internally, from the output of a peripheral, or externally through an input pin. The modulated output signal is generated by performing a logical “AND” operation of both the carrier and modulator signals, and then provided to the DSM_out pin.

The carrier signal is comprised of two distinct and separate signals. A Carrier High (CARH) signal and a Carrier Low (CARL) signal. During the time in which the modulator (MOD) signal is in a Logic High state, the DSM mixes the CARH signal with the modulator signal. When the modulator signal is in a Logic Low state, the DSM mixes the CARL signal with the modulator signal.

Using this method, the DSM can generate the following types of key modulation schemes:

- Frequency Shift Keying (FSK)
- Phase-Shift Keying (PSK)
- ON-OFF Keying (OOK)

Additionally, the following features are provided within the DSM module:

- Carrier Synchronization
- Carrier Source Polarity Select
- Programmable Modulator Data
- Modulated Output Polarity Select
- Peripheral Module Disable, which provides the ability to place the DSM module in the lowest power consumption mode

The figure below shows a simplified block diagram of the data signal modulator peripheral.

Figure 33-1. Simplified Block Diagram of the Data Signal Modulator

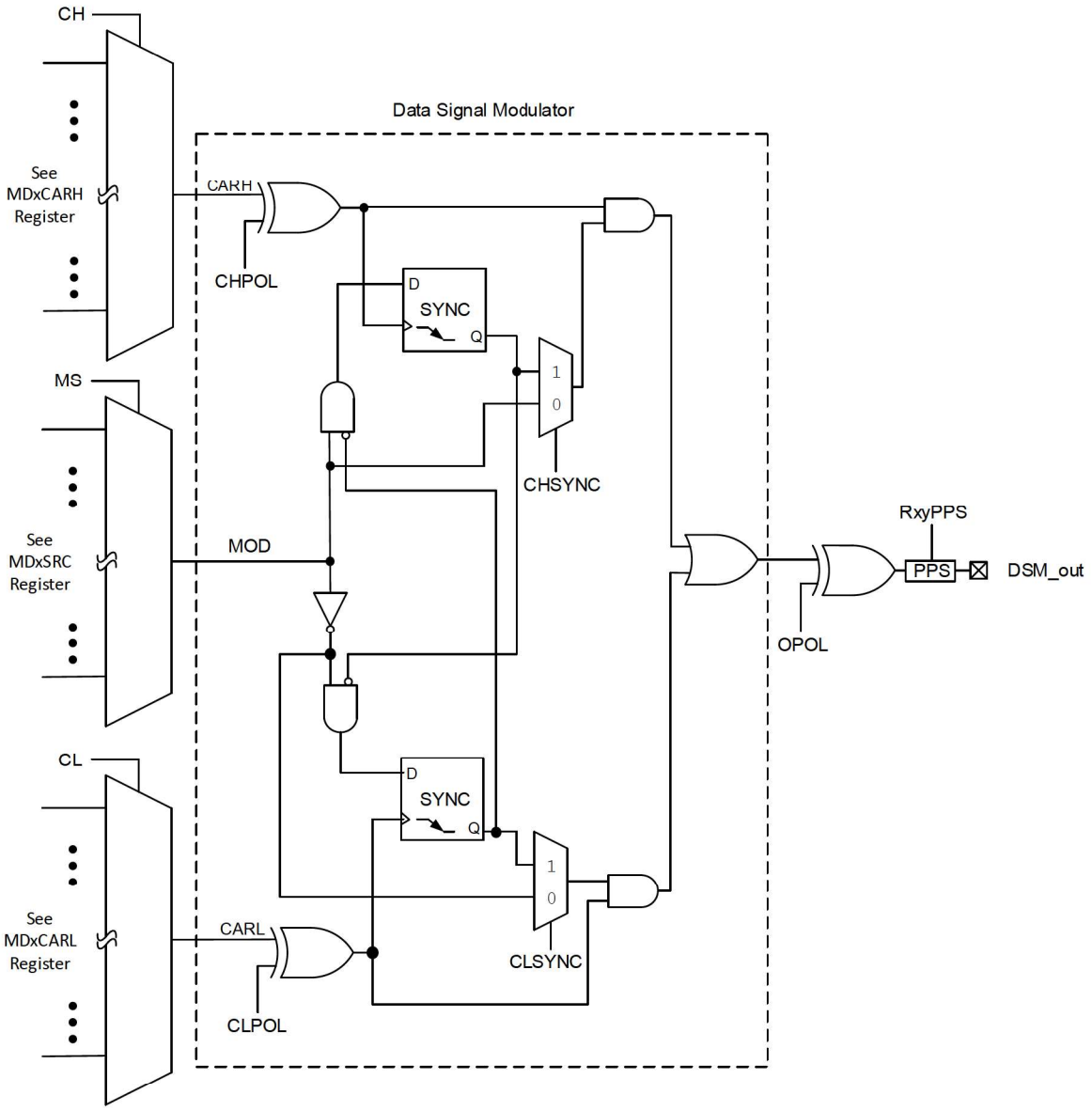

33.1 DSM Operation

The DSM module is enabled by setting the EN bit. Clearing the EN bit disables the output of the module, but retains the carrier and source signal selections. The module will resume operation when the EN bit is set again. The output of the DSM module can be rerouted to several pins using the PPS output source selection register. When the EN bit is cleared the output pin is held low.

33.1.1 Modulator Signal Sources

The modulator signal can be supplied from several different sources, and is selected by configuring the MS bits.

33.1.2 Carrier Signal Sources

The carrier high signal and carrier low signal can be supplied from several different sources, and is selected by the CH bits and CL bits, respectively.

33.2 Carrier Synchronization

During the time when the DSM switches between carrier high and carrier low signal sources, the carrier data in the modulated output signal can become truncated. To prevent this, the carrier signal can be synchronized to the modulator signal. When synchronization is enabled, the carrier pulse that is being mixed at the time of the transition is allowed to transition low before the DSM switches over to the next carrier source.

Synchronization is enabled separately for the carrier high and carrier low signal sources. Synchronization for the carrier high signal is enabled by setting the CHSYNC bit. Synchronization for the carrier low signal is enabled by setting the CLSYNC bit. The figures below show the timing diagrams of using various synchronization methods.

Figure 33-2. On-Off Keying (OOK) Synchronization

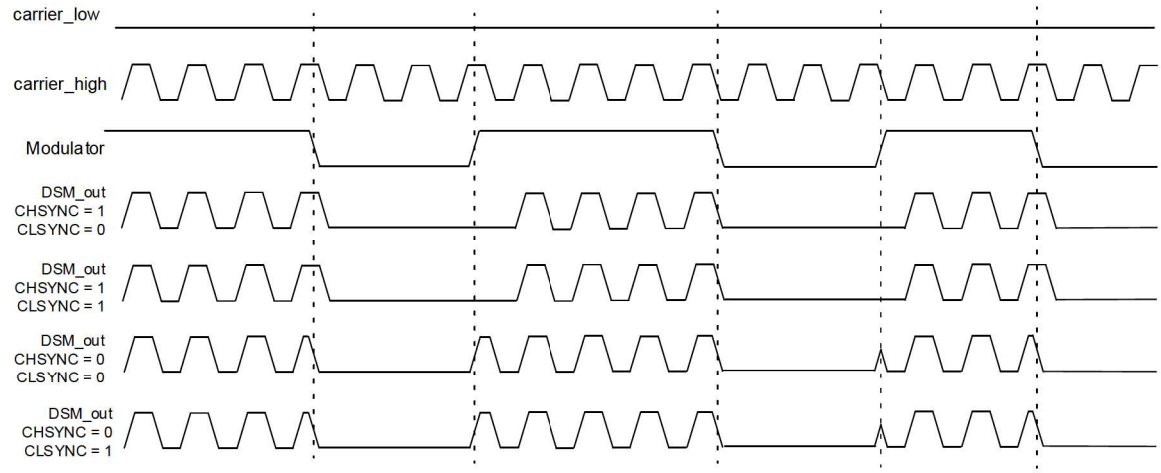

Figure 33-3. No Synchronization (CHSYNC = 0, CLSYNC = 0)

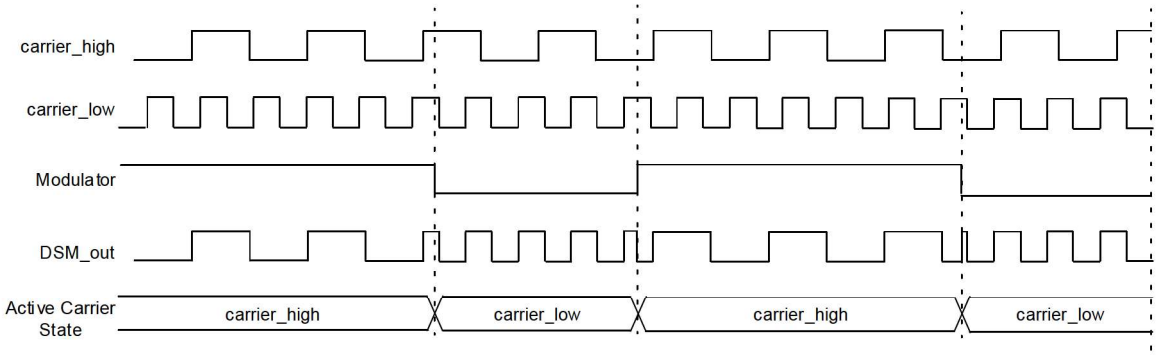

Figure 33-4. Carrier High Synchronization (CHSYNC = 1, CLSYNC = 0)

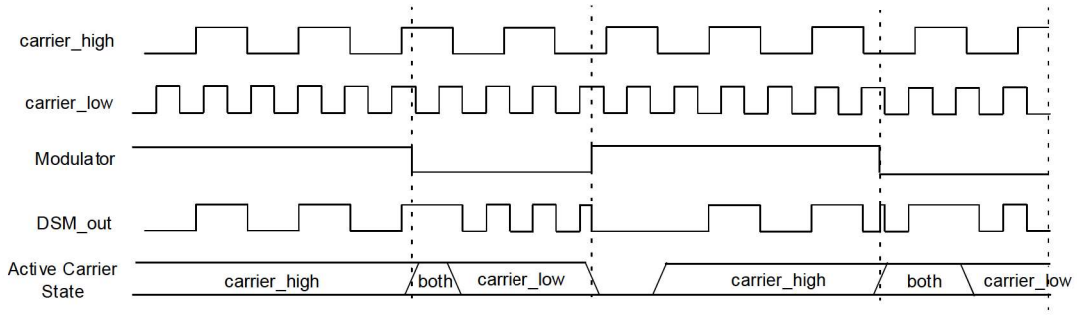

Figure 33-5. Carrier Low Synchronization (CHSYNC = 0, CLSYNC = 1)

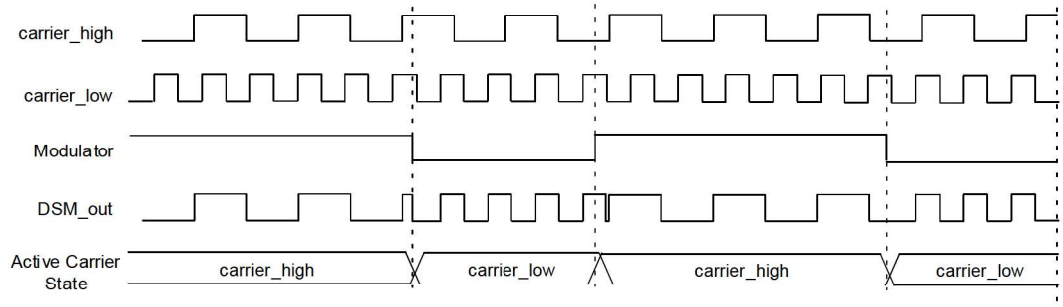

Figure 33-6. Full Synchronization (CHSYNC = 1, CLSYNC = 1)

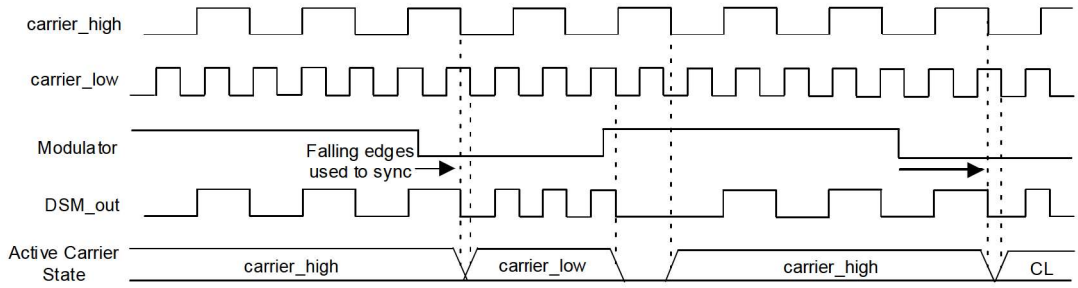

33.3 Carrier Source Polarity Select

The signal provided from any selected input source for the carrier high and carrier low signals can be inverted. Inverting the signal for the carrier high and low source is enabled by setting the CHPOL bit and the CLPOL bit, respectively.

33.4 Programmable Modulator Data

The BIT control bit can used to generate the modulation signal. This gives the user the ability to provide software driven modulation.

33.5 Modulated Output Polarity

The modulated output signal provided on the DSM_out pin can also be inverted. Inverting the modulated output signal is enabled by setting the OPOL bit.

33.6 Operation in Sleep Mode

The DSM can operate during Sleep, if the carrier and modulator input sources are also operable during Sleep. Refer to **"Power-Saving Modes"** chapter for more details.

33.7 Effects of a Reset

Upon any device Reset, the DSM module is disabled. The user's firmware is responsible for initializing the module before enabling the output. All the registers are reset to their default values.

33.8 Peripheral Module Disable

The DSM module can be completely disabled using the PMD module to achieve maximum power saving. When the DSMMD bit of the PMD registers is set, the DSM module is completely disabled. This puts the module in its lowest power consumption state. When enabled again all the registers of the DSM module default to POR status.

33.9 Register Definitions: Modulation Control

Long bit name prefixes for the modulation control peripherals are shown in the table below. Refer to the **"Long Bit Names"** section in the **"Register and Bit Naming Conventions"** chapter for more information.

Table 33-1. Modulation Control Long Bit Name Prefixes

Peripheral	Bit Name Prefix
DSM1	MD1

33.9.1 MDxCON0

Name: MDxCON0
Address: 0x6A

Modulation Control Register 0

Bit	7	6	5	4	3	2	1	0
	EN		OUT	OPOL				BIT
Access	R/W		R/W	R/W				R/W
Reset	0		0	0				0

Bit 7 – EN Modulator Module Enable

Value	Description
1	DSM is enabled and mixing input signals
0	DSM is disabled and has no output

Bit 5 – OUT Modulator Output(1)
Displays the current DSM_out value

Bit 4 – OPOL Modulator Output Polarity Select

Value	Description
1	DSM output signal is inverted; idle high output
0	DSM output signal is not inverted; idle low output

Bit 0 – BIT Modulation Source Signal(2)
Allows direct software control of the modulation signal

Notes:

1. The modulated output frequency can be greater and asynchronous from the clock that updates this register bit. The bit value may not be valid for higher speed modulator or carrier signals.
2. MDBIT must be selected as the modulation source in the MDxSRC register for this operation.

33.9.2 MDxCON1

Name: MDxCON1
Address: 0x6B

Modulation Control Register 1

Bit	7	6	5	4	3	2	1	0
			CHPOL	CHSYNC			CLPOL	CLSYNC
Access			R/W	R/W			R/W	R/W
Reset			0	0			0	0

Bit 5 – CHPOL Modulator High Carrier Polarity Select

Value	Description
1	Selected high carrier signal is inverted
0	Selected high carrier signal is not inverted

Bit 4 – CHSYNC Modulator High Carrier Synchronization Enable

Value	Description
1	Modulator waits for a falling edge on the high time carrier signal before allowing a switch to the low time carrier
0	Modulator output is not synchronized to the high time carrier signal(1)

Bit 1 – CLPOL Modulator Low Carrier Polarity Select

Value	Description
1	Selected low carrier signal is inverted
0	Selected low carrier signal is not inverted

Bit 0 – CLSYNC Modulator Low Carrier Synchronization Enable

Value	Description
1	Modulator waits for a falling edge on the low time carrier signal before allowing a switch to the high time carrier
0	Modulator output is not synchronized to the low time carrier signal(1)

Note:

1. Narrowed carrier pulse widths or spurs may occur in the signal stream if the carrier is not synchronized.

33.9.3 MDxCARH

Name: MDxCARH
Address: 0x6E

Modulation High Carrier Control Register

Bit	7	6	5	4	3	2	1	0
					CH[3:0]			
Access					R/W	R/W	R/W	R/W
Reset					0	0	0	0

Bits 3:0 – CH[3:0] Modulator Carrier High Selection

CH	Connection
1111	Reserved
1110	Reserved
1101	CLC4_OUT
1100	CLC3_OUT
1011	CLC2_OUT
1010	CLC1_OUT
1001	NCO1_OUT
1000	PWM3S1P1_OUT
0111	PWM2S1P1_OUT
0110	PWM1S1P1_OUT
0101	CCP1_OUT
0100	CLKREF_OUT
0011	EXTOSC
0010	HFINTOSC
0001	F_{OSC} (System Clock)
0000	Pin selected by MDCARHPPS

33.9.4 MDxCARL

Name: MDxCARL
Address: 0x6D

Modulation Low Carrier Control Register

Bit	7	6	5	4	3	2	1	0
					CL[3:0]			
Access					R/W	R/W	R/W	R/W
Reset					0	0	0	0

Bits 3:0 – CL[3:0] Modulator Carrier Low Input Selection

CL	Connection
1111	Reserved
1110	Reserved
1101	CLC4_OUT
1100	CLC3_OUT
1011	CLC2_OUT
1010	CLC1_OUT
1001	NCO1_OUT
1000	PWM3S1P2_OUT
0111	PWM2S1P2_OUT
0110	PWM1S1P2_OUT
0101	CCP1_OUT
0100	CLKREF_OUT
0011	EXTOSC
0010	HFINTOSC
0001	F_{OSC} (System Clock)
0000	Pin selected by MDCARLPPS

33.9.5 MDxSRC

Name: MDxSRC
Address: 0x6C

Modulation Source Control Register

Bit	7	6	5	4	3	2	1	0
				MS[4:0]				
Access				R/W	R/W	R/W	R/W	R/W
Reset				0	0	0	0	0

Bits 4:0 – MS[4:0] Modulator Source Selection

MS	Connection
10101 - 11111	Reserved
10100	SPI2_SDO
10011	SPI1_SDO
10010	UART3_TX
10001	UART2_TX
10000	UART1_TX
01111	CLC4_OUT
01110	CLC3_OUT
01101	CLC2_OUT
01100	CLC1_OUT
01011	CMP2_OUT
01010	CMP1_OUT
01001	NCO1_OUT
01000	PWM3S1P2_OUT
00111	PWM3S1P1_OUT
00110	PWM2S1P2_OUT
00101	PWM2S1P1_OUT
00100	PWM1S1P2_OUT
00011	PWM1S1P1_OUT
00010	CCP1_OUT
00001	MDBIT
00000	Pin selected by MDSRCPPS

33.10 Register Summary - DSM

Address	Name	Bit Pos.	7	6	5	4	3	2	1	0
0x00 ... 0x69	Reserved									
0x6A	MD1CON0	7:0	EN		OUT	OPOL				BIT
0x6B	MD1CON1	7:0			CHPOL	CHSYNC			CLPOL	CLSYNC
0x6C	MD1SRC	7:0				MS[4:0]				
0x6D	MD1CARL	7:0					CL[3:0]			
0x6E	MD1CARH	7:0					CH[3:0]			

34. UART - Universal Asynchronous Receiver Transmitter with Protocol Support

The Universal Asynchronous Receiver Transmitter (UART) module is a serial I/O communications peripheral. It contains all the clock generators, shift registers and data buffers necessary to perform an input or output serial data transfer, independent of device program execution. The UART, also known as a Serial Communications Interface (SCI), can be configured as a full-duplex asynchronous system or one of several automated protocols. The Full-Duplex mode is useful for communications with peripheral systems, such as wireless modems and USB to serial interface modules.

Supported protocols include:

- LIN Master and Slave
- DMX Controller and Receiver
- DALI Control Gear and Control Device

The UART module includes the following capabilities:

- Half and Full-duplex asynchronous transmit and receive
- Two-byte input buffer
- One-byte output buffer
- Programmable 7-bit or 8-bit byte width
- 9th bit address detection
- 9th bit even or odd parity
- Input buffer overrun error detection
- Receive framing error detection
- Hardware and software flow control
- Automatic checksum calculation and verification
- Programmable 1, 1.5, and 2 Stop bits
- Programmable data polarity
- Manchester encoder/decoder
- Operation in Sleep
- Automatic detection and calibration of the baud rate
- Wake-up on Break reception
- Automatic and user timed Break period generation
- RX and TX inactivity time-outs (with Timer2)

The operation of the UART module is controlled through nineteen 8-bit registers:

- Three control registers (UxCON0-UxCON2)
- Error enable and status (UxERRIE, UxERRIR, UxUIR)
- UART buffer status and control (UxFIFO)
- Three 9-bit protocol parameters (UxP1-UxP3)
- 16-bit Baud Rate Generator (UxBRG)
- Transmit buffer write (UxTXB)
- Receive buffer read (UxRXB)
- Receive checksum (UxRXCHK)
- Transmit checksum (UxTXCHK)

The UART transmit output (TX_out) is available to the TX pin and internally to various peripherals.

Block diagrams of the UART transmitter and receiver are shown in the following figures.

Figure 34-1. UART Transmitter Block Diagram

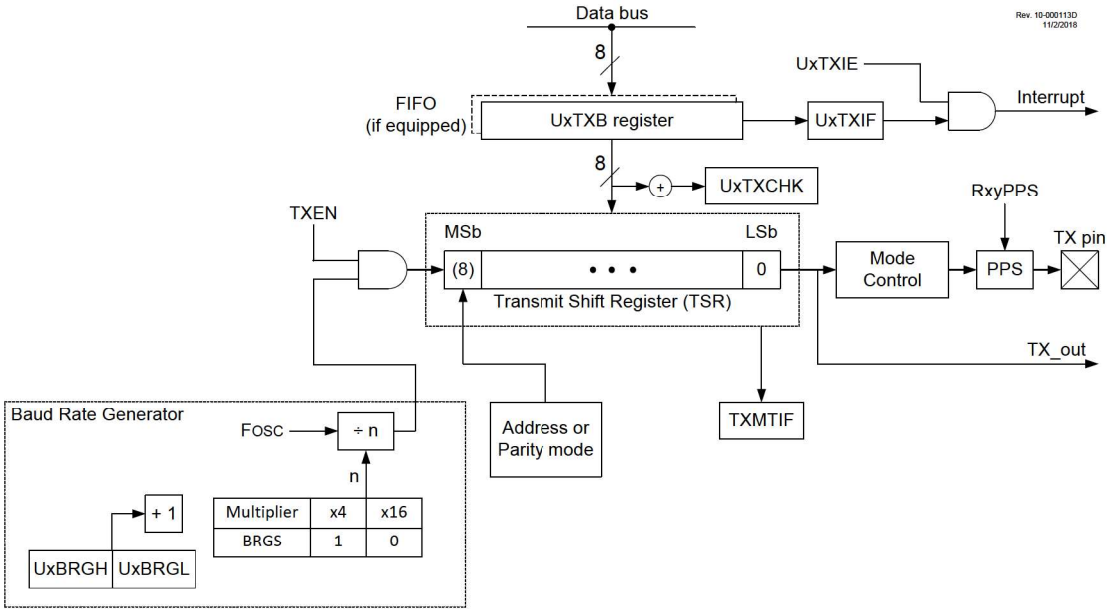

Figure 34-2. UART Receiver Block Diagram

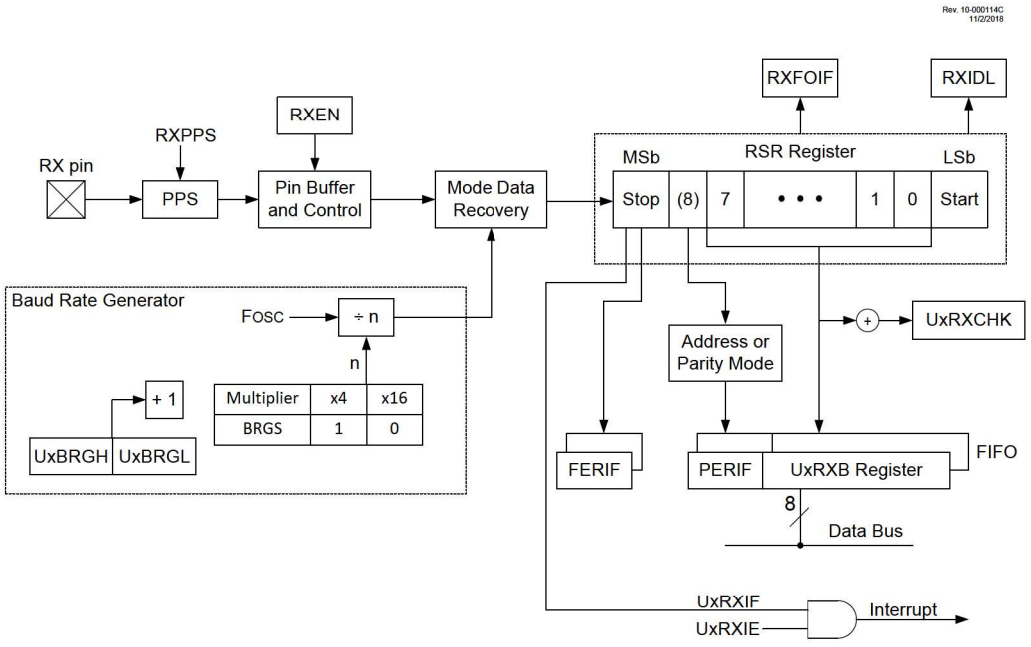

34.1 UART I/O Pin Configuration

The RX input pin is selected with the UxRPPS register. The TX output pin is selected with each pin's RxyPPS register. When the TRIS control for the pin corresponding to the TX output is cleared, the UART will control the logic level on the TX pin. Changing the TXPOL bit in UxCON2 will immediately change the TX pin logic level, regardless of the value of EN or TXEN.

34.2 UART Asynchronous Modes

The UART has five asynchronous modes:

- 7-bit
- 8-bit
- 8-bit with even parity in the 9th bit
- 8-bit with odd parity in the 9th bit
- 8-bit with address indicator in the 9th bit

The UART transmits and receives data using the standard Non-Return-to-Zero (NRZ) format. NRZ is implemented with two levels: a VOH Mark state, which represents a '1' data bit, and a VOL Space state, which represents a '0' data bit. NRZ implies that consecutively transmitted data bits of the same value stay at the output level of that bit without returning to a neutral level between each bit transmission. An NRZ transmission port idles in the Mark state. Each character transmission consists of one Start bit followed by seven or eight data bits, one optional parity or address bit, and is always terminated by one or more Stop bits. The Start bit is always a space and the Stop bits are always marks. The most common data format is eight bits with no parity. Each transmitted bit persists for a period of 1/ (Baud Rate). An on-chip dedicated 16-bit Baud Rate Generator is used to derive standard baud rate frequencies from the system oscillator. See UART Baud Rate Generator for more information.

In all asynchronous modes, the UART transmits and receives the LSb first. The UART's transmitter and receiver are functionally independent, but share the same data format and baud rate. Parity is supported by the hardware with even and odd parity modes.

34.2.1 UART Asynchronous Transmitter

The UART transmitter block diagram is shown in Figure 34-1. The heart of the transmitter is the serial Transmit Shift Register (TSR), which is not directly accessible by software. The TSR obtains its data from the transmit buffer, which is the UxTXB register.

34.2.1.1 Enabling the Transmitter

The UART transmitter is enabled for asynchronous operations by configuring the following control bits:

- TXEN = 1
- MODE = 0000 through 0011
- UxBRG = desired baud rate
- BRGS = desired baud rate multiplier
- RxyPPS = code for desired output pin
- ON = 1

All other UART control bits are assumed to be in their default state.

Setting the TXEN bit enables the transmitter circuitry of the UART. The MODE bits select the desired mode. Setting the ON bit enables the UART. When TXEN is set and the transmitter is not Idle, the TX pin is automatically configured as an output. When the transmitter is Idle, the TX pin drive is relinquished to the port TRIS control. If the TX pin is shared with an analog peripheral, the analog I/O function should be disabled by clearing the corresponding ANSEL bit.

Important: The UxTXIF Transmitter Interrupt flag is set when the TXEN Enable bit is set and the UxTXB register can accept data.

34.2.1.2 Transmitting Data

A transmission is initiated by writing a character to the UxTXB register. If this is the first character, or the previous character has been completely transmitted from the TSR, the data in the UxTXB is immediately transferred to the TSR register. If the TSR still contains all or part of a previous character, the new character data is held in the UxTXB until the previous character transmission is complete. The pending character in the UxTXB is then transferred to the

TSR at the beginning of the previous character Stop bit transmission. The transmission of the Start bit, data bits and Stop bit sequence commences immediately following the completion of all of the previous character's Stop bits.

34.2.1.3 Transmit Data Polarity

The polarity of the transmit data is controlled with the TXPOL bit. The default state of this bit is '0' which selects high true transmit idle and data bits. Setting the TXPOL bit to '1' will invert the transmit data, resulting in low true idle and data bits. The TXPOL bit controls transmit data polarity in all modes.

34.2.1.4 Transmit Interrupt Flag

The UxTXIF Interrupt Flag bit in the PIR register is set whenever the UART transmitter is enabled and no character is being held for transmission in the UxTXB register. In other words, the UxTXIF bit is clear only when the TSR is busy with a character and a new character has been queued for transmission in the UxTXB register.

The UxTXIF interrupt is enabled by setting the UxTXIE Interrupt Enable bit in the PIE register. However, the UxTXIF Flag bit will be set whenever the UxTXB register is empty, regardless of the state of the UxTXIE Enable bit. The UxTXIF bit is read-only and cannot be set or cleared by software.

To use interrupts when transmitting data, set the UxTXIE bit only when there is more data to send. Clear the UxTXIE Interrupt Enable bit upon writing the UxTXB register with the last character of the transmission.

34.2.1.5 TSR Status

The TXMTIF bit indicates the status of the TSR. This is a read-only bit. The TXMTIF bit is set when the TSR is empty and idle. The TXMTIF bit is cleared when a character is transferred to the TSR from the UxTXB. The TXMTIF bit remains clear until all bits, including the Stop bits, have been shifted out of the TSR and a byte is not waiting in the UxTXB register.

The TXMTIF will generate a summary UxEIF interrupt when the TXMTIE bit is set.

Important: The TSR is not mapped in data memory, so it is not available to the user.

34.2.1.6 Transmitter 7-bit Mode

The 7-Bit mode is selected when the MODE bits are set to '0001'. In 7-bit mode, only the seven Least Significant bits of the data written to UxTXB are transmitted. The Most Significant bit is ignored.

34.2.1.7 Transmitter Parity Modes

When odd or even parity mode is selected, all data is sent as nine bits. The first eight bits are data and the 9th bit is parity. Even and odd parity is selected when the MODE bits are set to '0011' and '0010', respectively. Parity is automatically determined by the module and inserted in the serial data stream.

34.2.1.8 Asynchronous Transmission Setup

Use the following steps as a guide for configuring the UART for asynchronous transmissions.

1. Initialize the UxBRG register pair and the BRGS bit to achieve the desired baud rate.
2. Set the MODE bits to the desired asynchronous mode.
3. Set the TXPOL bit if inverted TX output is desired.
4. Enable the asynchronous serial port by setting the ON bit.
5. Enable the transmitter by setting the TXEN Control bit. This will cause the UxTXIF Interrupt flag to be set.
6. If the device has PPS, configure the desired I/O pin RxyPPS register with the code for the TX output.
7. If interrupts are desired, set the UxTXIE Interrupt Enable bit in the respective PIE register. An interrupt will occur immediately provided that global interrupts are also enabled.
8. Write one byte of data into the UxTXB register. This will start the transmission.
9. Subsequent bytes may be written when the UxTXIF bit is '1'.

Figure 34-3. UART Asynchronous Transmission

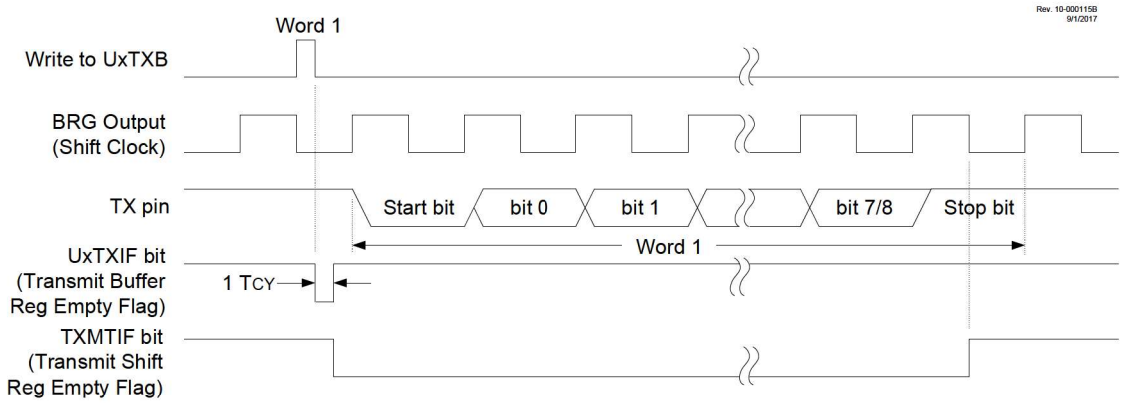

Figure 34-4. UART Asynchronous Transmission (back-to-back)

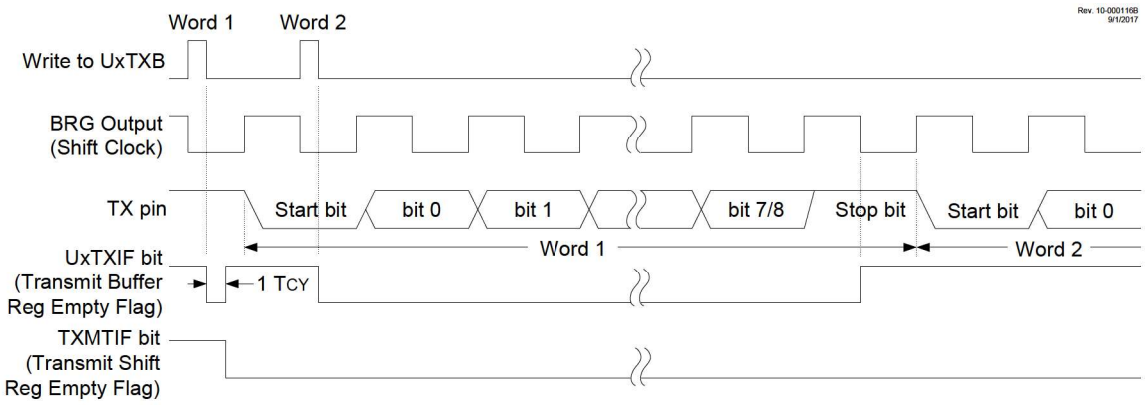

34.2.2 UART Asynchronous Receiver

The Asynchronous mode is typically used in RS-232 systems. The receiver block diagram is shown in Figure 34-2. The data is received on the RX pin and drives the data recovery block. The data recovery block is actually a high-speed shifter operating at 4 or 16 times the baud rate, whereas the serial Receive Shift Register (RSR) operates at the bit rate. When all bits of the character have been shifted in, they are immediately transferred to a two-character First-In First-Out (FIFO) memory. The FIFO buffering allows reception of two complete characters and the start of a third character before software must begin servicing the UART receiver. The FIFO registers and RSR are not directly accessible by software. Access to the received data is made via the UxRXB register.

34.2.2.1 Enabling the Receiver

The UART receiver is enabled for asynchronous operation by configuring the following control bits:

- RXEN = 1
- MODE = 0000 through 0011
- UxBRG = desired baud rate
- BRGS = desired baud rate multiplier
- RXPPS = code for desired input pin
- Input pin ANSEL bit = 0
- ON = 1

All other UART control bits are assumed to be in their default state.

Setting the RXEN bit enables the receiver circuitry of the UART. Setting the MODE bits configures the UART for the desired Asynchronous mode. Setting the ON bit enables the UART. The TRIS bit corresponding to the selected RX I/O pin must be set to configure the pin as an input.

Important: If the RX function is on an analog pin, the corresponding ANSEL bit must be cleared for the receiver to function.

34.2.2.2 Receiving Data

Data is recovered from the bit stream by timing to the center of the bits and sampling the input level. In High-Speed mode, there are four BRG clocks per bit and only one sample is taken per bit. In Normal-Speed mode, there are 16 BRG clocks per bit and three samples are taken per bit.

The receiver data recovery circuit initiates character reception on the falling edge of the Start bit. The Start bit is always a '0'. The Start bit is qualified in the middle of the bit. In Normal-Speed mode only, the Start bit is also qualified at the leading edge of the bit. The following paragraphs describe the majority-detect sampling of the Normal-Speed mode without inverted polarity.

The falling edge starts the Baud Rate Generator (BRG) clock. The input is sampled at the first and second BRG clocks.

If both samples are high, then the falling edge is deemed a glitch and the UART returns to the Start bit detection state without generating an error.

If either sample is low, the data recovery circuit continues counting BRG clocks and takes samples at clock counts: 7, 8, and 9. When less than two samples are low, the Start bit is deemed invalid and the data recovery circuit aborts character reception, without generating an error, and resumes looking for the falling edge of the Start bit.

When two or more samples are low, the Start bit is deemed valid and the data recovery continues. After a valid Start bit is detected, the BRG clock counter continues and resets at count 16. This is the beginning of the first data bit.

The data recovery circuit counts the BRG clocks from the beginning of the bit and takes samples at clocks 7, 8, and 9. The bit value is determined from the majority of the samples. The resulting '0' or '1' is shifted into the RSR. The BRG clock counter continues and resets at count 16. This sequence repeats until all data bits have been sampled and shifted into the RSR.

After all data bits have been shifted in, the first Stop bit is sampled. Stop bits are always a '1'. If the bit sampling determines that a '0' is in the Stop bit position, the framing error is set for this character. Otherwise, the framing error is cleared for this character. See Receive Framing Error for more information on framing errors.

34.2.2.3 Receive Data Polarity

The polarity of the receive data is controlled with the RXPOL bit. The default state of this bit is '0' which selects high true receive idle and data bits. Setting the RXPOL bit to '1' will invert the receive data, resulting in low true idle and data bits. The RXPOL bit controls receive data polarity in all modes.

34.2.2.4 Receive Interrupts

Immediately after all data bits and the Stop bit have been received, the character in the RSR is transferred to the UART receive FIFO. The UxRXIF Interrupt flag in the respective PIR register is set at this time, provided it is not being suppressed.

The UxRXIF is suppressed by any of the following:

- FERIF when FERIE is set
- PERIF when PERIE is set

When the UART uses DMA for reception, suppressing the UxRXIF suspends the DMA transfer of data until software processes the error and reads UxRXB to advance the FIFO beyond the error.

The UxRXIF interrupts are enabled by setting all of the following bits:

- UxRXIE, Interrupt Enable bit in the PIE register
- Global Interrupt Enable bits

The UxRXIF Interrupt Flag bit will be set when it is not suppressed and there is an unread character in the FIFO, regardless of the state of interrupt enable bits. Reading the UxRXB register will transfer the top character out of the FIFO and reduce the FIFO contents by one. The UxRXIF Interrupt Flag bit is read-only and therefore cannot be set or cleared by software.

34.2.2.5 Receive Framing Error

Each character in the receive FIFO buffer has a corresponding framing error flag bit. A framing error indicates that the Stop bit was not seen at the expected time. For example, a Break condition will be received as a 0x00 byte with the framing error bit set.

The framing error flag is accessed via the FERIF bit. The FERIF bit represents the frame status of the top unread character of the receive FIFO. Therefore, the FERIF bit must be read before reading UxRXB.

The FERIF bit is read-only and only applies to the top unread character of the receive FIFO. A framing error (FERIF = 1) does not preclude reception of additional characters. It is neither necessary nor possible to clear the FERIF bit directly. Reading the next character from the FIFO buffer will advance the FIFO to the next character and the next corresponding framing error, if any.

The FERIF bit is cleared when the character at the top of the FIFO does not have a framing error or when all bytes in the receive FIFO have been read. Clearing the ON bit resets the receive FIFO, thereby also clearing the FERIF bit.

A framing error will generate a summary UxEIF interrupt when the FERIE bit is set. The summary error is reset when the FERIF bit of the top of the FIFO is '0' or when all FIFO characters have been retrieved.

Important: When FERIE is set, UxRXIF interrupts are suppressed by FERIF = 1.

34.2.2.6 Receiver Parity Modes

Even or odd parity is automatically detected when the MODE bits are set to '0011' or '0010', respectively. The parity modes receive eight data bits and one parity bit for a total of nine bits for each character. The PERIF bit represents the parity error of the top unread character of the receive FIFO rather than the parity bit itself. The parity error must be read before the UxRXB register is read because reading the UxRXB register will advance the FIFO pointer to the next byte with its associated PERIF flag.

A parity error will generate a summary UxEIF interrupt when the PERIE bit is set. The summary error is reset when the PERIF bit of the top of the FIFO is '0' or when all FIFO characters have been retrieved.

Important: When PERIE is set, the UxRXIF interrupts are suppressed by PERIF = 1.

34.2.2.7 Receive FIFO Overflow

When more characters are received than the receive FIFO can hold, the RXFOIF bit is set. The character causing the Overflow condition is discarded. The RUNOVF bit determines how the receive circuit responds to characters while the Overflow condition persists. When RUNOVF is set, the receive shifter stays synchronized to the incoming data stream by responding to Start, data, and Stop bits. However, all received bytes not already in the FIFO are discarded. When RUNOVF is cleared, the receive shifter ceases operation and Start, data, and Stop bits are ignored. The Receive Overflow condition is cleared by reading the UxRXB register and clearing the RXFOIF bit. If the UxRXB register is not read, thereby opening a space in the FIFO, the next character received will be discarded and cause another Overflow condition.

A receive overflow error will generate a summary UxEIF interrupt when the RXFOIE bit is set.

34.2.2.8 Asynchronous Reception Setup

Use the following steps as a guide for configuring the UART for asynchronous reception:

1. Initialize the UxBRG register pair and the BRGS bit to achieve the desired baud rate.

2. Configure the RXPPS register for the desired RX pin.
3. Clear the ANSEL bit for the RX pin (if applicable).
4. Set the MODE bits to the desired Asynchronous mode.
5. Set the RXPOL bit if the data stream is inverted.
6. Enable the serial port by setting the ON bit.
7. If interrupts are desired, set the UxRXIE bit in the PIEx register and enable global interrupts.
8. Enable reception by setting the RXEN bit.
9. Read the UxERRIR register to get the error flags.
10. The UxRXIF Interrupt Flag bit will be set when a character is transferred from the RSR to the receive buffer. An interrupt will be generated if the UxRXIE interrupt enable bit is also set.
11. Read the UxRXB register to get the received byte.
12. If an overrun occurred, clear the RXFOIF bit.

Figure 34-5. UART Asynchronous Reception

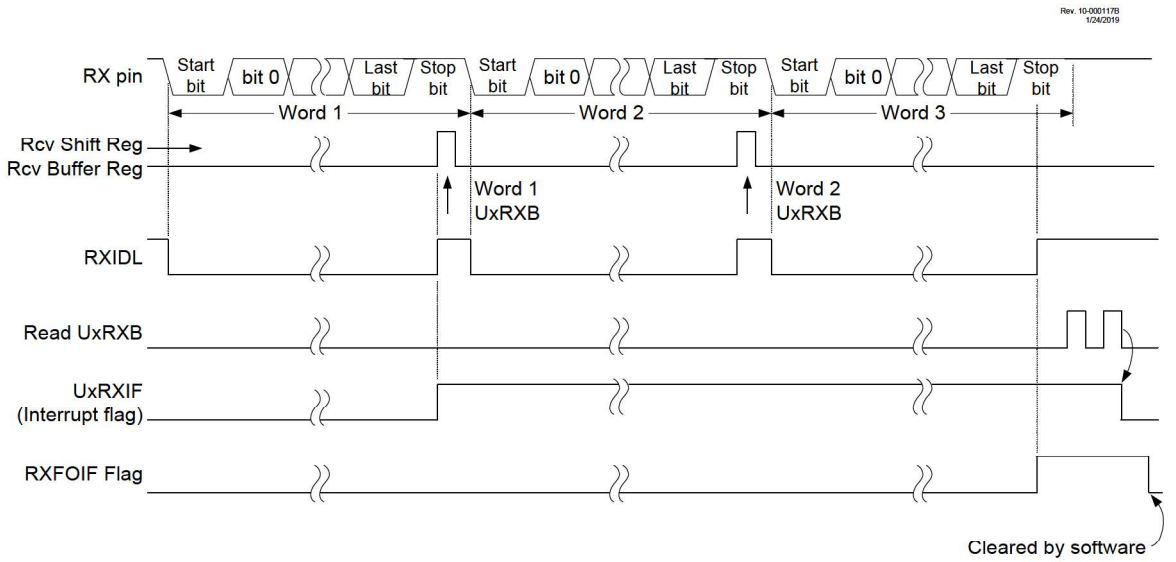

Note: This timing diagram shows three bytes appearing on the RX input. The UxRXB is not read before the third word is received, causing the RXFOIF (FIFO overrun) bit to be set. STPMD = 0, STP=00.

34.2.3 Asynchronous Address Mode

A special Address Detection mode is available for use when multiple receivers share the same transmission line, as seen in RS-485 systems.

When Asynchronous Address mode is enabled, all data is transmitted and received as 9-bit characters. The 9th bit determines whether the character is address or data. When the 9th bit is set, the eight Least Significant bits are the address. When the 9th bit is clear, the Least Significant bits are data. In either case, the 9th bit is stored in PERIF when the byte is written to the receive FIFO. When PERIE is also set, the RXIF will be suppressed, thereby suspending DMA transfers allowing software to process the received address.

An address character will enable all receivers that match the address and disable all other receivers. Once a receiver is enabled, all non-address characters will be received until an address character that does not match is received.

34.2.3.1 Address Mode Transmit

The UART transmitter is enabled for asynchronous address operation by configuring the following control bits:

- TXEN = 1
- MODE = 0100
- UxBRG = desired baud rate

- BRGS = desired baud rate multiplier
- RxyPPS = code for desired output pin
- ON = 1

Addresses are sent by writing to the UxP1L register. This transmits the written byte with the 9th bit set, which indicates that the byte is an address.

Data is sent by writing to the UxTXB register. This transmits the written byte with the 9th bit cleared, which indicates that the byte is data.

To send data to a particular device on the transmission bus, first transmit the address of the intended device. All subsequent data will be accepted only by that device until an address of another device is transmitted.

Writes to UxP1L take precedence over writes to UxTXB. When both the UxP1L and UxTXB registers are written while the TSR is busy, the next byte to be transmitted will be from UxP1L.

To ensure all data intended for one device are sent before the address is changed, wait until the TXMTIF bit is high before writing UxP1L with the new address.

34.2.3.2 Address Mode Receive

The UART receiver is enabled for asynchronous address operation by configuring the following control bits:

- RXEN = 1
- MODE = 0100
- UxBRG = desired baud rate
- BRGS = desired baud rate multiplier
- RXPPS = code for desired input pin
- Input pin ANSEL bit = 0
- UxP2L = receiver address
- UxP3L = address mask
- ON = 1

In Address mode, no data will be transferred to the input FIFO until a valid address is received. This is the default state. Any of the following conditions will cause the UART to revert to the default state:

- ON = 0
- RXEN = 0
- Received address does not match

When a character with the 9th bit set is received, the Least Significant eight bits of that character will be qualified by the values in the UxP2L and UxP3L registers.

The byte is XORed with UxP2L then ANDed with UxP3L. A match occurs when the result is 0h, in which case, the unaltered received character is stored in the receive FIFO, thereby setting the UxRXIF Interrupt bit. The 9th bit is stored in the corresponding PERIF bit, identifying this byte as an address.

An address match also enables the receiver for all data such that all subsequent characters without the 9th bit set will be stored in the receive FIFO.

When the 9th bit is set and a match does not occur, the character is not stored in the receive FIFO and all subsequent data is ignored.

The UxP3L register mask allows a range of addresses to be accepted. Software can then determine the sub-address of the range by processing the received address character.

34.3 DMX Mode (Full-featured UARTs only)

DMX is a protocol used in stage and show equipment. This includes lighting, fog machines, motors, etc. The protocol consists of a Controller that sends out commands, and receiver such as theater lights that receive these commands. The DMX protocol is usually unidirectional, but can be a bidirectional protocol in either Half or Full-Duplex modes. An example of a Half-Duplex mode is the RDM (Remote Device Management) protocol that sits on DMX512A. The

Controller transmits commands and the receiver receives them. There are no error conditions or re-transmit mechanisms.

DMX, or DMX512A as it is known, consists of a “Universe” of 512 channels. This means that one Controller can output up to 512 bytes on a single DMX link. Each piece of equipment on the line is programmed to listen to a consecutive sequence of one or more of these bytes.

For example, a fog machine connected to one of the universes may be programmed to receive one byte, starting at byte number 10, and a lighting unit may be programmed to receive four bytes starting at byte number 22.

34.3.1 DMX Controller

The DMX Controller mode is configured with the following settings:

- MODE = 1010
- TXEN = 1
- RXEN = 0
- TXPOL = 0
- UxP1 = One less than the number of bytes to transmit (excluding the Start code)
- UxBRG = Value to achieve 250K baud rate
- STP = 10 for two Stop bits
- RxyPPS = TX pin output code
- ON = 1

Each DMX transmission begins with a Break followed by a byte called the “Start Code”. The width of the Break is fixed at 25 bit times. The Break is followed by a “Mark After Break” (MAB) Idle period. After this Idle period, the 1st through ‘n’th byte is transmitted, where ‘n-1’ is the value in UxP1. See the following figure.

Figure 34-6. DMX Transmit Sequence

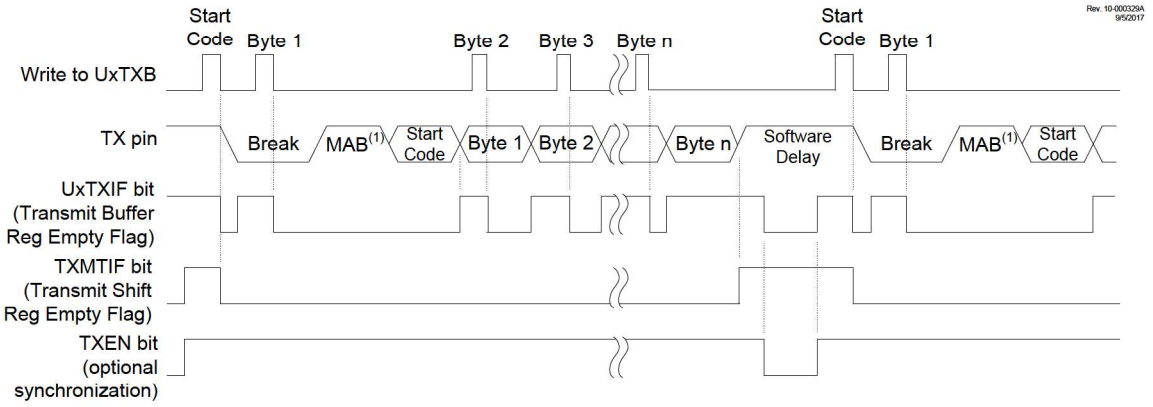

Note 1: The MAB period is fixed at 3 bit times

Software sends the Start Code and the ‘n’ data bytes by writing the UxTXB register with each byte to be sent in the desired order. A UxTXIF value of ‘1’ indicates when the UxTXB is ready to accept the next byte.

The internal byte counter is not accessible to software. Software needs to keep track of the number of bytes written to UxTXB to ensure that no more and no less than ‘n’ bytes are sent because the DMX state machine will automatically insert a Break and reset its internal counter after ‘n’ bytes are written. One way to ensure synchronization between hardware and software is to toggle TXEN after the last byte of the universe is completely free of the transmit shift register, as indicated by the TXMTIF bit.

34.3.2 DMX Receiver

The DMX Receiver mode is configured with the following settings:

- MODE = 1010

- TXEN = 0
- RXEN = 1
- RXPOL = 0
- UxP2 = number of first byte to receive
- UxP3 = number of last byte to receive
- UxBRG = Value to achieve 250K baud rate
- STP = 10 for two Stop bits
- ON = 1
- UxRXPPS = code for desired input pin
- Input pin ANSEL bit = 0

When configured as a DMX Receiver, the UART listens for a Break character that is at least 23 bit periods wide. If the Break is shorter than 23 bit times, the Break is ignored and the DMX state machine remains in Idle mode. Upon receiving the Break, the DMX counters will be reset to align with the incoming data stream. Immediately after the Break, the UART will see the “Mark after Break” (MAB). This space is ignored by the UART. The Start Code follows the MAB and will always be stored in the receive FIFO.

After the Start Code, the 1st through 512th byte will be received, but not all of them are stored in the receive FIFO. The UART ignores all received bytes until the ones of interest are received. This is done using the UxP2 and UxP3 registers. The UxP2 register holds the value of the byte number to start the receive process. The byte counter starts at ‘0’ for the first byte after the Start Code. For example, to receive four bytes starting at the 10th byte after the Start Code, write 009h (9 decimal) to UxP2H:L and 00Ch (12 decimal) to UxP3H:L. The receive FIFO depth is limited, therefore the bytes must be retrieved by reading UxRXB as they come in to avoid a receive FIFO Overrun condition.

Typically, two Stop bits are inserted between bytes. If either Stop bit is detected as a ‘0’ then the framing error for that byte will be set.

Since the DMX sequence always starts with a Break, the software can verify that it is in sync with the sequence by monitoring the RXBKIF flag to ensure that the next byte received after the RXBKIF is processed as the Start Code and subsequent bytes are processed as the expected data.

34.4 LIN Modes (Full-featured UARTs only)

LIN is a protocol used primarily in automotive applications. The LIN network consists of two kinds of software processes: a Master process and a Slave process. Each network has only one Master process and one or more Slave processes.

From a physical layer point of view, the UART on one processor may be driven by both a Master and a Slave process, as long as only one Master process exists on the network.

A LIN transaction consists of a Master process followed by a Slave process. The Slave process may involve more than one slave where one is transmitting and the other(s) are receiving. The transaction begins by the following Master process transmission sequence:

1. Break
2. Delimiter bit
3. Sync Field
4. PID byte

The PID determines which Slave processes are expected to respond to the master. When the PID byte is complete, the TX output remains in the Idle state. One or more of the Slave processes may respond to the Master process. If no one responds within the inter-byte period, the master is free to start another transmission. The inter-byte period is timed by software using a means other than the UART.

The Slave process follows the Master process. When the slave software recognizes the PID then that Slave process responds by either transmitting the required response or by receiving the transmitted data. Only Slave processes send data. Therefore, Slave processes receiving data are receiving that of another Slave process.

When a slave sends data, the slave UART automatically calculates the checksum for the transmitted bytes as they are sent and appends the inverted checksum byte to the slave response.

When a slave receives data, the checksum is accumulated on each byte as it is received using the same algorithm as the sending process. The last byte, which is the inverted checksum value calculated by the sending process, is added to the locally calculated checksum by the UART. The check passes when the result is all '1's, otherwise the check fails and the CERIF bit is set.

Two methods for computing the checksum are available: legacy and enhanced. The legacy checksum includes only the data bytes. The enhanced checksum includes the PID and the data. The C0EN control bit determines the checksum method. Setting C0EN to '1' selects the enhanced method. Software must select the appropriate method before the Start bit of the checksum byte is received.

34.4.1 LIN Master/Slave Mode

The LIN Master mode includes capabilities to generate Slave processes. The Master process stops at the PID transmission. Any data that is transmitted in Master/Slave mode is done as a Slave process. LIN Master/Slave mode is configured by the following settings:

- MODE = 1100
- TXEN = 1
- RXEN = 1
- UxBRG = Value to achieve desired baud rate
- TXPOL = 0 (for high Idle state)
- STP = desired Stop bits selection
- C0EN = desired Checksum mode
- RxyPPS = TX pin selection code
- TX pin TRIS control = 0
- ON = 1

Important: The TXEN bit must be set before the Master process is received and remain set while in LIN mode whether or not the Slave process is a transmitter.

The Master process is started by writing the PID to the UxP1L register when UxP2 is '0' and the UART is Idle. The UxTXIF will not be set in this case. Only the six Least Significant bits of UxP1L are used in the PID transmission.

The two Most Significant bits of the transmitted PID are PID parity bits. PID[6] is the exclusive-or of PID bits 0, 1, 2, and 4. PID[7] is the inverse of the exclusive-or of PID bits 1, 3, 4, and 5.

The UART hardware calculates and inserts these bits in the serial stream.

Writing UxP1L automatically clears the UxTXCHK and UxRXCHK registers and generates the Break, the delimiter bit, the Sync character (55h), and the PID transmission portion of the transaction. The data portion of the transaction that follows, if there is one, is a Slave process. See LIN Slave Mode for more details of that process. The master receives its own PID if RXEN is set. Software performs the Slave process corresponding to the PID that was sent and received. Attempting to write UxP1L before an active Master process is complete will not succeed. Instead, the TXWRE bit will be set.

34.4.2 LIN Slave Mode

The LIN Slave mode is configured by the following settings:

- MODE = 1011
- TXEN = 1
- RXEN = 1
- UxP2 = Number of data bytes to transmit
- UxP3 = Number of data bytes to receive
- UxBRG = Value to achieve default baud rate
- TXPOL = 0 (for high Idle state)
- STP = desired Stop bits selection

- C0EN = desired checksum mode
- RxyPPS = TX pin selection code
- TX pin TRIS control = 0
- ON = 1

The Slave process starts upon detecting a Break on the RX pin. The Break clears the UxTXCHK, UxRXCHK, UxP2, and UxP3 registers. At the end of the Break, the auto-baud circuity is activated and the baud rate is automatically set using the Sync character following the Break. The character following the Sync character is received as the PID code and is saved in the receive FIFO. The UART computes the two PID parity bits from the six Least Significant bits of the PID. If either parity bit does not match the corresponding bit of the received PID code, the PERIF flag is set and saved at the same FIFO location as the PID code. The UxRXIF bit is set indicating that the PID is available.

Software retrieves the PID by reading the UxRXB register and determines the Slave process to execute from that. The checksum method, number of data bytes, and whether to send or receive data, is defined by software according to the PID code.

34.4.2.1 LIN Slave Receiver

When the Slave process is a Receiver, the software performs the following tasks:

- The UxP3 register is written with a value equal to the number of data bytes to receive.
- The C0EN bit is set or cleared to select the appropriate checksum. This must be completed before the Start bit of the checksum byte is received.
- Each byte of the process response is read from UxRXB when UxRXIF is set.

The UART updates the checksum on each received byte. When the last data byte is received, the computed checksum total is stored in the UxRXCHK register. The next received byte is saved in the receive FIFO and added with the value in UxRXCHK. The result of this addition is not accessible. However, if the result is not all '1's, the CERIF bit is set. The CERIF flag persists until cleared by software. Software needs to read UxRXB to remove the checksum byte from the FIFO, but the byte can be discarded if not needed for any other purpose.

After the checksum is received, the UART ignores all activity on the RX pin until a Break starts the next transaction.

34.4.2.2 LIN Slave Transmitter

When the Slave process is a transmitter, software performs the following tasks in the order shown:

- The UxP2 register is written with a value equal to the number of bytes to transmit. This will enable the UxTXIF flag which is disabled when UxP2 is '0'
- The C0EN bit is set or cleared to select the appropriate checksum
- Each byte of the process response is written to UxTXB when UxTXIF is set

The UART accumulates the checksum as each byte is written to UxTXB. After the last byte is written, the UART stores the calculated checksum in the UxTXCHK register and transmits the inverted result as the last byte in the response.

The UxTXIF flag is disabled when the number of bytes specified by the value in the UxP2 register have been written. Any writes to UxTXB that exceed the UxP2 count will be ignored and set the TXWRE flag.

34.5 DALI Mode (Full-featured UARTs only)

DALI is a protocol used for intelligent lighting control for building automation. The protocol consists of Control Devices and Control Gear. A Control Device is an application controller that sends out commands to the light fixtures. The light fixture itself is termed as a Control Gear. The communication is done using Manchester encoding, which is performed by the UART hardware.

Manchester encoding consists of the clock and data in a single bit stream (refer to Figure 34-9). A high-to-low or a low-to-high transition always occurs in the middle of the bit period and may or may not occur at the bit period boundaries. When the consecutive bits in the bit stream are of the same value (i.e., consecutive '1's or consecutive '0's) a transition occurs at the bit boundary. However, when the bit value changes, there is no transition at the bit boundary. According to the standard, a half-bit time is typically 416.7 µs long. A double half-bit time or a single bit is typically 833.3 µs.

The protocol is inherently half-duplex. Communication over the bus occurs in the form of forward and backward frames. Wait times between the frames are defined in the standard to prevent collision between the frames.

A Control Device transmission is termed as the forward frame. In the DALI 2.0 standard, a forward frame can be two or three bytes in length. The two-byte forward frame is used for communication between Control Device and Control Gear whereas the three-byte forward frame is used for communication between Control Devices on the bus. The first byte in the forward frame is the control byte and is followed by either one or two data bytes. The transaction begins when the Control Device starts a transmission. Unlike other protocols, each byte in the frame is transmitted MSb first. Typical frame timing is shown below.

Figure 34-7. DALI Frame Timing

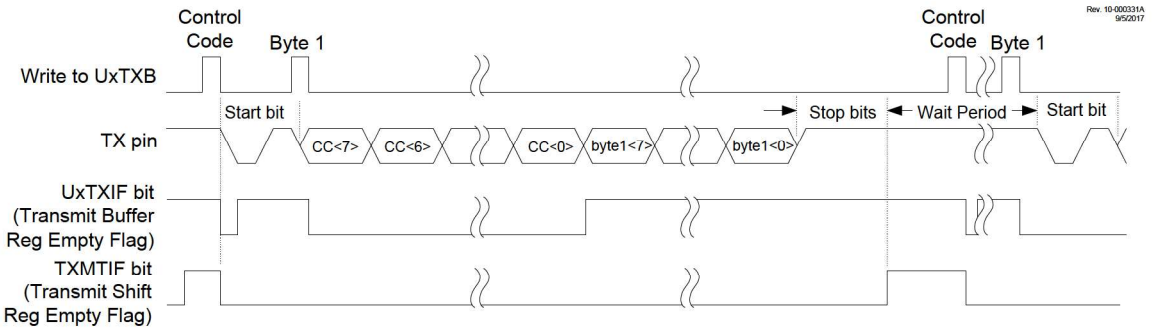

During the communication between two Control Devices, three bytes are required to be transmitted. In this case, the software must write the third byte to UxTXB as soon as UxTXIF goes true and before the output shifter becomes empty. This ensures that the three bytes of the forward frame are transmitted back-to-back without any interruption.

All Control Gear on the bus receive the forward frame. If the forward frame requires a reply to be sent, one of the Control Gear may respond with a single byte, called the backward frame. The 2.0 standard requires the Control Gear to begin transmission of the backward frame between 5.5 ms to 10.5 ms (~14 to 22 half-bit times) after reception of the forward frame. Once the backward frame is received by the Control Device, it is required to wait a minimum of 2.4 ms (~6 half-bit times). After this wait time, the Control Device is free to transmit another forward frame. Refer to the figure below.

Figure 34-8. DALI Forward/Backward Frame Timing

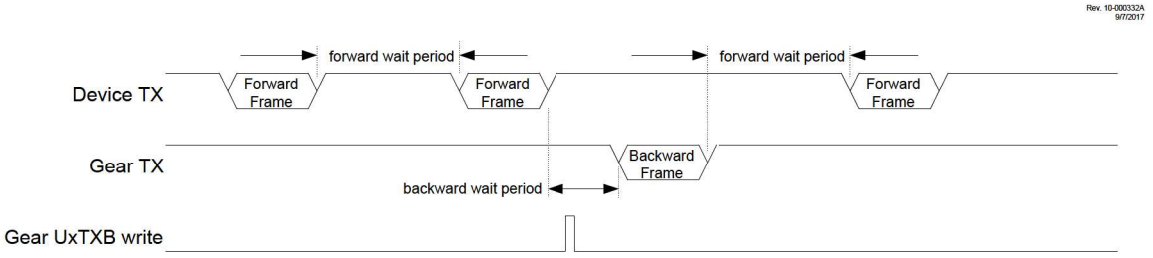

A Start bit is used to indicate the start of the forward and backward frames. When ABDEN = 0, the receiver bit rate is determined by the BRG register. When ABDEN = 1, the first bit synchronizes the receiver with the transmitter and sets the receiver bit rate. The low period of the Start bit is measured and is used as the timing reference for all data bits in the forward and backward frames. The ABDOVF bit is set if the Start bit low period causes the measurement counter to overflow. All the bits following the Start bit are data bits. The bit stream terminates when no transition is detected in the middle of a bit period. Refer to the figure below.

Figure 34-9. Manchester Timing

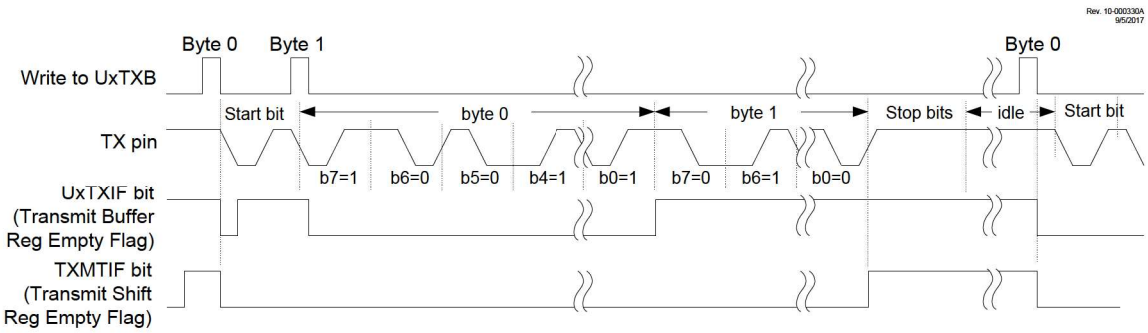

The forward and backward frames are terminated by two Idle bit periods or Stop bits. Normally, these start in the first bit period of a byte. If both Stop bits are valid, the byte reception is terminated.

If either of the Stop bits is invalid, the frame is tagged as invalid by saving it as a null byte and setting the framing error in the receive FIFO.

A framing error also occurs when no transition is detected on the bus in the middle of a bit period when the byte reception is not complete. In such a scenario, the byte will be saved with the FERIF bit set.

34.5.1 Control Device

The Control Device mode is configured with the following settings:

- MODE = `'b1000`
- TXEN = `1`
- RXEN = `1`
- UxP1 = Forward frames are held for transmission with this number of half-bit periods after the completion of a forward or backward frame.
- UxP2 = Forward/backward frame threshold delimiter. Any reception that starts this number of half-bit periods after the completion of a forward or backward frame is detected as forward frame and sets the PERIF flag of the corresponding received byte.
- UxBRG = Value to achieve 1200 baud rate
- TXPOL = appropriate polarity for interface circuit
- STP = `'b10` for two Stop bits
- RxyPPS = TX pin selection code
- TX pin TRIS control = `0`
- ON = `1`

A forward frame is initiated by writing the control byte to the UxTXB register. After sending the control byte, each data byte must be written to the UxTXB register as soon as UxTXIF goes true. It is necessary to perform every write after UxTXIF goes true, to ensure that the transmit buffer is ready to accept the byte. Each write must also occur before the TXMTIF bit goes true, to ensure that the bit stream of the forward frame is generated without interruption.

When TXMTIF goes true, indicating the transmit shift register has completed sending the last byte in the frame, the TX output is held in Idle state for the number of half-bit periods selected by the STP bits.

After the last Stop bit, the TX output is held in the Idle state for an additional wait time determined by the half-bit period count in the UxP1 register. For example, a 2450 µs delay (~6 half-bit times) requires a value of 6 in UxP1L.

Any writes to the UxTXB register that occur after TXMTIF goes true, but before the UxP1 wait time expires, are held and then transmitted immediately following the wait time. If a backward frame is received during the wait time, any bytes that may have been written to UxTXB will be transmitted after completion of the backward frame reception plus the UxP1 wait time.

The wait timer is reset by the backward frame and starts over immediately following the reception of the Stop bits of the backward frame. Data pending in the transmit shift register will be sent when the wait time elapses.

To replace or delete any pending forward frame data, the TXBE bit needs to be set to flush the shift register and transmit buffer. A new control byte can then be written to the UxTXB register. The control byte will be held in the buffer and sent at the beginning of the next forward frame following the UxP1 wait time.

In Control Device mode, PERIF is set when a forward frame is received. This helps the software to determine whether the received byte is part of a forward frame from a Control Device (either from the Control Device under consideration or from another Control Device on the bus) or a backward frame from a Control Gear.

34.5.2 Control Gear

The Control Gear mode is configured with the following settings:

- MODE = 'b1001
- TXEN = 1
- RXEN = 1
- UxP1 = Back Frames are held for transmission this number of half-bit periods after the completion of a Forward Frame.
- UxP2 = Forward/Back Frame threshold delimiter. Idle periods longer than this number of half-bit periods are detected as Forward Frames.
- UxBRG = Value to achieve 1200 baud rate
- TXPOL = Appropriate polarity for interface circuit
- RXPOL = Same as TXPOL
- STP = 'b10 for two Stop bits
- RxyPPS = TX pin output code
- TX pin TRIS control = 0
- RXPPS = RX pin selection code
- RX pin TRIS control = 1
- Input pin ANSEL bit = 0
- ON = 1

The UART starts listening for a forward frame when the Control Gear mode is entered. Only the frames that follow an Idle period longer than UxP2 half-bit periods are detected as forward frames. Backward frames from other Control Gear are ignored. Only forward frames will be stored in UxRXB. This is necessary because a backward frame can be sent only as a response to a forward frame.

The forward frame is received one byte at a time in the receive FIFO and retrieved by reading the UxRXB register. The end of the forward frame starts a timer to delay the backward frame response by a wait time equal to the number of half-bit periods stored in UxP1.

The data received in the forward frame is processed by the application software. If the application decides to send a backward frame in response to the forward frame, the value of the backward frame is written to UxTXB. This value is held for transmission in the transmit shift register until the wait time expires, being transmitted afterwards.

If the backward frame data is written to UxTXB after the wait time has expired, it is held in the UxTXB register until the end of the wait time following the next forward frame. The TXMTIF bit is false when the backward frame data is held in the transmit shift register. Receiving a UxRXIF interrupt before the TXMTIF goes true indicates that the backward frame write was too late and another forward frame was received before sending the backward frame. The pending backward frame is flushed by setting the TXBE bit to prevent it from being sent after the next forward frame.

34.6 General Purpose Manchester (Full-featured UARTs only)

General purpose Manchester is a subset of the DALI mode. When the UxP1L register is cleared, there is no minimum wait time between frames. This allows full and half-duplex operation because writes to the UxTXB register are not held waiting for a receive operation to complete.

General purpose Manchester operation maintains all other aspects of DALI mode as shown in Figure 34-9 such as:

- Single-pulse Start bit
- Most Significant bit first

- No stop periods between back-to-back bytes

The general purpose Manchester mode is configured with the following settings:

- MODE = 'b1000
- TXEN = 1
- RXEN = 1
- UxP1 = 0h
- UxBRG = Desired baud rate
- TXPOL and RXPOL = Desired Idle state
- STP = Desired number of stop periods
- RxyPPS = TX pin selection code
- TX pin TRIS control = 0
- RXPPS = RX pin selection code
- RX pin TRIS control = 1
- Input pin ANSEL bit = 0
- ON = 1

The Manchester bit stream timing is shown in Figure 34-9.

34.7 Polarity

Receive and transmit polarity is user selectable and affects all modes of operation.

The idle level is programmable with the TXPOL and RXPOL polarity control bits. Both control bits default to '0', which selects a high idle level for transmit and receive. The low level Idle state is selected by setting the control bit to '1'. TXPOL controls the TX idle level. RXPOL controls the RX idle level.

34.8 Stop Bits

The number of Stop bits is user selectable with the STP bits. The STP bits affect all modes of operation.

Stop bits selections are shown in the table below:

Table 34-1.

Transmitter Stop bits	Receiver verification
1	Verify Stop bit
1.5	Verify first Stop bit
2	Verify both Stop bits
2	Verify only first Stop bit

In all modes, except DALI, the transmitter is Idle for the number of Stop bit periods between each consecutively transmitted word. In DALI, the Stop bits are generated after the last bit in the transmitted data stream.

The input is checked for the idle level in the middle of the first Stop bit, when receive verify on first is selected, as well as in the middle of the second Stop bit, when verify on both is selected. If any Stop bit verification indicates a non-idle level, the framing error FERIF bit is set for the received word.

34.8.1 Delayed Receive Interrupt

When operating in Half-Duplex mode, where the microcontroller needs to reverse the transceiver direction after a reception, it may be more convenient to hold off the UxRXIF interrupt until the end of the Stop bits to avoid line contention. The user selects when the UxRXIF interrupt occurs with the STPMD bit. When STPMD is '1', the UxRXIF interrupt occurs at the end of the last Stop bit. When STPMD is '0', the UxRXIF interrupt occurs when the received

byte is stored in the receive FIFO. When STP = 10, the store operation is performed in the middle of the second Stop bit, otherwise, it is performed in the middle of the first Stop bit.

The FERIF and PERIF interrupts are not delayed with STPMD. When STPMD is set, the preferred indicator for reversing transceiver direction is the UxRXIF interrupt because it is delayed whereas the others are not.

34.9 Operation After FIFO Overflow

The Receive Shift Register (RSR) can be configured to stop or continue running during a receive FIFO Overflow condition. Stopped operation is the Legacy mode.

When the RSR continues to run during an Overflow condition, the first word received after clearing the overflow will always be valid.

When the RSR is stopped during an Overflow condition, the synchronization with the Start bits is lost. Therefore, the first word received after the overflow is cleared may start in the middle of a word.

Operation during overflow is selected with the RUNOVF bit. When the RUNOVF bit is set, the receiver maintains synchronization with the Start bits throughout the Overflow condition.

34.10 Receive and Transmit Buffers

The UART uses small buffer areas to transmit and receive data. These are sometimes referred to as FIFOs.

The receiver has a Receive Shift Register (RSR) and two or more buffer registers. The buffer at the top of the FIFO (earliest byte to enter the FIFO) is by retrieved by reading the UxRXB register.

The transmitter has one or more Transmit Shift Register (TSR) and one buffer register. Writes to UxTXB go to the transmit buffer then immediately to the TSR, if it is empty. When the TSR is not empty, writes to UxTXB are held then transferred to the TSR when it becomes available.

34.10.1 FIFO Status

The UxFIFO register contains several Status bits for determining the state of the receive and transmit buffers.

The RXBE bit indicates that the receive FIFO is empty. This bit is essentially the inverse of UxRXIF. The RXBF bit indicates that the receive FIFO is full.

The TXBE bit indicates that the transmit buffer is empty (same as UxTXIF) and the TXBF bit indicates that the buffer is full. A third transmitter Status bit, TXWRE (transmit write error), is set whenever a UxTXB write is performed when the TXBF bit is set. This indicates that the write was unsuccessful.

34.10.2 FIFO Reset

All modes support resetting the receive and transmit buffers.

The receive buffer is flushed and all unread data discarded when the RXBE bit is written to '1'. Instead of using a BSF instruction to set RXBE, the MOVWF instruction with the TXBE bit cleared should be used to avoid inadvertently clearing a byte pending in the TSR when UxTXB is empty.

Data written to UxTXB when TXEN is low will be held in the Transmit Shift Register (TSR) then sent when TXEN is set. The transmit buffer and inactive TSR are flushed by setting the TXBE bit. Setting TXBE while a character is actively transmitting from the TSR will complete the transmission without being flushed.

Clearing the ON bit will discard all received data and transmit data pending in the TSR and UxTXB.

34.11 Flow Control

This section does not apply to the LIN, DALI, or DMX modes.

Flow control is the means by which a sending UART data stream can be suspended by a receiving UART. Flow control prevents input buffers from overflowing without software intervention. The UART supports both hardware and XON/XOFF methods of flow control.

The flow control method is selected with the FLO bits. Flow control is disabled when both bits are cleared.

34.11.1 Hardware Flow Control

The hardware flow control is selected by setting the FLO bits to '10'.

The hardware flow control consists of three lines. The RS-232 signal names for two of these are $\overline{RTS}$, and $\overline{CTS}$. Both are low true. The third line is called TXDE for transmit drive enable which may be used to control an RS-485 transceiver. This output is high when the TX output is actively sending a character and low at all other times. The UART is configured as DTE (computer) equipment which means $\overline{RTS}$ is an output and $\overline{CTS}$ is an input.

The $\overline{RTS}$ and $\overline{CTS}$ signals work as a pair to control the transmission flow. A DTE-to-DTE configuration connects the $\overline{RTS}$ output of the receiving UART to the $\overline{CTS}$ input of the sending UART. Refer to the following figure.

Figure 34-10. Hardware Flow Control Connections

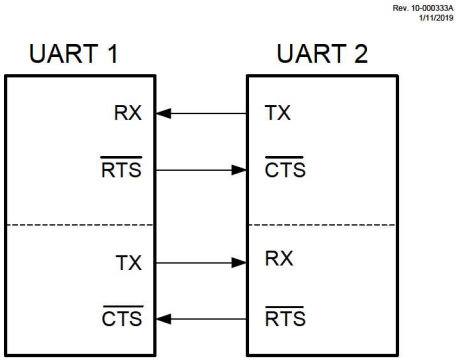

The UART receiving data asserts the $\overline{RTS}$ output low when the input FIFO is empty. When a character is received, the $\overline{RTS}$ output goes high until the UxRXB is read to free up both FIFO locations.

When the $\overline{CTS}$ input goes high after a byte has started to transmit, the transmission will complete normally. The receiver accommodates this by accepting the character in the second FIFO location even when the $\overline{CTS}$ input is high.

34.11.2 RS-485 Transceiver Control

The hardware flow control can be used to control the direction of an RS-485 transceiver as shown in the following figure. The $\overline{CTS}$ input will be configured to be always enabled by setting the UxCTSPPS selection to an unimplemented PORT pin, such as RD0. When the signal and control lines are configured as shown in the figure below, the UART will not receive its own transmissions. To verify that there are no collisions on the RS-485 lines, the transceiver RE control can be disconnected from TXDE and tied low, thereby enabling loopback reception of all transmissions. See Collision Detection for more information.

Figure 34-11. RS-485 Configuration

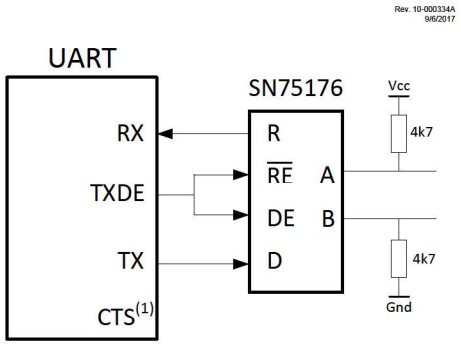

Note 1: Configure UxCTSPPS to an unimplemented input such as RD0. (e.g. UxCTSPPS = 0x18)

34.11.3 XON/XOFF Flow Control

XON/XOFF flow control is selected by setting the FLO bits to '01'.

XON/XOFF is a data-based flow control method. The signals to suspend and resume transmission are special characters sent by the receiver to the transmitter. The advantage is that additional hardware lines are not needed.

XON/XOFF flow control requires full-duplex operation because the transmitter must be able to receive the signal to suspend transmitting while the transmission is in progress. Although XON and XOFF are not defined in the ASCII code, the generally accepted values are 13h for XOFF and 11h for XON. The UART uses those codes.

The transmitter defaults to XON, or transmitter enabled. This state is also indicated by the read-only XON bit.

When an XOFF character is received, the transmitter stops transmitting after completing the character actively being transmitted. The transmitter remains disabled until an XON character is received.

XON will be forced on when software toggles the TXEN bit.

When the RUNOVF bit is set, the XON and XOFF characters continue to be received and processed without the need to clear the input FIFO by reading UxRXB. However, if the RUNOVF bit is clear then UxRXB must be read to avoid a receive overflow which will suspend flow control when the receive buffer overflows.

34.12 Checksum (Full-featured UARTs only)

This section does not apply to the LIN mode, which handles checksums automatically.

The transmit and receive checksum adders are enabled when the C0EN bit is set. When enabled, the adders accumulate every byte that is transmitted or received. The accumulated sum includes the carry of the addition. Software is responsible for clearing the checksum registers before a transaction and performing the check at the end of the transaction.

The following examples illustrate how the checksum registers could be used in the Asynchronous modes.

34.12.1 Transmit Checksum Method

1. Clear the UxTXCHK register.
2. Set the C0EN bit.
3. Send all bytes of the transaction output.
4. Invert UxTXCHK and send the result as the last byte of the transaction.

34.12.2 Receive Checksum Method

1. Clear the UxRXCHK register.
2. Set the C0EN bit.
3. Receive all bytes in the transaction including the checksum byte.
4. Set MSb of UxRXCHK if 7-bit mode is selected.
5. Add '1' to UxRXCHK.
6. If the result is '0', the checksum passes, otherwise it fails.

The CERIF Checksum Interrupt flag is not active in any mode other than LIN.

34.13 Collision Detection (Full-featured UARTs only)

External forces that interfere with the transmit line are detected in all modes of operation with collision detection. Collision detection is always active when RXEN and TXEN are both set. When the receive input is connected to the transmit output through either the same I/O pin or external circuitry, a character will be received for every character transmitted. The collision detection circuit provides a warning when the word received does not match the word transmitted.

The TXCIF flag is used to signal collisions. This signal is only useful when the TX output is looped back to the RX input and everything that is transmitted is expected to be received. If more than one transmitter is active at the same time, it can be assumed that the TX word will not match the RX word. The TXCIF detects this mismatch and flags an interrupt. The TXCIF bit will also be set in DALI mode transmissions when the received bit is missing the expected mid-bit transition.

Collision detection is always active, regardless of whether or not the RX input is connected to the TX output. It is up to the user to disable the TXCIE bit when collision interrupts are not required. The software overhead of unloading the receive buffer of transmitted data is avoided by setting the RUNOVF bit and ignoring the receive interrupt and letting the receive buffer overflow. When the transmission is complete, prepare for receiving data by flushing the receive buffer (see FIFO Reset) and clearing the RXFOIF overflow flag.

34.14 RX/TX Activity Time-out

The UART works in conjunction with the HLT timers to monitor activity on the RX and TX lines. Use this feature to determine when there has been no activity on the receive or transmit lines for a user-specified period of time.

To use this feature, set the HLT to the desired time-out period by a combination of the HLT clock source, timer prescale value, and timer period registers. Configure the HLT to reset on the UART TX or RX line and start the HLT at the same time the UART is started. UART activity will keep resetting the HLT to prevent a full HLT period from elapsing. When there has been no activity on the selected TX or RX line for longer than the HLT period, then an HLT interrupt will occur signaling the time-out event.

For example, the following register settings will configure HLT2 for a 5 ms time-out of no activity on U1RX:

- T2PR = 0x9C (156 prescale periods)
- T2CLKCON = 0x05 (500 kHz internal oscillator)
- T2HLT = 0x04 (free running, reset on rising edge)
- T2RST = 0x15 (reset on U1RX)
- T2CON = 0xC0 (Timer2 on with 1:16 prescale)

34.15 Clock Accuracy With Asynchronous Operation

The factory calibrates the internal oscillator block output (INTOSC). However, the INTOSC frequency may drift as V_{DD} or temperature changes, and this directly affects the asynchronous baud rate. Two methods may be used to adjust the baud rate clock, but both require a reference clock source of some kind.

The first (preferred) method uses the OSCTUNE register to adjust the INTOSC output. Adjusting the value of the OSCTUNE register allows for fine resolution changes to the system clock source. See **"HFINTOSC Frequency Tuning"** for more information.

The other method adjusts the value of the Baud Rate Generator. This can be done automatically with the Auto-Baud Detect feature (see Auto-Baud Detect). There may not be fine enough resolution when adjusting the Baud Rate Generator to compensate for a gradual change of the peripheral clock frequency.

34.16 UART Baud Rate Generator

The Baud Rate Generator (BRG) is a 16-bit timer that is dedicated to the support of the UART operation. The UxBRG register pair determines the period of the free running baud rate timer. The multiplier of the baud rate period is determined by the BRGS bit.

The high baud rate range (BRGS = 1) is intended to extend the baud rate range up to a faster rate when the desired baud rate is not possible otherwise and to improve the baud rate resolution at high baud rates. Using the normal baud rate range (BRGS = 0) is recommended when the desired baud rate is achievable with either range.

Important: BRGS = 1 is not supported in the DALI mode.

Writing a new value to UxBRG causes the BRG timer to be reset (or cleared). This ensures that the BRG does not wait for a timer overflow before outputting the new baud rate.

If the system clock is changed during an active receive operation, a receive error or data loss may result. To avoid this problem, check the status of the RXIDL bit to make sure that the receive operation is Idle before changing the system clock. The following table contains formulas for determining the baud rate.

Table 34-2. Baud Rate Formulas

BRGS	BRG/UART Mode	Baud Rate Formula
1	High Rate	Fosc/[4(UxBRG+1)]
0	Normal Rate	Fosc/[16(UxBRG+1)]

The following example provides a sample calculation for determining the baud rate and baud rate error.

Example 34-1. Baud Rate Error Calculation

For a device with Fosc of 16 MHz, desired baud rate of 9600, asynchronous mode, and BRGS = 0.

$$DesiredBaudrate = \frac{F_{OSC}}{16 \times (UxBRG + 1)}$$

Solving for UxBRG:

$$UxBRG = \frac{F_{OSC}}{16 \times DesiredBaudrate} - 1$$

$$UxBRG = \frac{16000000}{16 \times 9600} - 1$$

$$UxBRG - 103.17 \sim 103$$

$$CalculatedBaudrate = \frac{16000000}{16 \times (103 + 1)}$$

$$CalculatedBaudrate = 9615$$

$$Error = \frac{CalculatedBaudrate - DesiredBaudrate}{DesiredBaudrate}$$

$$Error = \frac{9615 - 9600}{9600}$$

$$Error \simeq 0.16\,\%$$

34.16.1 Auto-Baud Detect

The UART module supports automatic detection and calibration of the baud rate in the 8-bit asynchronous and LIN modes. However, setting ABDEN to start auto-baud detection is neither necessary, nor possible in LIN mode because that mode supports auto-baud detection automatically at the beginning of every data packet. Enabling auto-baud detect with the ABDEN bit applies to the asynchronous modes only.

When Auto-Baud Detect (ABD) is active, the clock to the BRG is reversed. Rather than the BRG clocking the incoming RX signal, the RX signal is timing the BRG. The Baud Rate Generator is used to time the period of a received 55h (ASCII “U”), which is the Sync character for the LIN bus. The unique feature of this character is that it has five falling edges, including the Start bit edge, and five rising edges, including the Stop bit edge.

In 8-bit Asynchronous mode, setting the ABDEN bit enables the auto-baud calibration sequence. The first falling edge of the RX input after ABDEN is set will start the auto-baud calibration sequence. While the ABD sequence takes place, the UART state machine is held in idle. On the first falling edge of the receive line, the UxBRG begins counting up using the BRG counter clock, as shown in the following figure. The fifth falling edge will occur on the RX pin at the beginning of the bit 7 period. At that time, an accumulated value totaling the proper BRG period is left in the UxBRG register pair, the ABDEN bit is automatically cleared and the ABDIF interrupt flag is set. ABDIF must be cleared by software.

Figure 34-12. Automatic Baud Rate Calibration

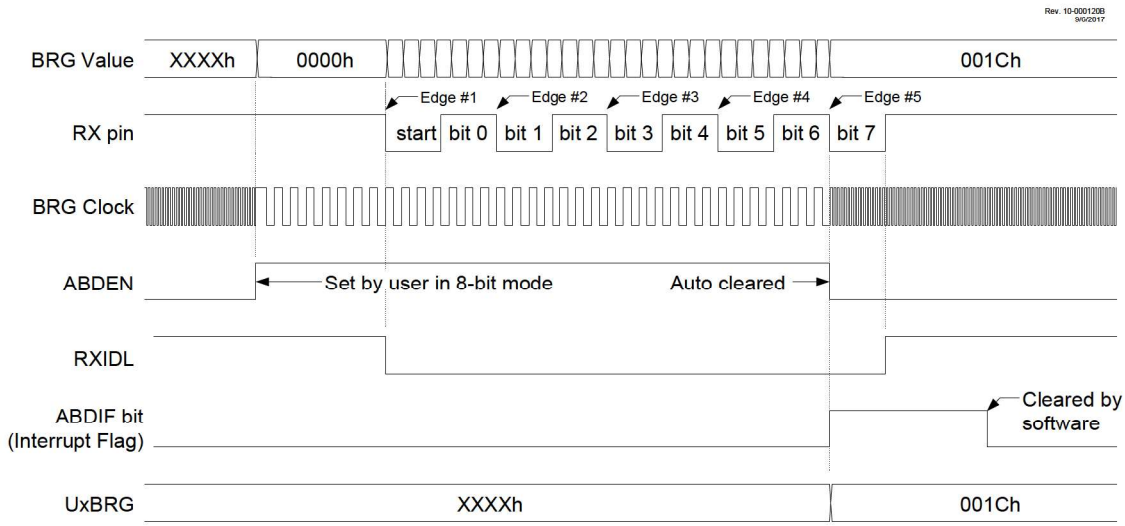

RXIDL indicates that the sync input is active. RXIDL will go low on the first falling edge and go high on the fifth rising edge.

The BRG auto-baud clock is determined by the BRGS bit, as shown in the following table.

Table 34-3. BRG Counter Clock Rates

BRGS	BRG Base Clock	BRG ABD Clock
1	Fosc/4	Fosc/32
0	Fosc/16	Fosc/128

During ABD, the internal BRG register is used as a 16-bit counter. However, the UxBRG registers retain the previous BRG value until the auto-baud process is successfully completed. While calibrating the baud rate period, the internal BRG register is clocked at 1/8th the BRG base clock rate. The resulting byte measurement is the average bit time when clocked at full speed and is transferred to the UxBRG registers when complete.

Important:

1. When both the WUE and ABDEN bits are set, the auto-baud detection will occur on the byte following the Break character (see Auto Wake-on-Break).
2. It is up to the user to verify the incoming character baud rate is within the range of the selected BRG clock source. Some combinations of oscillator frequency and UART baud rates are not possible.

34.16.2 Auto-Baud Overflow

During the course of automatic baud detection, the ABDOVF bit will be set if the baud rate counter overflows before the fifth falling edge is detected on the RX pin. The ABDOVF bit indicates that the counter has exceeded the maximum count that can fit in the 16 bits of the UxBRG register pair. After the ABDOVF bit has been set, the state machine continues to search until the fifth falling edge is detected on the RX pin. Upon detecting the fifth falling RX edge, the hardware will set the ABDIF Interrupt flag and clear the ABDEN bit. The UxBRG register values retain their previous value. The ABDIF flag and ABDOVF flag can be cleared by software directly. To generate an interrupt on an Auto-baud Overflow condition, all the following bits must be set:

- ABDOVE bit
- UxEIE bit in the PIEx register
- Global Interrupt Enable bits

To terminate the auto-baud process before the ABDIF flag is set, clear the ABDEN bit, then clear the ABDOVF bit.

34.16.3 Auto Wake-on-Break

During Sleep mode, all clocks to the UART are suspended. Because of this, the Baud Rate Generator is inactive and a proper character reception cannot be performed. The Auto Wake-on-Break feature allows the controller to wake up due to activity on the RX line.

The Auto Wake-up feature is enabled by setting both the WUE bit and the UxIE bit in the PIEx register. Once set, the normal receive sequence on RX is disabled, and the UART remains in an Idle state, monitoring for a wake-up event independent of the CPU mode. A wake-up event consists of a transition out of the Idle state on the RX line. (This coincides with the start of a Break or a wake-up signal character for the LIN protocol.)

The UART module generates a WUIF interrupt coincident with the wake-up event. The interrupt is generated synchronously to the Q clocks in normal CPU operating modes (Figure 34-13), and asynchronously, if the device is in Sleep mode (Figure 34-14). The interrupt condition is cleared by clearing the WUIF bit.

Figure 34-13. Auto Wake-Up Timing During Normal Operation

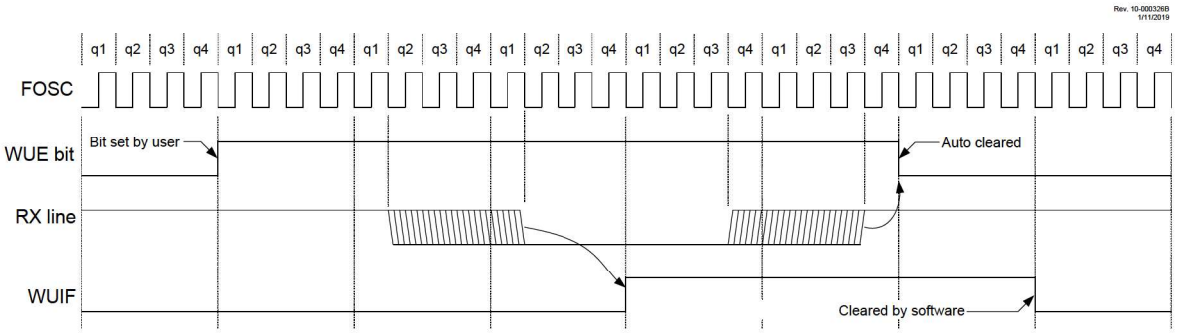

Note 1: The UART remains in Idle while the WUE bit is set.

Figure 34-14. Auto Wake-Up Timing During Sleep

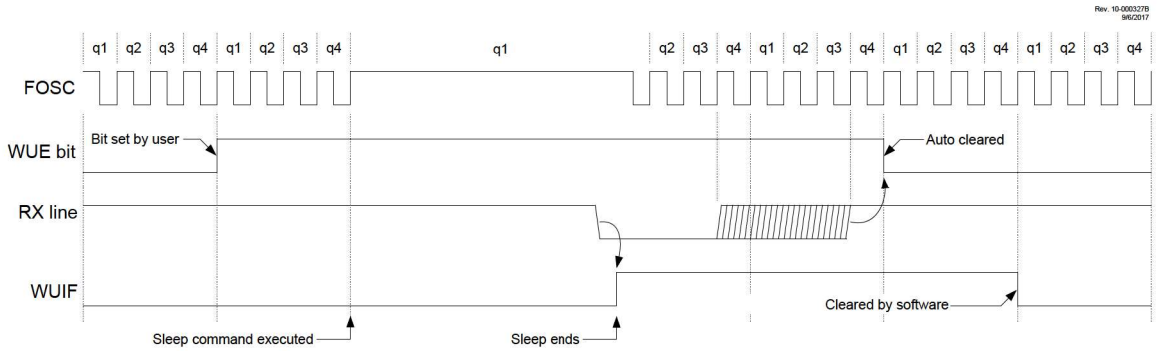

Note 1: The UART remains in idle while the WUE bit is set.

To generate an interrupt on a wake-up event, all the following bits must be set:

- UxIE bit in the PIEx register
- Global interrupt enables

The WUE bit is automatically cleared by the transition to the Idle state on the RX line at the end of the Break. This signals to the user that the Break event is over. At this point, the UART module is in Idle mode, waiting to receive the next character.

34.16.3.1 Auto Wake-Up Special Considerations

Break Character

To avoid character errors or character fragments during a wake-up event, all bits in the character causing the Wake event must be zero.

When the wake-up is enabled, the function works independent of the low time on the data stream. If the WUE bit is set and a valid non-zero character is received, the low time from the Start bit to the first rising edge will be interpreted as the wake-up event. The remaining bits of the character will be received as a fragmented character and subsequent characters can result in framing or overrun errors.

Therefore, the initial character of the transmission must be all zeros. This must be eleven or more bit times, 13 bit times recommended for LIN bus, or any number of bit times for standard RS-232 devices.

Oscillator Start-up Time

The oscillator start-up time must be considered, especially in applications using oscillators with longer start-up intervals (i.e., LP, XT or HS/PLL modes). The Sync Break (or wake-up signal) character must be of sufficient length, and be followed by a sufficient interval, to allow enough time for the selected oscillator to start and provide proper initialization of the UART.

The WUE Bit

To ensure that no actual data is lost, check the RXIDL bit to verify that a receive operation is not in process before setting the WUE bit. If a receive operation is not occurring, the WUE bit may then be set just prior to entering the Sleep mode.

34.17 Transmitting a Break

The UART module has the capability of sending either a fixed length Break period or a software-timed Break period. The fixed length Break consists of a Start bit, followed by 12 '0' bits and a Stop bit. The software-timed Break is generated by setting and clearing the BRKOVR bit.

To send the fixed length Break, set the SENDB and TXEN bits. The Break sequence is then initiated by a write to UxTXB. The timed Break will occur first, followed by the character written to UxTXB that initiated the Break. The initiating character is typically the Sync character of the LIN specification.

SENDB is disabled in the LIN and DMX modes because those modes generate the Break sequence automatically.

The SENDB bit is automatically reset by hardware after the Break Stop bit is complete.

The TXMTIF bit indicates when the transmit operation is Active or Idle, just as it does during normal transmission. The following figure illustrates the Break sequence.

Figure 34-15. Send-Break Sequence

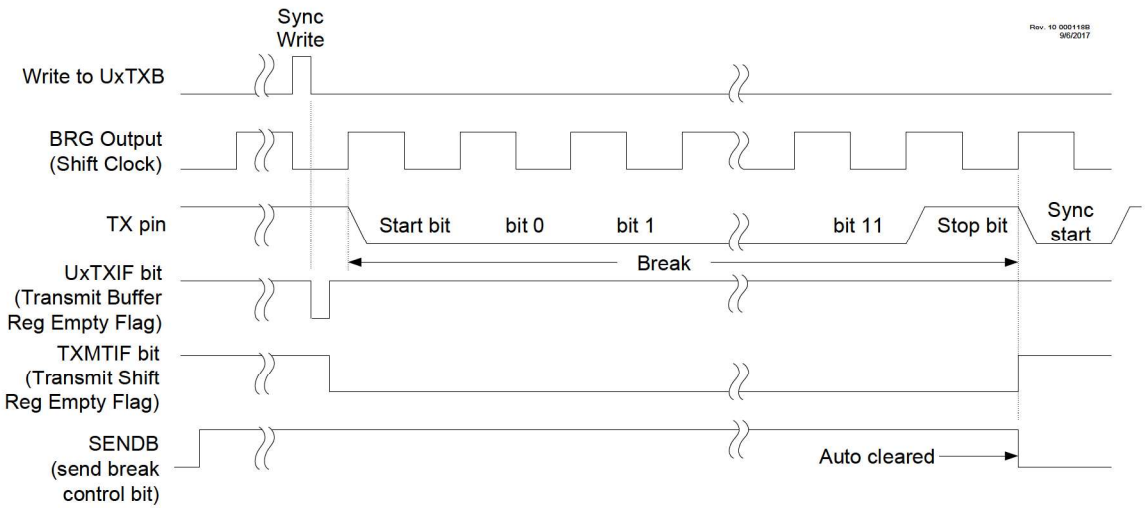

34.18 Receiving a Break

The UART has counters to detect when the RX input remains in the Space state for an extended period of time. When this happens, the RXBKIF bit is set.

A Break is detected when the RX input remains in the Space state for 11 bit periods for asynchronous and LIN modes, and 23 bit periods for DMX mode.

The user can select to receive the Break interrupt as soon as the Break is detected or at the end of the Break, when the RX input returns to the Idle state. When the RXBIMD bit is '1', then RXBKIF is set immediately upon Break detection. When RXBIMD is '0', then RXBKIF is set when the RX input returns to the Idle state.

34.19 UART Operation During Sleep

The UART ceases to operate during Sleep. The safe way to wake the device from Sleep by a serial operation is to use the Wake-on-Break feature of the UART. See Auto Wake-on-Break.

34.20 Register Definitions: UART

Long bit name prefixes for the UART peripherals are shown in the following table. Refer to the **"Long Bit Names"** section in the **"Register and Bit Naming Conventions"** chapter for more information.

Table 34-4. UART Long bit name prefixes

Peripheral	Bit Name Prefix
UART1 (full featured)	U1
UART2 (limited features)	U2

.....continued	
Peripheral	**Bit Name Prefix**
UART3 (limited features)	U3

34.20.1 UxCON0

Name: UxCON0
Address: 0x2AB,0x2BE,0x2D1

UART Control Register 0

Bit	7	6	5	4	3	2	1	0
	BRGS	ABDEN	TXEN	RXEN	MODE[3:0]			
Access	R/W	R/W	R/W	R/W	R/W	R/W	R/W	R/W
Reset	0	0	0	0	0	0	0	0

Bit 7 – BRGS Baud Rate Generator Speed Select

Value	Description
1	Baud Rate Generator is high speed with 4 baud clocks per bit
0	Baud Rate Generator is normal speed with 16 baud clocks per bit

Bit 6 – ABDEN Auto-baud Detect Enable(3)

Value	Description
1	Auto-baud is enabled. Receiver is waiting for Sync character (0x55)
0	Auto-baud is not enabled or auto-baud is complete

Bit 5 – TXEN Transmit Enable Control(2)

Value	Description
1	Transmit is enabled. TX output pin drive is forced on when transmission is active, and controlled by PORT TRIS control when transmission is idle.
0	Transmit is disabled. TX output pin drive is controlled by PORT TRIS control

Bit 4 – RXEN Receive Enable Control(2)

Value	Description
1	Receiver is enabled
0	Receiver is disabled

Bits 3:0 – MODE[3:0] UART Mode Select(1)

Value	Description
1111-1101	Reserved
1100	LIN Master/Slave mode(4)
1011	LIN Slave-Only mode(4)
1010	DMX mode(4)
1001	DALI Control Gear mode(4)
1000	DALI Control Device mode(4)
0111-0101	Reserved
0100	Asynchronous 9-bit UART Address mode. 9th bit: 1 = address, 0 = data
0011	Asynchronous 8-bit UART mode with 9th bit even parity
0010	Asynchronous 8-bit UART mode with 9th bit odd parity
0001	Asynchronous 7-bit UART mode
0000	Asynchronous 8-bit UART mode

Notes:

1. Changing the UART MODE while ON = 1 may cause unexpected results.
2. Clearing TXEN or RXEN will not clear the corresponding buffers. Use TXBE or RXBE to clear the buffers.
3. ABDEN is read-only when MODE > 'b0111.
4. Full-featured UARTs only.

34.20.2 UxCON1

Name: UxCON1
Address: 0x2AC,0x2BF,0x2D2

UART Control Register 1

Bit	7	6	5	4	3	2	1	0
	ON			WUE	RXBIMD		BRKOVR	SENDB
Access	R/W			R/W/HC	R/W		R/W	R/W/HC
Reset	0			0	0		0	0

Bit 7 – ON Serial Port Enable

Value	Description
1	Serial port enabled
0	Serial port disabled (held in Reset)

Bit 4 – WUE Wake-up Enable

Value	Description
1	Receiver is waiting for falling RX input edge which will set the UxIF bit. Cleared by hardware on wake event. Also requires UxIE bit of PIEx to enable wake
0	Receiver operates normally

Bit 3 – RXBIMD Receive Break Interrupt Mode Select

Value	Description
1	Set RXBKIF immediately when RX in has been low for the minimum Break time
0	Set RXBKIF on rising RX input after RX in has been low for the minimum Break time

Bit 1 – BRKOVR Send Break Software Override

Value	Description
1	TX output is forced to non-idle state
0	TX output is driven by transmit shift register

Bit 0 – SENDB Send Break Control(1)

Value	Description
1	Output Break upon UxTXB write. Written byte follows Break. Bit is cleared by hardware.
0	Break transmission completed or disabled

Note:

1. This bit is read-only in LIN, DMX, and DALI modes.

34.20.3 UxCON2

Name: UxCON2

UART Control Register 2

Bit	7	6	5	4	3	2	1	0
	RUNOVF	RXPOL	STP[1:0]		C0EN	TXPOL	FLO[1:0]	
Acccss	R/W	R/W/HC	R/W	R/W	R/W	R/W	R/W	R/W
Reset	0	0	0	0	0	0	0	0

Bit 7 – RUNOVF Run During Overflow Control

Value	Description
1	RX input shifter continues to synchronize with Start bits after overflow condition
0	RX input shifter stops all activity on receiver overflow condition

Bit 6 – RXPOL Receive Polarity Control

Value	Description
1	Invert RX polarity, Idle state is low
0	RX polarity is not inverted, Idle state is high

Bits 5:4 – STP[1:0] Stop Bit Mode Control(1)

Value	Description
11	Transmit 2 Stop bits, receiver verifies first Stop bit
10	Transmit 2 Stop bits, receiver verifies first and second Stop bits
01	Transmit 1.5 Stop bits, receiver verifies first Stop bit
00	Transmit 1 Stop bit, receiver verifies first Stop bit

Bit 3 – C0EN Checksum Mode Select(2)

Value	Condition	Description
1	MODE = LIN	Enhanced LIN checksum includes PID in sum
0	MODE = LIN	Legacy LIN checksum does not include PID in sum
1	MODE = not LIN	Checksum is the sum of all TX and RX characters
0	MODE = not LIN	Checksum is disabled

Bit 2 – TXPOL Transmit Control Polarity(1)

Value	Description
1	Output data is inverted, TX output is low in Idle state
0	Output data is not inverted, TX output is high in Idle state

Bits 1:0 – FLO[1:0] Handshake Flow Control

Value	Description
11	Reserved
10	$\overline{\text{RTS}}$/$\overline{\text{CTS}}$ and TXDE Hardware flow control
01	XON/XOFF Software flow control
00	Flow control is off

Notes:

1. All modes transmit selected number of Stop bits.
2. Full-featured UARTs only.

34.20.4 UxERRIR

Name: UxERRIR

UART Error Interrupt Flag Register

Bit	7	6	5	4	3	2	1	0
	TXMTIF	PERIF	ABDOVF	CERIF	FERIF	RXBKIF	RXFOIF	TXCIF
Acccss	R/S/C	R/W/HC	R/W/S	R/W/S	R/S/C	R/W/S	R/W/S	R/W/S
Reset	1	0	0	0	0	0	0	0

Bit 7 – TXMTIF Transmit Shift Register Empty Interrupt Flag

Value	Description
1	Transmit shift register is empty (Set at end of Stop bits)
0	Transmit shift register is actively shifting data

Bit 6 – PERIF Parity Error Interrupt Flag

Value	Condition	Description
1	MODE = LIN or Parity	Unread byte at top of input FIFO has parity error
0	MODE = LIN or Parity	Unread byte at top of input FIFO does not have parity error
1	MODE = DALI Device	Unread byte at top of input FIFO received as Forward Frame
0	MODE = DALI Device	Unread byte at top of input FIFO received as Back Frame
1	MODE = Address	Unread byte at top of input FIFO received as address
0	MODE = Address	Unread byte at top of input FIFO received as data
x	MODE = All others	Not used

Bit 5 – ABDOVF Auto-baud Detect Overflow Interrupt Flag

Value	Condition	Description
1	MODE = DALI	Start bit measurement overflowed counter
0	MODE = DALI	No overflow during Start bit measurement
1	MODE = All others	Baud Rate Generator overflowed during the auto-detection sequence
0	MODE = All others	Baud Rate Generator has not overflowed

Bit 4 – CERIF Checksum Error Interrupt Flag

Value	Condition	Description
1	MODE = LIN	Checksum error
0	MODE = LIN	No checksum error
x	MODE = not LIN	Not used

Bit 3 – FERIF Framing Error Interrupt Flag

Value	Description
1	Unread byte at top of input FIFO has framing error
0	Unread byte at top of input FIFO does not have framing error

Bit 2 – RXBKIF Break Reception Interrupt Flag

Value	Description
1	Break detected
0	No break detected

Bit 1 – RXFOIF Receive FIFO Overflow Interrupt Flag

Value	Description
1	Receive FIFO has overflowed
0	Receive FIFO has not overflowed

Bit 0 – TXCIF Transmit Collision Interrupt Flag[(1)]

Value	Description
1	Transmitted word is not equal to the word received during transmission
0	Transmitted word equals the word received during transmission

Note:

1. Full-featured UARTs only.

34.20.5 UxERRIE

Name: UxERRIE

UART Error Interrupt Enable Register

Bit	7	6	5	4	3	2	1	0
	TXMTIE	PERIE	ABDOVE	CERIE	FERIE	RXBKIE	RXFOIE	TXCIE
Acccss	R/W	R/W	R/W	R/W	R/W	R/W	R/W	R/W
Reset	0	0	0	0	0	0	0	0

Bit 7 – TXMTIE Transmit Shift Register Empty Interrupt Enable

Value	Description
1	Interrupt enabled
0	Interrupt not enabled

Bit 6 – PERIE Parity Error Interrupt Enable

Value	Description
1	Interrupt enabled
0	Interrupt not enabled

Bit 5 – ABDOVE Auto-baud Detect Overflow Interrupt Enable

Value	Description
1	Interrupt enabled
0	Interrupt not enabled

Bit 4 – CERIE Checksum Error Interrupt Enable

Value	Description
1	Interrupt enabled
0	Interrupt not enabled

Bit 3 – FERIE Framing Error Interrupt Enable

Value	Description
1	Interrupt enabled
0	Interrupt not enabled

Bit 2 – RXBKIE Break Reception Interrupt Enable

Value	Description
1	Interrupt enabled
0	Interrupt not enabled

Bit 1 – RXFOIE Receive FIFO Overflow Interrupt Enable

Value	Description
1	Interrupt enabled
0	Interrupt not enabled

Bit 0 – TXCIE Transmit Collision Interrupt Enable(1)

Value	Description
1	Interrupt enabled
0	Interrupt not enabled

Note:

1. Full-featured UARTs only.

34.20.6 UxUIR

Name: UxUIR
Address: 0x2B1,0x2C4,0x2D7

UART General Interrupt Flag Register

Bit	7	6	5	4	3	2	1	0
	WUIF	ABDIF				ABDIE		
Access	R/W/S	R/W/S				R/W		
Reset	0	0				0		

Bit 7 – WUIF Wake-up Interrupt

Value	Description
1	Idle to non-idle transition on RX line detected when WUE is set. Also sets UxIF. (WUIF must be cleared by software to clear UxIF)
0	WUE not enabled by software or no transition detected

Bit 6 – ABDIF Auto-baud Detect Interrupt

Value	Description
1	Auto-baud detection complete. Status shown in UxIF when ABDIE is set. (Must be cleared by software)
0	Auto-baud not enabled or auto-baud enabled and auto-baud detection not complete

Bit 2 – ABDIE Auto-baud Detect Interrupt Enable

Value	Description
1	ABDIF will set UxIF bit in PIRx register
0	ABDIF will not set UxIF

34.20.7 UxFIFO

Name: UxFIFO
Address: 0x2B0,0x2C3,0x2D6

UART FIFO Status Register

Bit	7	6	5	4	3	2	1	0
	TXWRE	STPMD	TXBE	TXBF	RXIDL	XON	RXBE	RXBF
Access	R/W/S	R/W	R/W/S/C	R/S/C	R/S/C	S/C	R/W/S/C	R/S/C
Reset	0	0	1	0	1	1	1	0

Bit 7 – TXWRE Transmit Write Error Status (must be cleared by software)

Value	Condition	Description
1	MODE = LIN Master	UxP1L was written when a master process was active
1	MODE = LIN Slave	UxTXB was written when UxP2 = 0 or more than UxP2 bytes have been written to UxTXB since last Break
1	MODE = Address detect	UxP1L was written before the previous data in UxP1L was transferred to TX shifter
1	MODE = All	A new byte was written to UxTXB when the output FIFO was full
0	MODE = All	No error

Bit 6 – STPMD Stop Bit Detection Mode

Value	Condition	Description
1	STP = 11	Assert UxRXIF at end of first Stop bit
1	STP≠ 11	Assert UxRXIF at end of last Stop bit
0	STP = xx	Assert UxRXIF in middle of first Stop bit

Bit 5 – TXBE Transmit Buffer Empty Status

Value	Description
1	Transmit buffer is empty. Setting this bit will clear the transmit buffer and output shift register.
0	Transmit buffer is not empty. Software cannot clear this bit.

Bit 4 – TXBF Transmit Buffer Full Status

Value	Description
1	Transmit buffer is full
0	Transmit buffer is not full

Bit 3 – RXIDL Receive Pin Idle Status

Value	Description
1	Receive pin is in Idle state
0	UART is receiving Start, Stop, Data, Auto-baud, or Break

Bit 2 – XON Software Flow Control Transmit Enable Status

Value	Description
1	Transmitter is enabled
0	Transmitter is disabled

Bit 1 – RXBE Receive Buffer Empty Status

Value	Description
1	Receive buffer is empty. Setting this bit will clear the RX buffer(1)
0	Receive buffer is not empty. Software cannot clear this bit.

Bit 0 – RXBF Receive Buffer Full Status

Value	Description
1	Receive buffer is full

Value	Description
0	Receive buffer is not full

Note:

1. The BSF instruction should not be used to set RXBE because doing so will clear a byte pending in the transmit shift register when the UxTXB register is empty. Instead, use the MOVWF instruction with a '0' in the TXBE bit location.

34.20.8 UxBRG

Name: UxBRG
Address: 0x2AE,0x2C1,0x2D4

UART Baud Rate Generator

Bit	15	14	13	12	11	10	9	8
	BRG[15:8]							
Access	R/W	R/W	R/W	R/W	R/W	R/W	R/W	R/W
Reset	0	0	0	0	0	0	0	0

Bit	7	6	5	4	3	2	1	0
	BRG[7:0]							
Access	R/W	R/W	R/W	R/W	R/W	R/W	R/W	R/W
Reset	0	0	0	0	0	0	0	0

Bits 15:0 – BRG[15:0] Baud Rate Generator Value
The UART Baud Rate equals [Fosc*(1+(BRGS*3)]/[(16*(BRG-1))]

Notes:

1. The individual bytes in this multi-byte register can be accessed with the following register names:
   – UxBRGH: Accesses the high byte BRG[15:8]
   – UxBRGL: Accesses the low byte BRG[7:0]
2. The UxBRG registers should only be written when ON = 0.
3. Maximum BRG value when MODE = '100x and BRGS = 1 is 0x7FFE.
4. Maximum BRG value when MODE = '100x and BRGS = 0 is 0x1FFE.

34.20.9 UxRXB

Name: UxRXB
Address: 0x2A1,0x2B4,0x2C7

UART Receive Register

Bit	7	6	5	4	3	2	1	0
	RXB[7:0]							
Access	R	R	R	R	R	R	R	R
Reset	x	x	x	x	x	x	x	x

Bits 7:0 – RXB[7:0] Top of Receive FIFO

34.20.10 UxTXB

Name: UxTXB
Address: 0x2A3,0x2B6,0x2C9

UART Transmit Register

Bit	7	6	5	4	3	2	1	0
	TXB[7:0]							
Access	R/W	R/W	R/W	R/W	R/W	R/W	R/W	R/W
Reset	0	0	0	0	0	0	0	0

Bits 7:0 – TXB[7:0] Bottom of Transmit FIFO

34.20.11 UxP1

Name: UxP1

UART Parameter 1

Bit	15	14	13	12	11	10	9	8
								P1[8]
Acccss								R/W
Reset								0

Bit	7	6	5	4	3	2	1	0
	P1[7:0]							
Access	R/W	R/W	R/W	R/W	R/W	R/W	R/W	R/W
Reset	0	0	0	0	0	0	0	0

Bit 8 – P1[8] Parameter 1 Most Significant bit
UART mode operating parameter values

Value	Condition	Description
n	MODE = DMX	Most Significant bit of number of bytes to transmit between Start Code and automatic Break generation
n	MODE = DALI Control Device	Most Significant bit of idle time delay after which a Forward Frame is sent. Measured in half-bit periods
n	MODE = DALI Control Gear	Most Significant bit of delay between the end of a Forward Frame and the start of the Back Frame Measured in half-bit periods
x	All other modes/Limited featured UART	Not used

Bits 7:0 – P1[7:0] Parameter 1 Least Significant bits
UART mode operating parameter values

Value	Condition	Description
n	MODE = DMX	Least Significant bits of number of bytes to transmit between Start Code and automatic Break generation
n	MODE = DALI Control Device	Least Significant bits of idle time delay after which a Forward Frame is sent. Measured in half-bit periods
n	MODE = DALI Control Gear	Least Significant bits of delay between the end of a Forward Frame and the start of the Back Frame Measured in half-bit periods
n	MODE = LIN	PID to transmit (Only Least Significant 6 bits used)
n	MODE = Asynchronous Address	Address to transmit (9th transmit bit automatically set to '1')
x	All other modes	Not used

Notes: The individual bytes in this multi-byte register can be accessed with the following register names:

- UxP1H: Accesses the high byte P1[8]
- UxP1L: Accesses the low byte P1[7:0]

34.20.12 UxP2

Name: UxP2

UART Parameter 2

Bit	15	14	13	12	11	10	9	8
								P2[8]
Acccss								R/W
Reset								0

Bit	7	6	5	4	3	2	1	0
	P2[7:0]							
Access	R/W	R/W	R/W	R/W	R/W	R/W	R/W	R/W
Reset	0	0	0	0	0	0	0	0

Bit 8 – P2[8] Parameter 2 Most Significant bit
UART mode operating parameter values

Value	Condition	Description
n	MODE = DMX	Most Significant bit of first address of receive block
n	MODE = DALI	Most Significant bit of number of half-bit periods of idle time in Forward Frame detection threshold
x	All other modes/Limited featured UART	Not used

Bits 7:0 – P2[7:0] Parameter 2 Least Significant bits
UART mode operating parameter values

Value	Condition	Description
n	MODE = DMX	Least Significant bits of first address of receive block
n	MODE = DALI	Least Significant bits of number of half-bit periods of idle time in Forward Frame detection threshold
n	MODE = LIN	Number of data bytes to transmit
n	MODE = Asynchronous Address	Receiver address
x	All other modes	Not used

Notes: The individual bytes in this multi-byte register can be accessed with the following register names:

- UxP2H: Accesses the high byte P2[8]
- UxP2L: Accesses the low byte P2[7:0]

34.20.13 UxP3

Name: UxP3

UART Parameter 3

Bit	15	14	13	12	11	10	9	8
								P3[8]
Acccss								R/W
Reset								0

Bit	7	6	5	4	3	2	1	0
	P3[7:0]							
Access	R/W	R/W	R/W	R/W	R/W	R/W	R/W	R/W
Reset	0	0	0	0	0	0	0	0

Bit 8 – P3[8] Parameter 3 Most Significant bit
UART mode operating parameter values

Value	Condition	Description
n	MODE = DMX	Most Significant bit of last address of receive block
x	All other modes/Limited featured UART	Not used

Bits 7:0 – P3[7:0] Parameter 3 Least Significant bits
UART mode operating parameter values

Value	Condition	Description
n	MODE = DMX	Least Significant bits of last address of receive block
n	MODE = LIN Slave	Number of data bytes to receive
n	MODE = Asynchronous Address	Receiver address mask. Received address is XOR'd with UxP2L then AND'd with UxP3L Match occurs when result is zero
x	All other modes	Not used

Notes: The individual bytes in this multi-byte register can be accessed with the following register names:

- UxP3H: Accesses the high byte P3[8]
- UxP3L: Accesses the low byte P3[7:0]

34.20.14 UxTXCHK

Name: UxTXCHK
Address: 0x02A4

UART Transmit Checksum Result Register

Bit	7	6	5	4	3	2	1	0
	TXCHK[7:0]							
Access	R/W	R/W	R/W	R/W	R/W	R/W	R/W	R/W
Reset	0	0	0	0	0	0	0	0

Bits 7:0 – TXCHK[7:0] Transmit Checksum Value

Value	Condition	Description
n	MODE = LIN and C0EN = 1	Sum of all transmitted bytes including PID
n	MODE = LIN and C0EN = 0	Sum of all transmitted bytes except PID
n	MODE = All others and C0EN = 1	Sum of all transmitted bytes since last clear
x	MODE = All others and C0EN = 0	Not used

34.20.15 UxRXCHK

Name: UxRXCHK
Address: 0x02A2

UART Receive Checksum Result Register

Bit	7	6	5	4	3	2	1	0
	RXCHK[7:0]							
Access	R/W	R/W	R/W	R/W	R/W	R/W	R/W	R/W
Reset	0	0	0	0	0	0	0	0

Bits 7:0 – RXCHK[7:0] Receive Checksum Value

Value	Condition	Description
n	MODE = LIN and C0EN = 1	Sum of all received bytes including PID
n	MODE = LIN and C0EN = 0	Sum of all received bytes except PID
n	MODE = All others and C0EN = 1	Sum of all received bytes since last clear
x	MODE = All others and C0EN = 0	Not used

34.21 Register Summary - UART

Address	Name	Bit Pos.	7	6	5	4	3	2	1	0
0x00 ... 0x02A0	Reserved									
0x02A1	U1RXB	7:0	RXB[7:0]							
0x02A2	U1RXCHK	7:0	RXCHK[7:0]							
0x02A3	U1TXB	7:0	TXB[7:0]							
0x02A4	U1TXCHK	7:0	TXCHK[7:0]							
0x02A5	U1P1	7:0	P1[7:0]							
		15:8								P1[8]
0x02A7	U1P2	7:0	P2[7:0]							
		15:8								P2[8]
0x02A9	U1P3	7:0	P3[7:0]							
		15:8								P3[8]
0x02AB	U1CON0	7:0	BRGS	ABDEN	TXEN	RXEN	MODE[3:0]			
0x02AC	U1CON1	7:0	ON			WUE	RXBIMD		BRKOVR	SENDB
0x02AD	U1CON2	7:0	RUNOVF	RXPOL	STP[1:0]		C0EN	TXPOL	FLO[1:0]	
0x02AE	U1BRG	7:0	BRG[7:0]							
		15:8	BRG[15:8]							
0x02B0	U1FIFO	7:0	TXWRE	STPMD	TXBE	TXBF	RXIDL	XON	RXBE	RXBF
0x02B1	U1UIR	7:0	WUIF	ABDIF				ABDIE		
0x02B2	U1ERRIR	7:0	TXMTIF	PERIF	ABDOVF	CERIF	FERIF	RXBKIF	RXFOIF	TXCIF
0x02B3	U1ERRIF	7:0	TXMTIF	PERIF	ABDOVF	CERIF	FERIF	RXBKIF	RXFOIF	TXCIF
0x02B4	U2RXB	7:0	RXB[7:0]							
0x02B5	Reserved									
0x02B6	U2TXB	7:0	TXB[7:0]							
0x02B7	Reserved									
0x02B8	U2P1	7:0	P1[7:0]							
		15:8								
0x02BA	U2P2	7:0	P2[7:0]							
		15:8								
0x02BC	U2P3	7:0	P3[7:0]							
		15:8								
0x02BE	U2CON0	7:0	BRGS	ABDEN	TXEN	RXEN	MODE[3:0]			
0x02BF	U2CON1	7:0	ON			WUE	RXBIMD		BRKOVR	SENDB
0x02C0	U2CON2	7:0	RUNOVF	RXPOL	STP[1:0]			TXPOL	FLO[1:0]	
0x02C1	U2BRG	7:0	BRG[7:0]							
		15:8	BRG[15:8]							
0x02C3	U2FIFO	7:0	TXWRE	STPMD	TXBE	TXBF	RXIDL	XON	RXBE	RXBF
0x02C4	U2UIR	7:0	WUIF	ABDIF				ABDIE		
0x02C5	U2ERRIR	7:0	TXMTIF	PERIF	ABDOVF	CERIF	FERIF	RXBKIF	RXFOIF	
0x02C6	U2ERRIE	7:0	TXMTIE	PERIE	ABDOVE	CERIE	FERIE	RXBKIE	RXFOIE	
0x02C7	U3RXB	7:0	RXB[7:0]							
0x02C8	Reserved									
0x02C9	U3TXB	7:0	TXB[7:0]							
0x02CA	Reserved									
0x02CB	U3P1	7:0	P1[7:0]							
		15:8								
0x02CD	U3P2	7:0	P2[7:0]							
		15:8								
0x02CF	U3P3	7:0	P3[7:0]							
		15:8								
0x02D1	U3CON0	7:0	BRGS	ABDEN	TXEN	RXEN	MODE[3:0]			
0x02D2	U3CON1	7:0	ON			WUE	RXBIMD		BRKOVR	SENDB
0x02D3	U3CON2	7:0	RUNOVF	RXPOL	STP[1:0]			TXPOL	FLO[1:0]	
0x02D4	U3BRG	7:0	BRG[7:0]							
		15:8	BRG[15:8]							

.....continued

Address	Name	Bit Pos.	7	6	5	4	3	2	1	0
0x02D6	U3FIFO	7:0	TXWRE	STPMD	TXBE	TXBF	RXIDL	XON	RXBE	RXBF
0x02D7	U3UIR	7:0	WUIF	ABDIF				ABDIE		
0x02D8	U3ERRIR	7:0	TXMTIF	PERIF	ABDOVF	CERIF	FERIF	RXBKIF	RXFOIF	
0x02D9	U3ERRIE	7:0	TXMTIE	PERIE	ABDOVE	CERIE	FERIE	RXBKIE	RXFOIE	

35. SPI - Serial Peripheral Interface Module

The Serial Peripheral Interface (SPI) module is a synchronous serial data communication bus that operates in Full-Duplex mode. Devices communicate in a master/slave environment where the master device initiates the communication. A slave device is typically controlled through a chip select known as Slave Select. Some examples of slave devices include serial EEPROMs, shift registers, display drivers, A/D converters, and other PIC® devices with SPI capabilities.

The SPI bus specifies four signal connections:

- Serial Clock (SCK)
- Serial Data Out (SDO)
- Serial Data In (SDI)
- Slave Select (SS)

The following figure shows the block diagram of the SPI module.

Figure 35-1. SPI Module Simplified Block Diagram

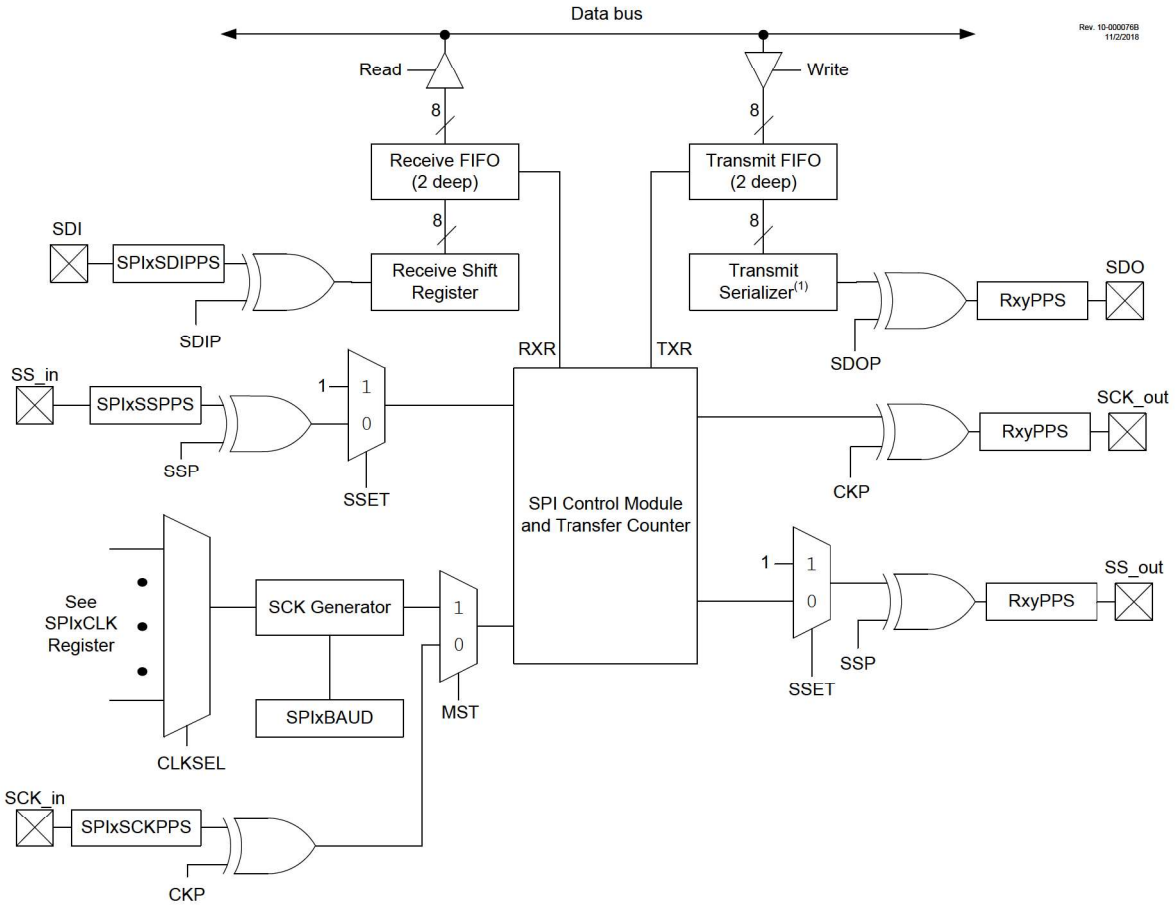

Note 1: If the transmit FIFO is empty and TXR=1, the previous value of the receive shift register will be sent to the transmit serializer.

The SPI transmit output (SDO_out) is available to the remappable PPS SDO pin and internally to the select peripherals.

The SPI bus typically operates with a single master device and one or more slave devices. When multiple slave devices are used, an independent Slave Select connection is required from the master device to each slave device.

The master selects only one slave at a time. Most slave devices have tri-state outputs so their output signal appears disconnected from the bus when they are not selected.

Transmissions typically involve Shift registers, eight bits in size, one in the master and one in the slave. With either the master or the slave device, data is always shifted out one bit at a time, with the Most Significant bit (MSb) shifted out first. At the same time, a new bit is shifted into the device. Unlike older Microchip devices, the SPI module on this device contains one register for incoming data and another register for outgoing data. Both registers also have multi-byte FIFO buffers and allow for DMA bus connections.

The figure below shows a typical connection between two devices configured as master and slave devices.

Figure 35-2. SPI Master/Slave Connection with FIFOs

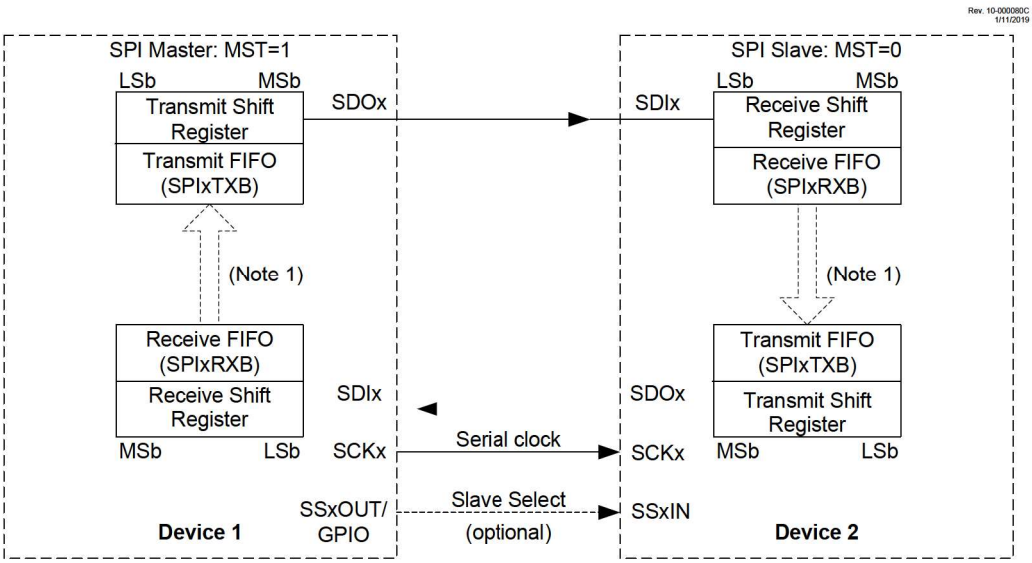

Note 1: In some modes, if the Transmit FIFO is empty, the most recently received byte of data will be transmitted.
2: This diagram assumes that the LSBF bit is cleared (communications are MSb-first). When LSBF is set, the communications will be LSb-first.

Data is shifted out of the transmit FIFO on the programmed clock edge and into the receive Shift register on the opposite edge of the clock.

The master device transmits information on its SDO output pin which is connected to, and received by, the slave's SDI input pin. The slave device transmits information on its SDO output pin, which is connected to, and received by, the master's SDI input pin.

The master device sends out the clock signal. Both the master and the slave devices should be configured for the same clock phase and clock polarity.

During each SPI clock cycle, a full-duplex data transmission occurs. This means that while the master device is sending out the MSb from its output register (on its SDO pin) and the slave device is reading this bit and saving it as the LSb of its input register. The slave device is also sending out the MSb from its Shift register (on its SDO pin) and the master device is reading this bit and saving it as the LSb of its input register.

After eight bits have been shifted out, the master and slave have exchanged register values and stored the incoming data into the receiver FIFOs.

If there is more data to exchange, the registers are loaded with new data and the process repeats.

Whether the data is meaningful or not (dummy data) depends on the application software. This leads to three scenarios for data transmission:

- Master sends useful data and slave sends dummy data
- Master sends useful data and slave sends useful data

- Master sends dummy data and slave sends useful data

In this SPI module, dummy data may be sent without software involvement. Dummy transmit data is automatically handled by clearing the TXR bit and receive data is ignored by clearing the RXR bit. See Table 35-1 as well as Master Mode and Slave Mode for further TXR/RXR setting details.

This SPI module can send transmissions of any number of bits, and can send information in segments of varying size (from 1-8 bits in width). As such, transmissions may involve any number of clock cycles, depending on the amount of data to be transmitted.

When there is no more data to be transmitted, the master stops sending the clock signal and deselects the slave. Every slave device connected to the bus that has not been selected through its Slave Select line disregards the clock and transmission signals and does not transmit out any data of its own.

35.1 SPI Controls

The following registers control the SPI operation:

- SPI Interrupt Flag Register (SPIxINTF)
- SPI Interrupt Enable Register (SPIxINTE)
- SPI Byte Count High and Low Registers (SPIxTCNTH/L)
- SPI Bit Count Register (SPIxTWIDTH)
- SPI Baud Rate Register (SPIxBAUD)
- SPI Control Register 0 (SPIxCON0)
- SPI Control Register 1 (SPIxCON1)
- SPI Control Register 2 (SPIxCON2)
- SPI FIFO Status Register (SPIxSTATUS)
- SPI Receiver Buffer Register (SPIxRXB)
- SPI Transmit Buffer Register (SPIxTXB)
- SPI Clock Select Register (SPIxCLK)

SPIxCON0, SPIxCON1, and SPIxCON2 are control registers for the SPI module.

SPIxSTATUS reflects the status of both the SPI module and the receive and transmit FIFOs.

SPIxBAUD and SPIxCLK control the Baud Rate Generator (BRG) of the SPI module when in Master mode. The SPIxCLK selects the clock source that is used by the BRG. The SPIxBAUD configures the clock divider used on that clock source. More information on the BRG is available in Master Mode SPI Clock Configuration.

SPIxTxB and SPIxRxB are the Transmit and Receive Buffer registers used to send and receive data on the SPI bus. The Transmit and Receive Buffer registers offer indirect access to Shift registers that are used for shifting the data in and out. Both registers access the multi-byte FIFOs, allowing for multiple transmissions or receptions to be stored between software transfers of the data.

The SPIxTCNTH:L register pair either count or control the number of bits or bytes in a data transfer. When BMODE = 1, the SPIxTCNT value signifies bytes and the SPIxTWIDTH value signifies the number of bits in a byte. When BMODE = 0, the SPIxTCNT value is concatenated with the SPIxTWIDTH register to signify bits. In Master Receive Only mode (TXR = 0 and RXR = 1), the data transfer is initiated by writing SPIxTCNT with the desired bit or byte value to transfer. In Master Transmit mode (TXR = 1), the data transfer is initiated by writing the SPIxTxB register, in which case the SPIxTCNT is a down counter for the bits or bytes transferred.

The SPIxINTF and SPIxINTE are the flags and enables, respectively, for SPI specific interrupts. They are tied to the SPIxIF flag and SPIxIE enable bit in the PIR and PIE registers, which is triggered when any interrupt contained in the SPIxINTF/SPIxINTE registers is triggered. The PIR/PIE registers also contain SPIxTXIF/SPIxTXIE bits, which are the interrupt flag and enable for the SPI Transmit Interrupt, as well as the SPIxRXIF/SPIxRXIE bits, which are the interrupt flag and enable bit for the SPI receive interrupt.

35.2 SPI Operation

When initializing the SPI, several options need to be specified. This is done by programming the appropriate control bits of the SPIxCON0, SPIxCON1, and SPIxCON2 registers. These control bits allow the following to be configured:

- Master mode (SCK is the clock output)
- Slave mode (SCK is the clock input)
- Clock Polarity (Idle state of SCK)
- Input, Output, and Slave Select Polarity
- Data Input Sample Phase (middle or end of data output time)
- Clock Edge (output data on first/second edge of SCK)
- Clock Rate (Master mode only)
- Slave Select mode (Master or Slave mode)
- MSB-First or LSB-First
- Receive/Transmit modes:
  - Full-Duplex
  - Receive Only (receive without transmit)
  - Transmit Only (transmit without receive)
- Transfer Counter mode (only available in Transmit Only mode)

35.2.1 Enabling and Disabling the SPI Module

Setting the EN bit enables the SPI peripheral. However, to reset or reconfigure the SPI mode the EN bit must be cleared.

Setting the EN bit enables the SPI inputs and outputs: SDI, SDO, SCK_out, SCK_in, SS_out, and SS_in. The pins for all of these inputs and outputs are selected by the PPS controls, and thus must have their functions mapped properly to the device pins to function. Refer to the **"PPS - Peripheral Pin Select Module"** chapter for more details.

SS_out and SCK_out must have the pins to which they are assigned set as outputs (TRIS bits must be '0') in order to properly output. Clearing the TRIS bit of the SDO pin will cause the SPI module to always control that pin, but is not necessary for SDO functionality. (see Input and Output Polarity Control)

Configurations selected by the following registers should not be changed while the EN bit is set:

- SPIxBAUD
- SPIxCON1
- SPIxCON0 (with the exception of clearing the EN bit)

Clearing the EN bit aborts any transmissions in progress, disables the setting of interrupt flags by hardware, and resets the FIFO occupancy. (see Transmit and Receive FIFOs)

35.2.2 BUSY Bit

While a data transfer is in progress, the SPI hardware sets the BUSY bit. This bit can be polled by the user to determine the current status of the SPI module, and to know when a communication is complete. The following registers and bits should not be changed by software while the BUSY bit is set:

- SPIxTCNT
- SPIxTWIDTH
- SPIxCON2
- The CLB bit

Important:

1. The BUSY bit is subject to synchronization delay of up to two instruction cycles. The user must wait for it to set after loading the transmit buffer (SPIxTXB register) before using it to determine the status of the SPI module.
2. It is also not recommended to read SPIxTCNT while the BUSY bit is set, as the value in the registers may not be a reliable indicator of the transfer counter. Use the TCZIF bit to accurately determine that the transfer counter has reached zero.

35.2.3 Transmit and Receive FIFOs

The transmission and reception of data from the SPI module is handled by two FIFOs, one for reception and one for transmission. These are addressed by the SFRs, SPIxRXB and SPIxTXB, respectively.

The transmit FIFO is written to by software and is read by the SPI module to shift the data onto the SDO pin. The receive FIFO is written to by the SPI module as it shifts in the data from the SDI pin and is read by software. Setting the CLB bit resets the occupancy for both FIFOs, emptying both buffers. The FIFOs are also reset by clearing the EN bit, thus disabling the SPI module.

Important: The transmit and receive FIFO occupancy refer to the number of bytes that are currently being stored in each FIFO. These values are used in this chapter to illustrate the function of these FIFOs and are not directly accessible through software.

The SPIxRXB register addresses the receive FIFO and is read-only. Reading from this register will read from the first FIFO location that was written to by hardware and decrease the receive FIFO occupancy. If the FIFO is empty, reading from this register will instead return a value of zero and set the RXRE (Receive Buffer Read Error) bit. The RXRE bit must then be cleared in software in order to properly reflect the status of the read error. When the receive FIFO is full, the RXBF bit will be set.

The SPIxTXB register addresses the transmit FIFO and is write-only. Writing to the register will write to the first empty FIFO location and increase the occupancy. If the FIFO is full, writing to this register will not affect the data and will set the TXWE bit. When the transmit FIFO is empty, the TXBE bit will be set.

More details on enabling and disabling the receive and transmit functions is summarized in Table 35-1 and Slave Mode Transmit Options.

35.2.4 LSb vs. MSb-First Operation

Typically, the SPI communication outputs the Most Significant bit first, but some devices or buses may not conform to this standard. In this case, the LSBF bit may be used to alter the order in which bits are shifted out during the data exchange. In both Master and Slave mode, the LSBF bit controls whether data is shifted MSb or LSb first. Clearing the bit (default) configures the data to transfer MSb first, which conforms to traditional SPI operation, while setting the bit configures the data to transfer LSb first.

35.2.5 Input and Output Polarity Control

SPIxCON1 has three bits that control the polarity of the SPI inputs and outputs:

- The SDIP bit controls the polarity of the SDI input
- The SDOP bit controls the polarity of the SDO output
- The SSP bit controls the polarity of both the slave SS input and the master SS output

For all three bits, when the bit is clear, the input or output is active-high, and when the bit is set, the input or output is active-low. When the EN bit is cleared, SS_out and SCK_out both revert to the Inactive state dictated by their polarity bits. The SDO output state, when the EN bit is cleared, is determined by several factors as follows:

- When the associated TRIS bit for the SDO pin is cleared, and the SPI goes idle after a transmission, the SDO output will remain at the last bit level.
- When the associated TRIS bit for the SDO pin is set, its behavior varies in Slave and Master mode:
  - In Slave mode, the SDO pin tri-states when any of the following are true:

- Slave Select is inactive
- EN = 0
- TXR = 0

– In Master mode:
- The SDO pin tri-states when TXR = 0
- When TXR = 1 and the SPI goes idle after a transmission, the SDO output will remain at the last bit level. The SDO pin will revert to the Idle state when EN is cleared.

35.2.6 Transfer Counter

In all Master modes, the transfer counter can be used to determine how many data transfers the SPI will send/receive. The transfer counter is comprised of the SPIxTCNT registers, and is also partially controlled by the SPIxTWIDTH register.

The transfer counter has two primary modes, determined by the BMODE bit. Each mode uses the SPIxTCNT and SPIxTWIDTH registers to determine the number and size of the transfers. In both modes, when the transfer counter reaches zero, the TCZIF interrupt flag is set.

Important:
In all Slave modes and when BMODE = 1 in Master modes, the transfer counter will still decrement as transfers occur and can be used to count the number of messages sent/received, control SS_out, and trigger TCZIF. Also, when BMODE = 1, the SPIxTWIDTH register can be used in Master and Slave modes to determine the size of messages sent and received by the SPI, even if the transfer counter is not being actively used to control the number of messages being sent/received by the SPI module.

35.2.6.1 Total Bit Count Mode (BMODE = 0)

In this mode, SPIxTCNT and SPIxTWIDTH are concatenated to determine the total number of bits to be transferred. These bits will be loaded from/into the transmit/receive FIFOs in 8-bit increments and the transfer counter will be decremented by eight until the total number of remaining bits is less than eight. If there are any remaining bits (SPIxTWIDTH ≠ 0), the transmit FIFO will send out one final message with any extra bits greater than the remainder ignored.

The SPIxTWIDTH is the remaining bit count but the value does not change as it does for the SPIxTCNT value. The receiver will load a final byte into the receiver FIFO, and pad the extra bits with zeros. The LSBF bit determines whether the Most Significant or Least Significant bits of this final byte are ignored or padded. For example, when LSBF = 0 and the final transfer contains only two bits, then if the last byte sent was 0x5F, the RXB of the receiver will contain 0x40 which are the two MSbs of the final byte padded with zeros in the LSbs.

In this mode, the SPI master will only transmit messages when the SPIxTCNT value is greater than zero, regardless of the TXR and RXR settings.

In Master Transmit mode, the transfer starts with the data write to the SPIxTXB register or the count value written to the SPIxTCNTL register, whichever occurs last.

In Master Receive Only mode, the transfer clocks start when the SPIxTCNTL value is written. Transfer clocks are suspended when the receive FIFO is full and resume as the FIFO is read.

35.2.6.2 Variable Transfer Size Mode (BMODE = 1)

In this mode, SPIxTWIDTH specifies the width of every individual piece of the data transfer in bits. SPIxTCNT specifies the number of transfers of this bit length. If SPIxTWIDTH = 0, each piece is a full byte of data. If SPIxTWIDTH ≠ 0, then only that specified number of bits from the transmit FIFO are shifted out, with the unused bits ignored.

Received data is padded with zeros in the unused bit areas when transferred into the receive FIFO. The LSBF bit determines whether the Most Significant or Least Significant bits of the transfers are ignored or padded.

In this mode, the transfer counter being zero only stops messages from being sent or received when in Receive Only mode.

Important:
With BMODE = 1, it is possible for the transfer counter (SPIxTCNT) to decrement below zero, although when in 'Receive Only' Master mode, transfer clocks will cease when the transfer counter reaches zero.

35.2.6.3 Transfer Counter in Slave Mode

In Slave mode, the transfer counter will still decrement as data is shifted in and out of the SPI module, but it will not control data transfers. The BMODE bit along with the transfer counter is used to determine when the device should look for Slave Select faults.

When BMODE = 0, the SSFLT bit will be set if Slave Select transitions from its Active to Inactive state during bytes of data, or if it transitions before the last bit sent during the final byte (if SPIxTWIDTH ≠ 0).

When BMODE = 1, the SSFLT bit will be set if Slave Select transitions from its Active to Inactive state before the final bit of each individual transfer is completed.

Note: SSFLT does not have an associated interrupt, so it should be checked in software. An ideal time to do this is when the End of Slave Select Interrupt (EOSIF) is triggered (see Start of Slave Select and End of Slave Select Interrupts).

35.3 Master Mode

In Master mode, the device controls the SCK line, and as such, initiates data transfers and determines when any slaves broadcast data onto the SPI bus.

Master mode can be configured in four different modes, configured by the TXR and RXR bits:

- Full-Duplex mode
- Receive Only mode
- Transmit Only mode
- Transfer Off mode

The modes are illustrated in the following table:

Table 35-1. Master Mode TXR/RXR Settings

	TXR = 1	TXR = 0
RXR = 1	**Full Duplex mode** BMODE = 1: Transfer when RxFIFO is not full and TxFIFO is not empty BMODE = 0: Transfer when RXFIFO is not full, TXFIFO is not empty, and the Transfer Counter is non- zero	**Receive Only mode** Transfer when RxFIFO is not full and the Transfer Counter is non-zero Transmitted data is either the top of the FIFO or the most recently received data
RXR = 0	**Transmit Only mode** BMODE = 1: Transfer when TxFIFO is not empty BMODE = 0: Transfer when TXFIFO is not empty and the Transfer Counter is non-zero Received data is not stored	No Transfers

35.3.1 Full-Duplex Mode

When both TXR and RXR are set, the SPI master is in Full-Duplex mode. In this mode, data transfer triggering is affected by the BMODE bit.

When BMODE = 1, data transfers will occur whenever both the receive FIFO is not full and there is data present in the transmit FIFO. In practice, as long as the receive FIFO is not full, data will be transmitted/received as soon as the SPIxTXB register is written to, matching the functionality of SPI (MSSP) modules on older 8-bit Microchip devices. The SPIxTCNT will decrement with each transfer. However, when SPIxTCNT is zero the next transfer is not inhibited

and the corresponding SPIxTCNT decrement will cause the count to roll over to the maximum value. The following figure shows an example of a communication using this mode.

Figure 35-3. SPI Master Operation - Data Exchange RXR = 1, TXR = 1

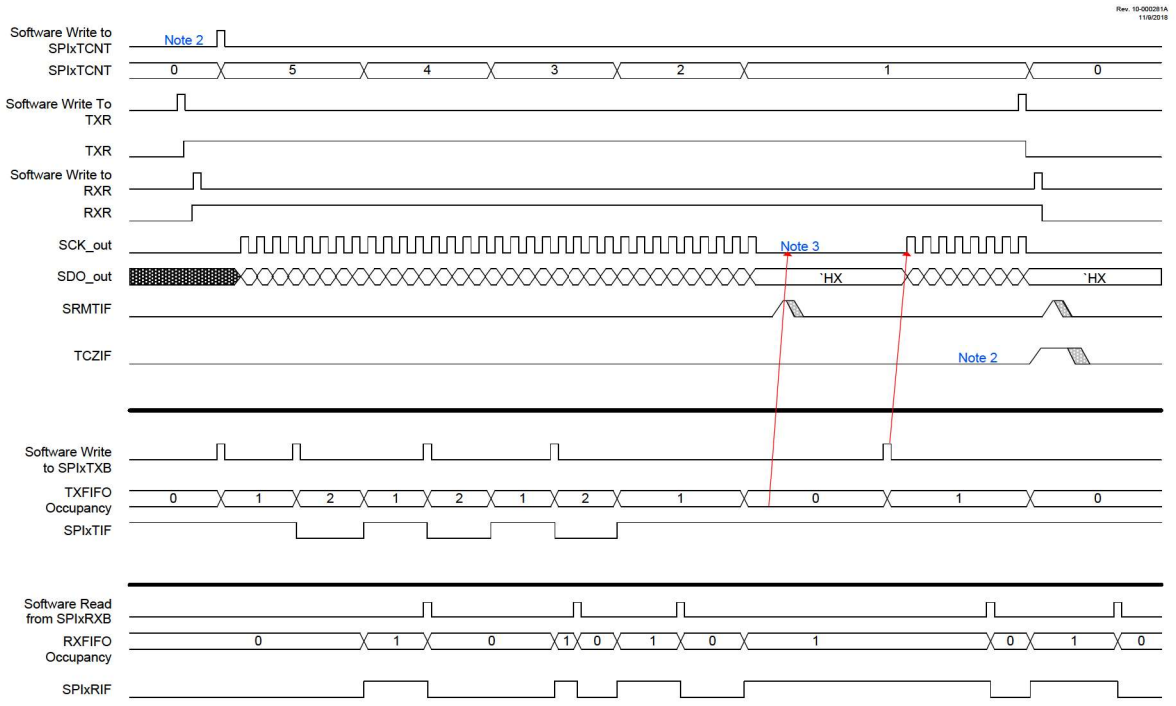

Note: 1. SS(out) is not shown on this diagram
2. SPIxTCNT write is optional when TXR/RXR = 1/1 and BMODE=1. If BMODE=0, a write to SPIxTCNT is required to start transmission; TCZIF signals the transition of SPIxTCNT from 1 to 0
3. Transmission gap occurs while waiting for transmitter data.

When BMODE = 0, the transfer counter (SPIxTCNT) must also be written to before transfers will occur. Transfers will cease when the transfer counter reaches '0'. For example, if SPIxTXB is written twice and then SPIxTCNTL is written with '3' then the transfer will start with the SPIxTCNTL write. The two bytes in the TXFIFO will be sent after which the transfer will suspend until the third and last byte is written to SPIxTXB.

35.3.2 Transmit Only Mode

When TXR is set and RXR is clear, the SPI master is in Transmit Only mode. In this mode, data transfer triggering is affected by the BMODE bit.

When BMODE = 1, data transfers will occur whenever the transmit FIFO is not empty. Data will be transmitted as soon as the SPIxTXB register is written to, matching the functionality of the SPI (MSSP) modules on previous 8-bit devices. The SPIxTCNT will decrement with each transfer. However, when SPIxTCNT is zero the next transfer is not inhibited and the corresponding SPIxTCNT decrement will cause the count to roll over to the maximum value. Any data received in this mode is not stored in the receive FIFO. The following figure shows an example of sending a command and then sending a byte of data, using this mode.

Figure 35-4. SPI Master Operation - Command+Write Data TXR = 1, RXR = 0

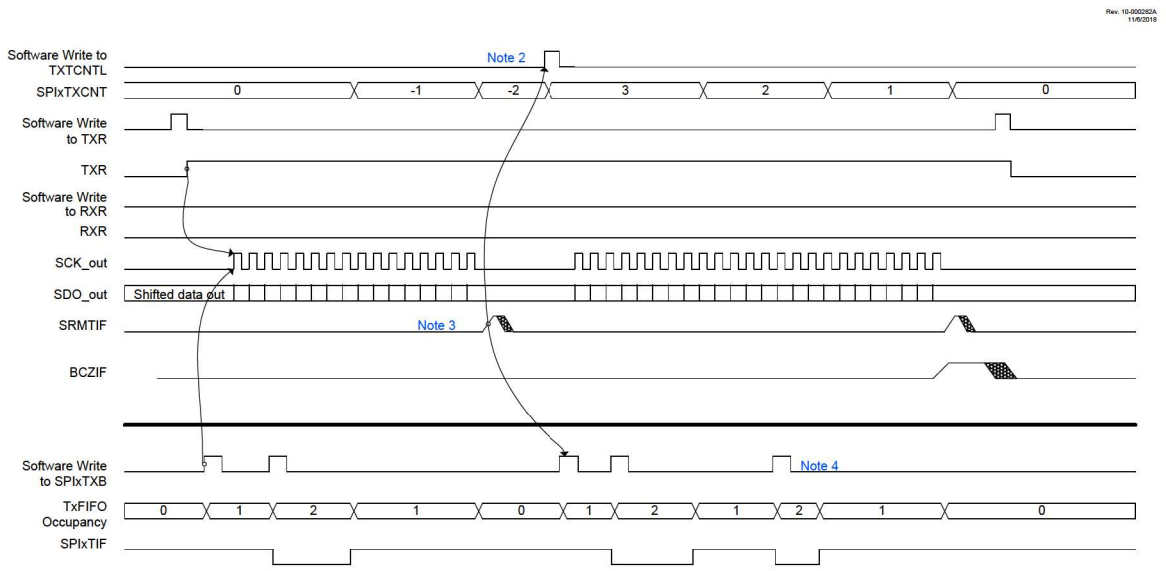

Note: 1. SS_out is not shown
2. The byte counter is optional when TXR/RXR = 1/0;
3. After the command bytes, wait for SRMTIF before loading SPIxTXB otherwise the command data would decrement SPIxTXCNT. Alternatively, load SPIxTXCNT= 5 and count the command bytes also; TCZIF signals the end of the transmission.
4. Transmit data interrupt handler (or DMA) must write only the bytes necessary; the byte counter is not available as an indicator.
5. Reading the SPIxRXB is not required because RXR = 0.

When BMODE = 0, the transfer counter (SPIxTCNT) must also be written to before transfers will occur, and transfers will cease when the transfer counter reaches '0'.

For example, if SPIxTXB is written twice and then SPIxTCNTL is written with '3', the transfer will start with the SPIxTCNTL write. The two bytes in the TXFIFO will be sent after which the transfer will suspend until the third and last byte is written to SPIxTXB.

35.3.3 Receive Only Mode

When RXR is set and TXR is clear, the SPI master is in Receive Only mode. In this mode, data transfers when the receive FIFO is not full and the transfer counter is non-zero. In this mode, writing a value to SPIxTCNTL will start the clocks for transfer. The clocks will suspend while the receive FIFO is full and cease when the SPIxTCNT reaches zero (see Transfer Counter). If there is any data in the transmit FIFO, the first data written to SPIxTXB will be transmitted on each data exchange, although the transmit FIFO occupancy will not change, meaning that the same message will be sent on each transmission. If there is no data in the transmit FIFO, the most recently received data will be transmitted. The following figure shows an example of sending a command using the Transmit Only mode and then receiving a byte of data using the Receive Only mode.

Important: When operating in Receive only mode and the size of every SPI transaction is less than 8 bits, it is recommended to operate in BMODE = 1 mode. The size of the packet can be configured using the SPIxTWIDTH register.

Figure 35-5. SPI Master Operation, Command+Read Data, TXR = 0, RXR = 1

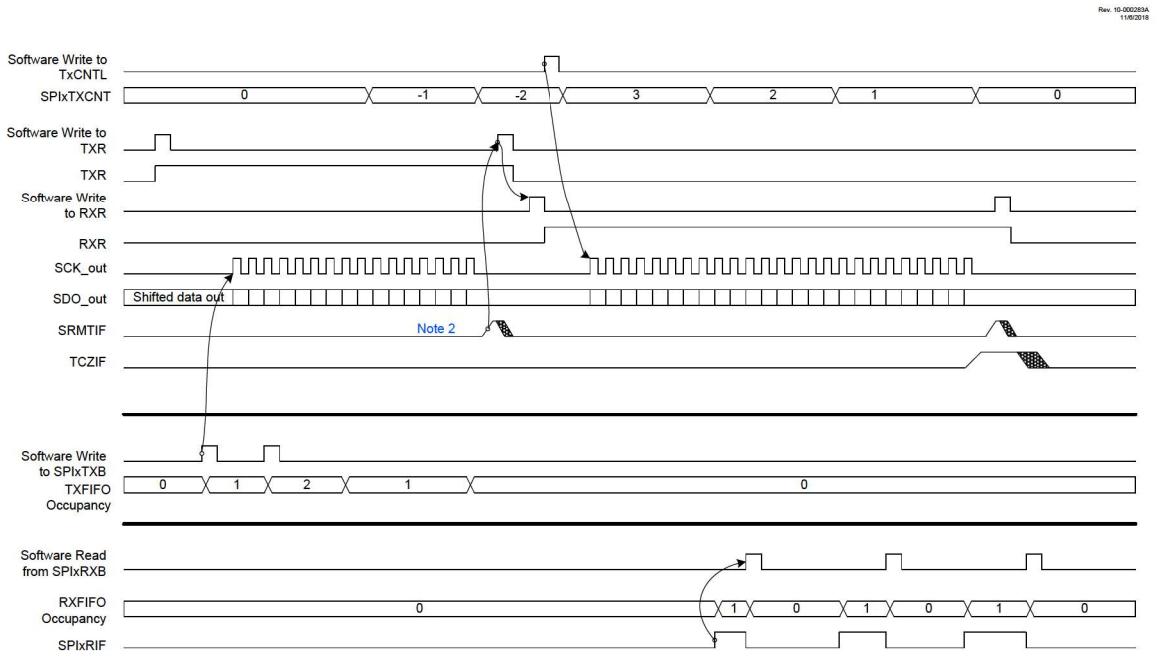

Note: 1. SS_out is not shown
2. Software must wait for shift-register empty (SRMTIF) before changing TXR, RXR, SPIxTCNT and SPIxTWIDTH controls. This is not considered an imposition in this case, because the slave probably needs time to load output data.

35.3.4 Transfer Off Mode

When both TXR and RXR are cleared, the SPI master is in Transfer Off mode. In this mode, SCK will not toggle and no data is exchanged. However, writes to SPIxTXB will be transferred to the transmit FIFO which will then be transmitted when the TXR bit is set.

35.3.5 Master Mode Slave Select Control

35.3.5.1 Hardware Slave Select Control

The SPI module allows for direct hardware control of a Slave Select output. The Slave Select output (SS_out) is controlled both directly, through the SSET bit, and indirectly by the hardware while the transfer counter is non-zero (see Transfer Counter). The SS_out pin is selected with the PPS controls. The SS_out polarity is controlled by the SSP bit.

Setting the SSET bit will assert SS_out. Clearing the SSET bit will leave SS_out to be controlled by the transfer counter. When the transfer counter is loaded, the SPI module will automatically assert SS_out. When the transfer counter decrements to zero, the SPI module will deassert SS_out either one baud period after the final SCK pulse of the final transfer (when CKE/SMP = 0/1) or one half baud period otherwise, as shown in the following figure.

Figure 35-6. SPI Master SS Operation - CKE = 0, BMODE = 1, TWIDTH = 0, SSP= 0

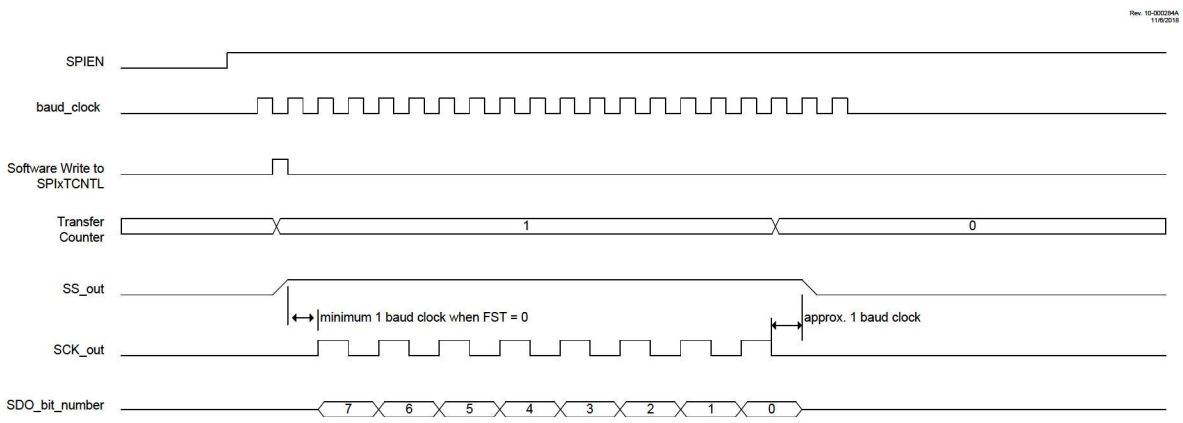

Note: 1. *SDO bit number* illustrates the transmitted bit number, and is not intended to imply SDO_out tristate operation.
2. Assumes SPIxTXB holds data when SPIxTCNTL is written.

35.3.5.2 Software Slave Select Control

Slave Select can be controlled through software via a general purpose I/O pin. In this case, ensure that the desired pin is configured as a general purpose output with the PPS and TRIS controls. In this case, SSET will not affect the Slave Select, the Transfer Counter will not automatically control the Slave Select output, and all setting and clearing of the Slave Select output line must be directly controlled by software.

35.3.6 Master Mode SPI Clock Configuration

35.3.6.1 SPI Clock Selection

The clock source for SPI Master modes is selected by the SPIxCLK register.

The SPIxBAUD register allows for dividing this clock. The frequency of the SCK output is defined by the following equation:

Equation 35-1. SCK Output Frequency

$$F_{BAUD} = \frac{F_{CSEL}}{2 \times (BAUD + 1)}$$

where F_{BAUD} is the baud rate frequency output on the SCK pin, F_{CSEL} is the frequency of the input clock selected by the SPIxCLK register, and BAUD is the value contained in the SPIxBAUD register.

35.3.6.2 Clock and Data Change Alignment

The CKP, CKE, and SMP bits control the relationship between the SCK clock output, SDO output data changes, and SDI input data sampling. The bit functions are as follows:

- CKP controls SCK output polarity
- CKE controls SDO output change relative to the SCK clock
- SMP controls SDI input sampling relative to the clock edges

The CKE bit, when set, inverts the low Idle state of the SCK output to a high Idle state.

The following figures illustrate the eight possible combinations of the CKP, CKE, and SMP bit selections.

Important: All timing diagrams assume the LSBF bit is cleared.

Figure 35-7. Clocking Detail - Master Mode, CKE = 0, SMP = 0

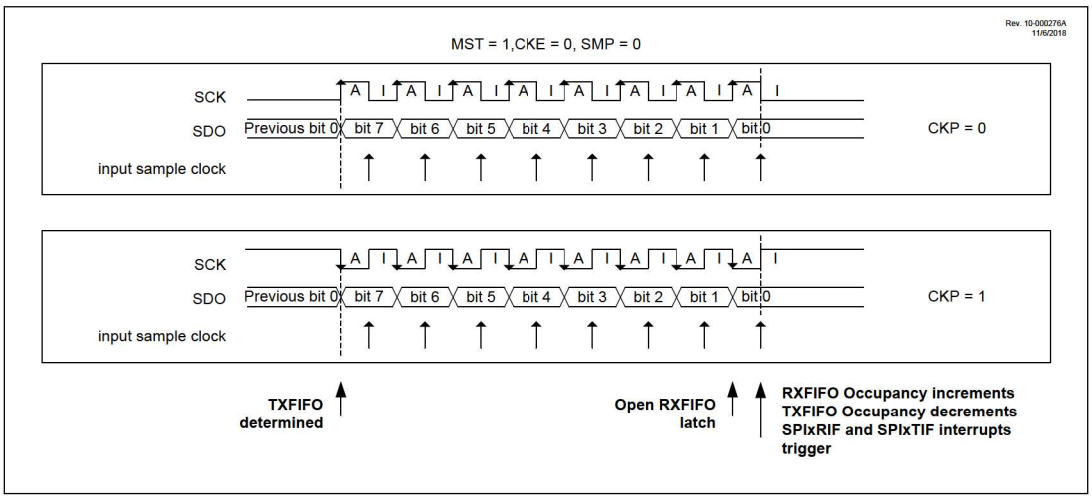

Figure 35-8. Clocking Detail - Master Mode, CKE = 1, SMP = 1

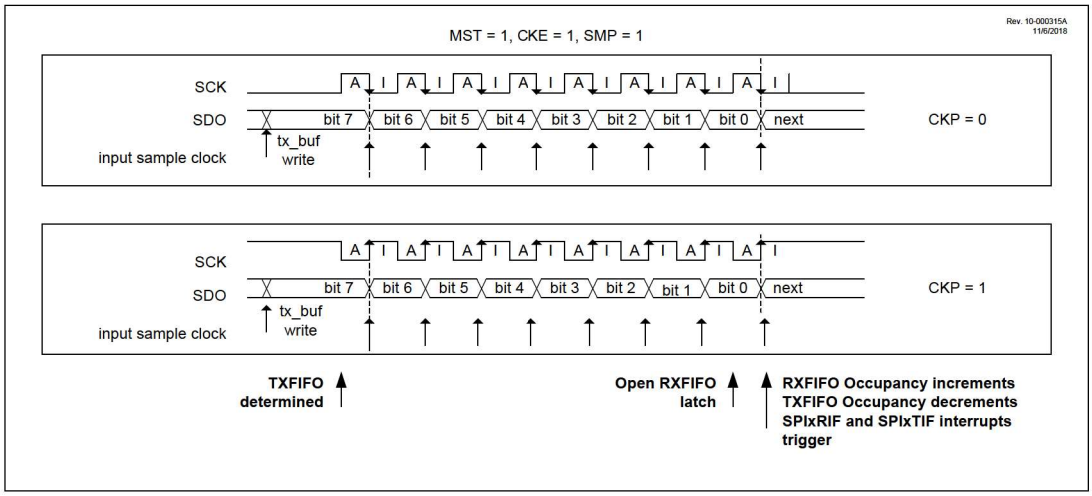

Figure 35-9. Clocking Detail - Master Mode, CKE = 0, SMP = 1

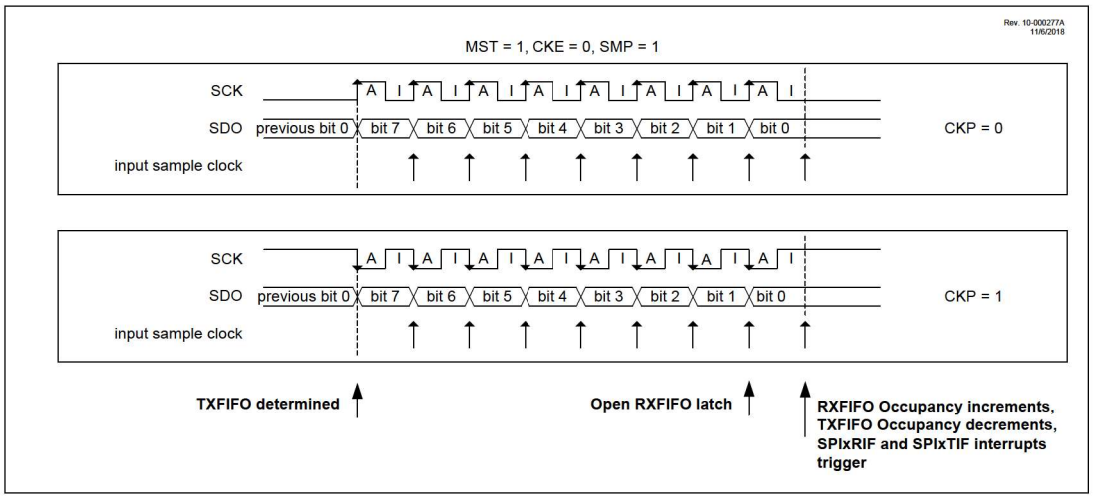

Figure 35-10. Clocking Detail - Master Mode, CKE = 1, SMP = 0

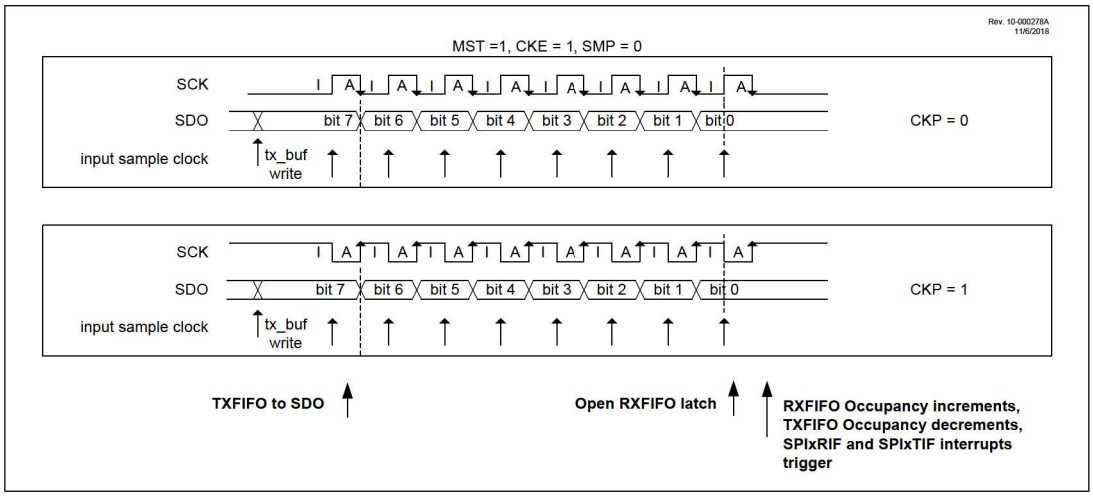

35.3.6.3 SCK Start-up Delay

When starting an SPI data exchange, the master device asserts the SS output, by either setting the SSET bit or loading the TCNT value, and then triggers the module to send data by writing SPIxTXB. These data triggers are synchronized to the clock selected by the SPIxCLK register before the first SCK pulse appears, usually requiring one or two clock periods of the selected SPI source clock.

The SPI module includes additional synchronization delays on SCK generation specifically designed to ensure that the Slave Select output timing is correct, without requiring precision software timing loops. By default this synchronization delay is ½ baud period.

When the value of the SPIxBAUD register is a small number (indicating higher SCK frequencies), the code execution delay between asserting SS and writing SPIxTXB is relatively long compared to the added synchronization delay before the first SCK edge. With larger values of SPIxBAUD (indicating lower SCK frequencies), the code execution delay is much smaller relative to the synchronization delay. Therefore, the first SCK edge after SS is asserted will be closer to the synchronization delay.

Setting the FST bit removes the synchronization delay, allowing systems with low SPIxBAUD values (and thus, long synchronization delays) to forgo this extra delay in which case the time between the SS assertion and the first SCK edge depends entirely on the code execution delay.

35.4 Slave Mode

35.4.1 Slave Mode Transmit Options

The SDO output of the SPI module in Slave mode is controlled by the following:

- TXR bit
- TRIS bit associated with the SDO pin
- Slave Select input
- Current state of the transmit FIFO

This control is summarized in the following table where TRISxn refers to the bit in the TRIS register corresponding to the pin that SDO has been assigned with PPS, TXR is the Transmit Data Required Control bit, SS is the state of the Slave Select input, and TXBE is the transmit FIFO Buffer Empty bit.

Table 35-2. Slave Mode Transmit

TRISxn(1)	TXR	SS	TXBE	SDO State
0	0	FALSE	0	Drives state determined by LATxn(2)
0	0	FALSE	1	Drives state determined by LATxn(2)
0	0	TRUE	0	Outputs the oldest byte in the transmit FIFO Does not remove data from the transmit FIFO
0	0	TRUE	1	Outputs the most recently received byte
0	1	FALSE	0	Drives state determined by LATxn(2)
0	1	FALSE	1	Drives state determined by LATxn(2)
0	1	TRUE	0	Outputs the oldest byte in the transmit FIFO Removes transmitted byte from the transmit FIFO Decrements occupancy of transmit FIFO
0	1	TRUE	1	Outputs the most recently received byte Sets the TXUIF bit
1	0	FALSE	0	Tri-stated
1	0	FALSE	1	Tri-stated
1	0	TRUE	0	Tri-stated
1	0	TRUE	1	Tri-stated
1	1	FALSE	0	Tri-stated
1	1	FALSE	1	Tri-stated
1	1	TRUE	0	Outputs the oldest byte in the transmit FIFO Removes transmitted byte from the transmit FIFO Decrements the FIFO occupancy
1	1	TRUE	1	Outputs the most recently received byte Sets the TXUIF bit

Notes:

1. TRISxn is the bit in the TRISx register corresponding to the pin to which SDO has been assigned with PPS.
2. LATxn is the bit in the LATx register corresponding to the pin to which SDO has been assigned with PPS.

35.4.1.1 SDO Drive/Tri-state

The TRIS bit associated with the SDO pin controls whether the SDO pin will tri-state. When this TRIS bit is cleared, the pin will always be driving to a level, even when the SPI module is inactive. When the SPI module is inactive

(either due to the master not clocking the SCK line or the SS being false), the SDO pin will be driven to the value of the LAT bit associated with the SDO pin. When the SPI module is active, its output is determined by both TXR and whether there is data in the transmit FIFO.

When the TRIS bit associated with the SDO pin is set, the pin will only have an output level driven to it when TXR = 1 and the Slave Select input is true. In all other cases, the pin will be tri-stated.

Table 35-3. Slave Mode Transmit

TRISxn(1)	TXR	SS	TXBE	SDO State
0	0	FALSE	0	Output level determined by LATxn(2)
0	0	FALSE	1	Output level determined by LATxn(2)
0	0	TRUE	0	Outputs the oldest byte in the TXFIFO Does not remove data from the TXFIFO
0	0	TRUE	1	Outputs the most recently received byte
0	1	FALSE	0	Output level determined by LATxn(2)
0	1	FALSE	1	Output level determined by LATxn(2)
0	1	TRUE	0	Outputs the oldest byte in the TXFIFO Removes transmitted byte from the TXFIFO Decrements occupancy of TXFIFO
0	1	TRUE	1	Outputs the most recently received byte Sets the TXUIF bit
1	0	FALSE	0	Tri-stated
1	0	FALSE	1	Tri-stated
1	0	TRUE	0	Tri-stated
1	0	TRUE	1	Tri-stated
1	1	FALSE	0	Tri-stated
1	1	FALSE	1	Tri-stated
1	1	TRUE	0	Outputs the oldest byte in the TXFIFO Removes transmitted byte from the TXFIFO Decrements occupancy of TXFIFO
1	1	TRUE	1	Outputs the most recently received byte Sets the TXUIF bit

Notes:
1. TRISxn is the bit in the TRISx register corresponding to the pin that SDO has been assigned with PPS.
2. LATxn is the bit in the LATx register corresponding to the pin that SDO has been assigned with PPS.

35.4.1.2 SDO Output Data

The TXR bit controls the nature of the data that is transmitted in Slave mode. When TXR is set, transmitted data is taken from the transmit FIFO. If the FIFO is empty, the most recently received data will be transmitted and the TXUIF flag will be set to indicate that a transmit FIFO underflow has occurred.

When TXR is cleared, the data will be taken from the transmit FIFO, and the FIFO occupancy will not decrease. If the transmit FIFO is empty, the most recently received data will be transmitted, and the TXUIF bit will not be set. However, if the TRIS bit associated with the SDO pin is set, clearing the TXR bit will cause the SPI module to not output any data to the SDO pin.

35.4.2 Slave Mode Receive Options

The RXR bit controls the nature of receptions in Slave mode. When RXR is set, the SDI input data will be stored in the receive FIFO if it is not full. If the receive FIFO is full, the RXOIF bit will be set to indicate a receive FIFO overflow error and the data is discarded. When RXR is cleared, all received data will be ignored and not stored in the receive FIFO (although it may still be used for transmission if the transmit FIFO is empty). The following figure shows a typical Slave mode communication, showing a case where the master writes two then three bytes, showing interrupts as well as the behavior of the transfer counter in Slave mode (see Transfer Counter in Slave Mode for more details on the transfer counter in Slave mode as well as SPI Interrupts for more information on interrupts).

Figure 35-11. SPI Slave Mode Operation – Interrupt-Driven, Master Writes 2+3 Bytes

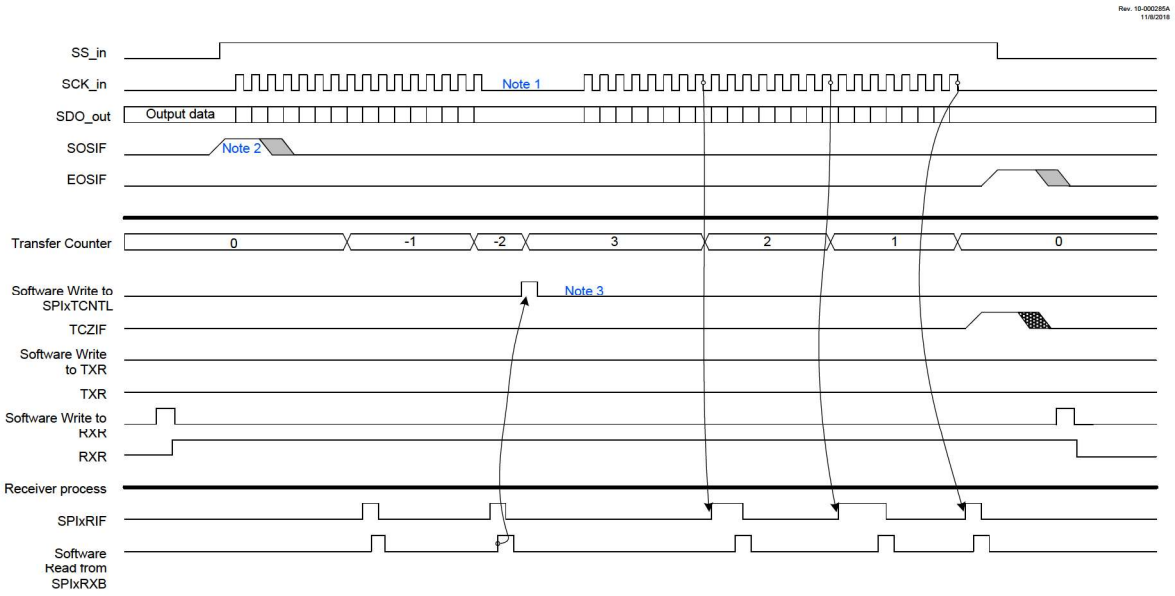

Note: 1. This delay is exaggerated for illustration, and can be as short as1/2 bit period.
2. If the device is sleeping, SOSIF will wake it up for interrupt service.
3. Setting SPIxTCNTL is optional in this example, otherwise it will count -3, -4, -5, and TCZIF will not occur

35.4.3 Slave Mode Slave Select

In Slave mode, an external Slave Select signal can be used to synchronize communication with the master device. The Slave Select line is held in its Inactive state (high by default) until the master device is ready to communicate. When the Slave Select transitions to its Active state, the slave knows that a new transmission is starting.

When the Slave Select goes false at the end of the transmission, the receive function of the selected SPI slave device returns to the Inactive state. The slave is then ready to receive a new transmission when the Slave Select goes true again.

The Slave Select signal is received on the SS input pin. This pin is selected with the SPIxSSPPS register (refer to the **"PPS Inputs"** section). When the input on this pin is true, transmission and reception are enabled, and the SDO pin is driven. When the input on this pin is false, the SDO pin is either tri-stated (if the TRIS bit associated with the SDO pin is set) or driven to the value of the LAT bit associated with the SDO pin (if the TRIS bit associated with the SDO pin is cleared). The SCK input is ignored when the SS input is false.

If the SS input goes false, while a data transfer is still in progress, it is considered a Slave Select fault. The SSFLT bit indicates whether such an event has occurred. The transfer counter value determines the number of bits in a valid data transfer (see Transfer Counter for more details).

The Slave Select polarity is controlled by the SSP bit. When SSP is set (its default state), the Slave Select input is active-low, and when it is cleared, the Slave Select input is active-high.

The Slave Select for the SPI module is controlled by the SSET bit. When SSET is cleared (its default state), the Slave Select will act as described above. When the bit is set, the SPI module will behave as if the SS input is always in its Active state.

Important:
When SSET is set, the effective SS_in signal is always active. Hence, the SSFLT bit may be disregarded.

35.4.4 Slave Mode Clock Configuration

In Slave mode, SCK is an input, and must be configured to the same polarity and clock edge as the master device. As in Master mode, the polarity of the clock input is controlled by the CKP bit and the clock edge used for transmitting data is controlled by the CKE bit.

35.4.5 Daisy-Chain Configuration

The SPI bus can be connected in a daisy-chain configuration. The first slave output is connected to the second slave input, the second slave output is connected to the third slave input, and so on. The final slave output is connected to the master input. Each slave sends out, during a second group of clock pulses, an exact copy of what was received during the first group of clock pulses. The whole chain acts as one large communication shift register. The daisy-chain feature only requires a single Slave Select line from the master device connected to all slave devices (alternately, the slave devices can be configured to ignore the Slave Select line by setting the SSET bit). In a typical daisy-chain configuration, the SCK signal from the master is connected to each of the slave device SCK inputs. However, the SCK input and output are separate signals selected by the PPS control. When the PPS selection is made to configure the SCK input and SCK output on separate pins then, the SCK output will follow the SCK input, allowing for SCK signals to be daisy-chained like the SDO/SDI signals.

The following two figures show block diagrams of a typical daisy-chain connection, and a daisy-chain connection with daisy-chained SPI clocks, respectively.

Figure 35-12. Traditional SPI Daisy-Chain Connection

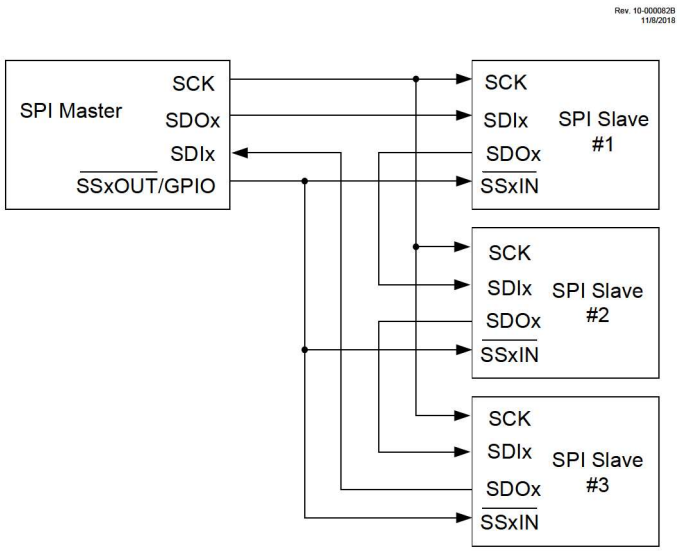

Figure 35-13. SPI Daisy-Chain Connection With Chained SCK

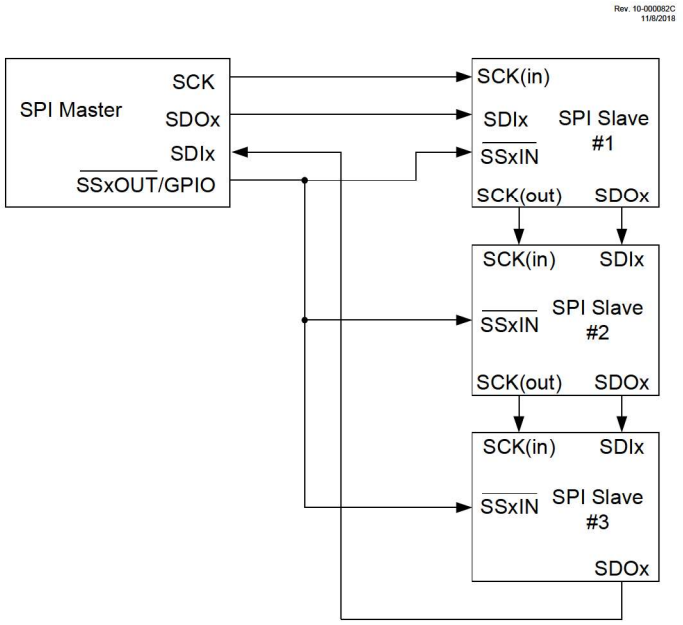

35.5 SPI Operation In Sleep Mode

The SPI Master mode will operate in Sleep, provided the clock source selected by SPIxCLK is active in Sleep mode. FIFOs will operate as they would when the part is awake. When TXR = 1, the transmit FIFO will need to contain data in order for transfers to take place in Sleep. All interrupts will still set the interrupt flags in Sleep but only enabled interrupts will wake the device from Sleep.

The SPI Slave mode will operate in Sleep, because the clock is provided by an external master device. FIFOs will still operate and interrupts will set interrupt flags, and enabled interrupts will wake the device from Sleep.

35.6 SPI Interrupts

There are three top level SPI interrupts in the PIRx register:

- SPI Transmit (SPIxTXIF)
- SPI Receive (SPIxRXIF)
- SPI Module status (SPIxIF)

The SPI Module status interrupts are enabled at the module level in the SPIxINTE register. Only enabled status interrupts will cause the single top level SPIxIF flag to be set.

35.6.1 SPI Receive Interrupt

The SPI receive interrupt is set when the receive FIFO contains data, and is cleared when the receive FIFO is empty. The interrupt flag, SPIxRXIF, is located in one of the PIR registers. The interrupt enable, SPIxRXIE, is located in the corresponding PIE register. The SPIxRXIF interrupt flag is read-only.

35.6.2 SPI Transmit Interrupt

The SPI Transmit interrupt is set when the transmit FIFO is not full and can accept a character, and is cleared when the transmit FIFO is full and cannot accept a character. The interrupt flag, SPIxTXIF, is located in one of the PIR registers. The interrupt enable, SPIxTXIE, is located in the corresponding PIE register. The SPIxTXIF interrupt flag is read-only.

35.6.3 SPI Status Interrupts

The SPIxIF flag is located in one of the PIR registers. This flag is set when any of the individual status flags in SPIxINTF and their respective SPIxINTE bits are set. In order for any specific interrupt flag to interrupt normal program flow both the SPIxIE bit, in the PIE register corresponding to the PIR register, and the specific bit in SPIxINTE associated with that interrupt must be set.

The Status Interrupts include the following:

- Shift Register Empty (SRMTIF)
- Transfer Counter is Zero (TCZIF)
- Start of Slave Select (SOSIF)
- End of Slave Select (EOSIF)
- Receiver Overflow (RXOIF)
- Transmitter Underflow (TXUIF)

35.6.3.1 Shift Register Empty Interrupt

The Shift Register Empty interrupt flag and enable are the SRMTIF and SRMTIE bits respectively. This interrupt is only available in Master mode and triggers when a data transfer completes and conditions are not present to start a new transfer, as dictated by the TXR and RXR bits (see Table 35-1 for conditions for starting a new Master mode data transfer with different TXR/ RXR settings). This interrupt will be triggered at the end of the last full bit period, after SCK has been low for one ½-baud period. See the figure below for more details of the timing of this interrupt as well as other interrupts. This bit will not clear itself when the conditions for starting a new transfer occur, and must be cleared in software.

Figure 35-14. Transfer And Slave Select Interrupt Timing

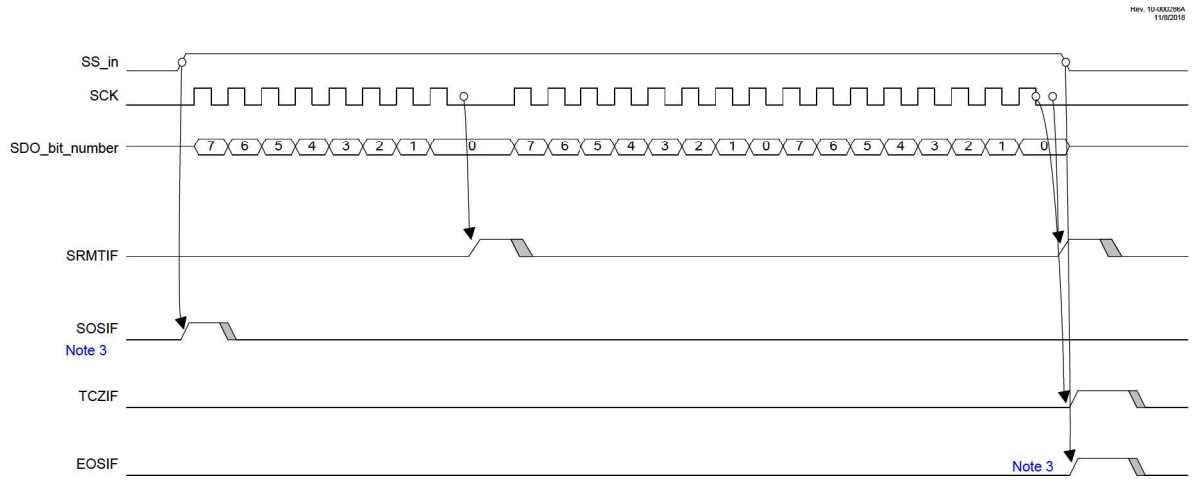

Note 1: SRMTIF available only in Master mode
2: Clearing of interrupt flags is shown for illustration; actual interrupt flags must be cleared in software
3: SOSIF and EOSIF are set according to SS_in, even in Master mode.

35.6.3.2 Transfer Counter is Zero Interrupt

The Transfer Counter is Zero Interrupt flag and enable are the TCZIF and TCZIE bits, respectively. This interrupt will trigger when the transfer counter (defined by BMODE, SPIxTCNT and SPIxTWIDTH) decrements from one to zero. See Figure 35-14 for more details on the timing of this interrupt as well as other interrupts. This bit must be cleared in software.

Important:
The TCZIF flag only indicates that the transfer counter has decremented from one to zero, and may not indicate that the entire data transfer process is complete. Either poll the BUSY bit and wait for it to be cleared or use the Shift Register Empty Interrupt (SRMTIF) to determine when a data transfer is fully complete.

35.6.3.3 Start of Slave Select and End of Slave Select Interrupts

The start of Slave Select Interrupt flag and enable are the SOSIF and SOSIE bits, respectively. The end of Slave Select Interrupt flag and enable are the EOSIF and EOSIE bits, respectively. These interrupts trigger at the leading and trailing edges of the Slave Select input.

The interrupts are active in both Master and Slave mode, and will trigger on transitions of the Slave Select input regardless of which mode the SPI is in. In Master mode, the PPS controls should be used to assign the Slave Select input to the same pin as the Slave Select output, allowing these interrupts to trigger on changes to the Slave Select output.

In Slave mode, changing the SSET bit can trigger these interrupts, as it changes the effective input value of Slave Select.

Both SOSIF and EOSIF must be cleared in software.

35.6.3.4 Receiver Overflow and Transmitter Underflow Interrupts

The receiver overflow interrupt triggers if data is received when the receive FIFO is already full and RXR = 1. In this case, the data will be discarded and the RXOIF bit will be set. The Receiver Overflow Interrupt Enable bit is RXOIE.

The Transmitter Underflow Interrupt flag triggers if a data transfer begins when the transmit FIFO is empty and TXR = 1. In this case, the most recently received data will be transmitted and the TXUIF bit will be set. The Transmitter Underflow Interrupt Enable bit is TXUIE.

Both these interrupts will only occur in Slave mode, as Master mode will not allow the receive FIFO to overflow or the transmit FIFO to underflow.

35.7 Register Definitions: Serial Peripheral Interface

Long bit name prefixes for the SPI peripherals are shown in the table below where “x” refers to the SPI instance number. Refer to the **“Long Bit Names”** section in the **“Register and Bit Naming Conventions”** chapter for more information.

Table 35-4. SPI Bit Name Prefixes

Peripheral	Bit Name Prefix
SPI1	SPI1
SPI2	SPI2

35.7.1 SPIxCON0

Name: SPIxCON0
Address: 0x084,0x091

SPI Control Register 0

Bit	7	6	5	4	3	2	1	0
	EN					LSBF	MST	BMODE
Access	R/W					R/W	R/W	R/W
Reset	0					0	0	0

Bit 7 – EN SPI Enable

Value	Description
1	SPI is enabled
0	SPI is disabled

Bit 2 – LSBF LSb-First Data Exchange Select(1)

Value	Description
1	Data is exchanged LSb first
0	Data is exchanged MSb first (traditional SPI operation)

Bit 1 – MST SPI Master Operating Mode Select(1)

Value	Description
1	SPI module operates as the bus master
0	SPI module operates as a bus slave

Bit 0 – BMODE Bit-Length Mode Select(1)

Value	Description
1	SPIxTWIDTH setting applies to every byte: total bits sent is SPIxTWIDTH*SPIxTCNT, end-of-packet occurs when SPIxTCNT = 0
0	SPIxTWIDTH setting applies only to the last byte exchanged; total bits sent is SPIxTWIDTH + (SPIxTCNT*8)

Note:

1. Do not change this bit when EN = 1.

35.7.2 SPIxCON1

Name: SPIxCON1
Address: 0x085,0x092

SPI Control Register 1

Bit	7	6	5	4	3	2	1	0
	SMP	CKE	CKP	FST		SSP	SDIP	SDOP
Access	R/W	R/W	R/W	R/W		R/W	R/W	R/W
Reset	0	0	0	0		1	0	0

Bit 7 – SMP SPI Input Sample Phase Control

Value	Mode	Description
1	Slave	Reserved
1	Master	SDI input is sampled at the end of data output time
0	Slave or Master	SDI input is sampled in the middle of data output time

Bit 6 – CKE Clock Edge Select

Value	Description
1	Output data changes on transition from Active to Idle clock state
0	Output data changes on transition from Idle to Active clock state

Bit 5 – CKP Clock Polarity Select

Value	Description
1	Idle state for SCK is high level
0	Idle state for SCK is low level

Bit 4 – FST Fast Start Enable

Value	MODE	Description
x	Slave	This bit is ignored
1	Master	Delay to first SCK may be less than ½ baud period
0	Master	Delay to first SCK will be at least ½ baud period

Bit 2 – SSP Slave Select Input/Output Polarity Control

Value	Description
1	SS is active-low
0	SS is active-high

Bit 1 – SDIP SPI Input Polarity Control

Value	Description
1	SDI input is active-low
0	SDI input is active-high

Bit 0 – SDOP SPI Output Polarity Control

Value	Description
1	SDO output is active-low
0	SDO output is active-high

35.7.3 SPIxCON2

Name: SPIxCON2
Address: 0x086,0x093

SPI Control Register 2[3]

Bit	7	6	5	4	3	2	1	0
	BUSY	SSFLT				SSET	TXR	RXR
Access	R	R				R/W	R/W	R/W
Reset	0	0				0	0	0

Bit 7 – BUSY SPI Module Busy Status[1]

Value	Description
1	Data exchange is busy
0	Data exchange is not taking place

Bit 6 – SSFLT SS_in Fault Status

Value	Condition	Description
x	SSET = 1	This bit is unchanged
1	SSET = 0	SS_in ended the transaction unexpectedly, and the data byte being received was lost
0	SSET = 0	SS_in ended normally

Bit 2 – SSET Slave Select Enable

Value	MODE	Description
1	Master	SS_out is driven to the Active state continuously
0	Master	SS_out is driven to the Active state while the transmit counter is not zero
1	Slave	SS_in is ignored and data is clocked on all SCK_in (as though SS = TRUE at all times)
0	Slave	SS_in enables/disables data input and tri-states SDO if the TRIS bit associated with the SDO pin is set (see Slave Mode Transmit table for details)

Bit 1 – TXR Transmit Data-Required Control[2]

Value	Description
1	TxFIFO data is required for a transfer
0	TxFIFO data is not required for a transfer

Bit 0 – RXR Receive FIFO Space-Required Control[2]

Value	Description
1	Data transfers are suspended when the RxFIFO is full
0	Received data is not stored in the FIFO

Notes:

1. The BUSY bit is subject to synchronization delay of up to two instruction cycles. The user must wait after loading the transmit buffer (SPIxTXB register) before using it to determine the status of the SPI module.
2. See Master Mode TXR/RXR Settings table as well as section Master Mode and section Slave Mode for more details pertaining to TXR and RXR function.
3. This register should not be written to while a transfer is in progress (BUSY bit is set).

35.7.4 SPIxCLK

Name: SPIxCLK
Address: 0x08C,0x099

SPI Clock Selection Register

Bit	7	6	5	4	3	2	1	0
					CLKSEL[3:0]			
Access					R/W	R/W	R/W	R/W
Reset					0	0	0	0

Bits 3:0 – CLKSEL[3:0] SPI Clock Source Selection

Table 35-5. SPI CLK Source Selections

CLK	Selection
1111 - 1101	Reserved
1100	CLC4_OUT
1011	CLC3_OUT
1010	CLC2_OUT
1001	CLC1_OUT
1000	SMT1_OUT
0111	TMR4_Postscaler_OUT
0110	TMR2_Postscaler_OUT
0101	TMR0_OUT
0100	Clock Reference Output
0011	EXTOSC
0010	MFINTOSC (500 kHz)
0001	HFINTOSC
0000	F_{OSC} (System Clock)

35.7.5 SPIxBAUD

Name: SPIxBAUD
Address: 0x089,0x096

SPI Baud Rate Register

Bit	7	6	5	4	3	2	1	0
	BAUD[7:0]							
Access	R/W	R/W	R/W	R/W	R/W	R/W	R/W	R/W
Reset	0	0	0	0	0	0	0	0

Bits 7:0 – BAUD[7:0] Baud Clock Prescaler Select

Value	Description
n	SCK high or low time: TSC = SPI Clock Period*(n+1) SCK toggle frequency: FSCK = FBAUD = SPI Clock Frequency/(2*(n+1))

35.7.6 SPIxTCNT

Name: SPIxTCNT
Address: 0x082,0x08F

SPI Transfer Counter Register

Bit	15	14	13	12	11	10	9	8
						TCNTH[2:0]		
Access						R/W	R/W	R/W
Reset						0	0	0

Bit	7	6	5	4	3	2	1	0
	TCNTL[7:0]							
Access	R/W	R/W	R/W	R/W	R/W	R/W	R/W	R/W
Reset	0	0	0	0	0	0	0	0

Bits 10:8 – TCNTH[2:0] SPI Transfer Counter Most Significant Byte

Value	Condition	Description
n	BMODE = 0	Bits 13-11 of the transfer bit count
n	BMODE = 1	Bits 10-8 of the transfer byte count

Bits 7:0 – TCNTL[7:0] SPI Transfer Counter Least Significant Byte

Value	Condition	Description
n	BMODE = 0	Bits 10-3 of the transfer bit count
n	BMODE = 1	Bits 7-0 of the transfer byte count

35.7.7 SPIxTWIDTH

Name: SPIxTWIDTH
Address: 0x088,0x095

SPI Transfer Width Register

Bit	7	6	5	4	3	2	1	0
						TWIDTH[2:0]		
Access						R/W	R/W	R/W
Reset						0	0	0

Bits 2:0 – TWIDTH[2:0] SPI Transfer Count Byte Width or 3 LSbs of the Transfer Bit Count

Value	Condition	Description
n	BMODE = 0	Bits 2-0 of the transfer bit count
n	BMODE = 1	Number of bits in each transfer byte count. Bits = n (when n > 0) or 8 (when n = 0).

35.7.8 SPIxSTATUS

Name: SPIxSTATUS
Address: 0x087,0x094

SPI Status Register

Bit	7	6	5	4	3	2	1	0
	TXWE		TXBE		RXRE	CLB		RXBF
Access	R/C/HS		R		R/C/HS	S		R
Reset	0		1		0	0		0

Bit 7 – TXWE Transmit Buffer Write Error

Value	Description
1	SPIxTXB was written while TxFIFO was full
0	No error has occurred

Bit 5 – TXBE Transmit Buffer Empty

Value	Description
1	Transmit buffer TxFIFO is empty
0	Transmit buffer is not empty

Bit 3 – RXRE Receive Buffer Read Error

Value	Description
1	SPIxRXB was read while RxFIFO was empty
0	No error has occurred

Bit 2 – CLB Clear Buffer Control

Value	Description
1	Reset the receive and transmit buffers, making both buffers empty
0	Take no action

Bit 0 – RXBF Receive Buffer Full

Value	Description
1	Receive buffer is full
0	Receive buffer is not full

35.7.9 SPIxRXB

Name: SPIxRXB
Address: 0x080,0x08D

SPI Receive Buffer

Bit	7	6	5	4	3	2	1	0
	RXB[7:0]							
Access	R	R	R	R	R	R	R	R
Reset	x	x	x	x	x	x	x	x

Bits 7:0 – RXB[7:0] Receive Buffer

Value	Condition	Description
n	Receive buffer is not empty	Contains the top-most byte of the RXFIFO. Reading this register will remove the RXFIFO top-most byte and decrease the occupancy of the RXFIFO by 1.
0	Receive buffer is empty	Reading this register will return '0', leave the occupancy unchanged, and set the RXRE Status bit

35.7.10 SPIxTXB

Name: SPIxTXB
Address: 0x081,0x08E

SPI Transmit Buffer

Bit	7	6	5	4	3	2	1	0
	TXB[7:0]							
Access	W	W	W	W	W	W	W	W
Reset	x	x	x	x	x	x	x	x

Bits 7:0 – TXB[7:0] Transmit Buffer

Value	Condition	Description
n	Transmit buffer is not full	Writing to this register adds the data to the top of the TXFIFO and increases the occupancy of the TXFIFO by 1.
x	Transmit buffer is full	Writing to this register does not affect the data in the TXFIFO or the occupancy count. The TXWE Status bit will be set.

35.7.11 SPIxINTE

Name: SPIxINTE
Address: 0x08B,0x098

SPI Interrupt Enable Register

Bit	7	6	5	4	3	2	1	0
	SRMTIE	TCZIE	SOSIE	EOSIE		RXOIE	TXUIE	
Access	R/W	R/W	R/W	R/W		R/W	R/W	
Reset	0	0	0	0		0	0	

Bit 7 – SRMTIE Shift Register Empty Interrupt Enable

Value	Description
1	Interrupt is enabled
0	Interrupt is not enabled

Bit 6 – TCZIE Transfer Counter is Zero Interrupt Enable

Value	Description
1	Interrupt is enabled
0	Interrupt is not enabled

Bit 5 – SOSIE Start of Slave Select Interrupt Enable

Value	Description
1	Interrupt is enabled
0	Interrupt is not enabled

Bit 4 – EOSIE End of Slave Select Interrupt Enable

Value	Description
1	Interrupt is enabled
0	Interrupt is not enabled

Bit 2 – RXOIE Receiver Overflow Interrupt Enable

Value	Description
1	Interrupt is enabled
0	Interrupt is not enabled

Bit 1 – TXUIE Transmitter Underflow Interrupt Enable

Value	Description
1	Interrupt is enabled
0	Interrupt is not enabled

35.7.12 SPIxINTF

Name: SPIxINTF
Address: 0x08A,0x097

SPI Interrupt Flag Register

Bit	7	6	5	4	3	2	1	0
	SRMTIF	TCZIF	SOSIF	EOSIF		RXOIF	TXUIF	
Access	R/W/HS	R/W/HS	R/W/HS	R/W/HS		R/W/HS	R/W/HS	
Reset	0	0	0	0		0	0	

Bit 7 – SRMTIF Shift Register Empty Interrupt Flag

Value	MODE	Description
x	Slave	This bit is ignored
1	Master	The data transfer is complete
0	Master	Either no data transfers have occurred or a data transfer is in progress

Bit 6 – TCZIF Transfer Counter is Zero Interrupt Flag

Value	Description
1	The transfer counter has decremented to zero
0	No interrupt pending

Bit 5 – SOSIF Start of Slave Select Interrupt Flag

Value	Description
1	SS_in transitioned from false to true
0	No interrupt pending

Bit 4 – EOSIF End of Slave Select Interrupt Flag

Value	Description
1	SS_in transitioned from true to false
0	No interrupt pending

Bit 2 – RXOIF Receiver Overflow Interrupt Flag

Value	Description
1	Data transfer completed when RXBF = 1 (edge-triggered) and RXR = 1
0	No interrupt pending

Bit 1 – TXUIF Transmitter Underflow Interrupt Flag

Value	Description
1	Slave Data transfer started when TXBE = 1 and TXR = 1
0	No interrupt pending

35.8 Register Summary - SPI Control

Address	Name	Bit Pos.	7	6	5	4	3	2	1	0
0x00 ... 0x7F	Reserved									
0x80	SPI1RXB	7:0	RXB[7:0]							
0x81	SPI1TXB	7:0	TXB[7:0]							
0x82	SPI1TCNT	7:0	TCNTL[7:0]							
		15:8						TCNTH[2:0]		
0x84	SPI1CON0	7:0	EN					LSBF	MST	BMODE
0x85	SPI1CON1	7:0	SMP	CKE	CKP	FST		SSP	SDIP	SDOP
0x86	SPI1CON2	7:0	BUSY	SSFLT				SSET	TXR	RXR
0x87	SPI1STATUS	7:0	TXWE		TXBE		RXRE	CLB		RXBF
0x88	SPI1TWIDTH	7:0						TWIDTH[2:0]		
0x89	SPI1BAUD	7:0	BAUD[7:0]							
0x8A	SPI1INTF	7:0	SRMTIF	TCZIF	SOSIF	EOSIF		RXOIF	TXUIF	
0x8B	SPI1INTE	7:0	SRMTIE	TCZIE	SOSIE	EOSIE		RXOIE	TXUIE	
0x8C	SPI1CLK	7:0					CLKSEL[3:0]			
0x8D	SPI2RXB	7:0	RXB[7:0]							
0x8E	SPI2TXB	7:0	TXB[7:0]							
0x8F	SPI2TCNT	7:0	TCNTL[7:0]							
		15:8						TCNTH[2:0]		
0x91	SPI2CON0	7:0	EN					LSBF	MST	BMODE
0x92	SPI2CON1	7:0	SMP	CKE	CKP	FST		SSP	SDIP	SDOP
0x93	SPI2CON2	7:0	BUSY	SSFLT				SSET	TXR	RXR
0x94	SPI2STATUS	7:0	TXWE		TXBE		RXRE	CLB		RXBF
0x95	SPI2TWIDTH	7:0						TWIDTH[2:0]		
0x96	SPI2BAUD	7:0	BAUD[7:0]							
0x97	SPI2INTF	7:0	SRMTIF	TCZIF	SOSIF	EOSIF		RXOIF	TXUIF	
0x98	SPI2INTE	7:0	SRMTIE	TCZIE	SOSIE	EOSIE		RXOIE	TXUIE	
0x99	SPI2CLK	7:0					CLKSEL[3:0]			

36. I²C - Inter-Integrated Circuit Module

The Inter-Integrated Circuit (I²C) bus is a multi-master serial data communication bus. Devices communicate in a master/slave environment where the master devices initiate the communication. A slave device is controlled through addressing.

The following figure shows a block diagram of the I²C interface module, and shows both Master and Slave modes together.

Figure 36-1. I²C Block Diagram

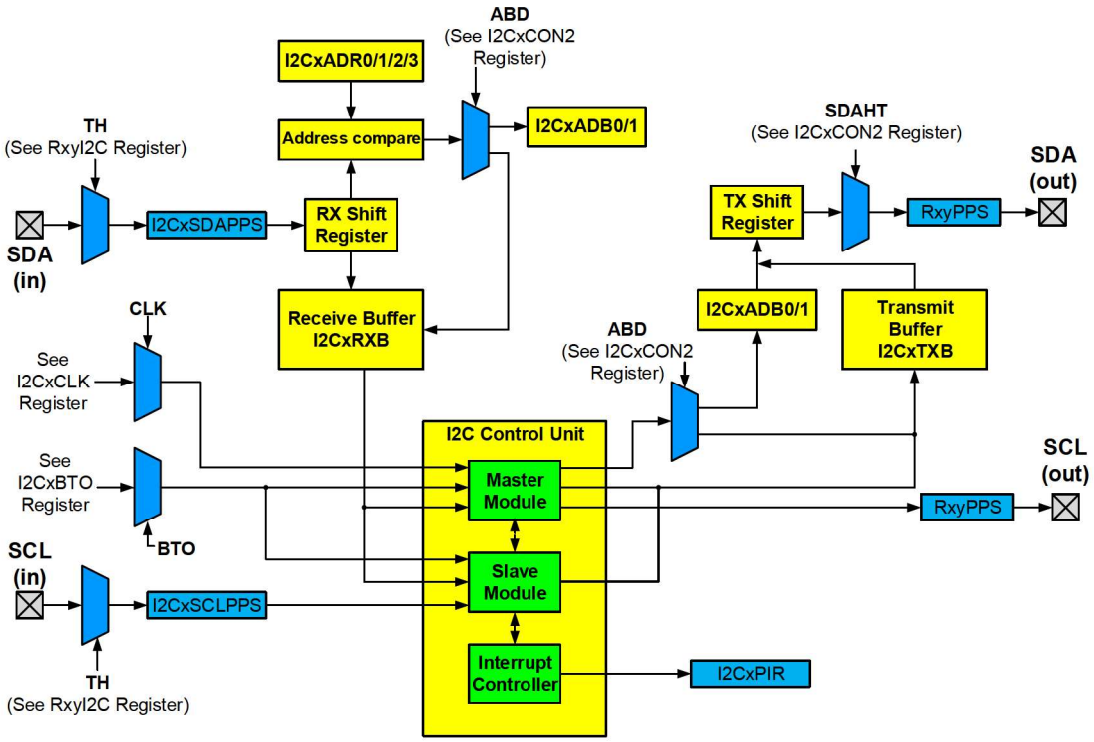

36.1 I²C Features

The I²C supports the following modes and features:

- Modes
  - Master mode
  - Slave mode
  - Multi-Master mode
- Features
  - Supports Standard-mode (100 kHz), Fast-mode (400 kHz) and Fast-mode plus (1 MHz) modes of operation
  - Dedicated Address, Receive, and Transmit buffers
  - Up to four unique Slave addresses
  - General Call addressing
  - 7-bit and 10-bit addressing with optional masking
  - Interrupts for:

    - Start condition
    - Restart condition
    - Stop condition
    - Address match
    - Data Write
    - Acknowledge Status
    - NACK detection
    - Data Byte Count
    - Bus Collision
    - Bus Time-out
  - Clock Stretching for:
    - RX buffer full
    - TX buffer empty
    - Incoming address match
    - Data Write
    - Acknowledge Status
  - Bus Collision Detection with Arbitration
  - Bus Time-out Detection
    - Selectable clock sources
    - Clock prescaler
  - Selectable Serial Data (SDA) Hold Time
  - Dedicated I^2C Pad (I/O) Control
    - Standard GPIO or I^2C-specific slew rate control
    - Selectable I^2C pull-up levels
    - I^2C-specific, SMBus 2.0/3.0, or standard GPIO input threshold level selections
  - Integrated Direct Memory Access (DMA) support
  - Remappable pin locations using Peripheral Pin Select (PPS)

36.2 I^2C Terminology

The I^2C communication protocol terminology used throughout this document have been adapted from the Phillips I^2C Specification and can be found in the table below.

I^2C Bus Terminology and Definitions

Term	Definition
Master	The device that initiates a transfer, generates the clock signal and terminates a transfer
Slave	The device addressed by the master
Multi-Master	A bus containing more than one master device that can initiate communication
Transmitter	The device that shifts data out onto the bus
Receiver	The device that shifts data in from the bus
Arbitration	Procedure that ensures only one master at a time controls the bus
Synchronization	Procedure that synchronizes the clock signal between two or more devices on the bus
Idle	The state in which no activity occurs on the bus and both bus lines are at a high logic level
Active	The state in which one or more devices are communicating on the bus
Matching Address	The address byte received by a slave that matches the value that is stored in the I2CxADR0/1/2/3 registers

Addressed Slave	Slave device that has received a matching address and is actively being clocked by a master device
Write Request	Master transmits an address with the R/$\overline{W}$ bit clear indicating that it wishes to transmit data to a slave device
Read Request	Master transmits an address with the R/$\overline{W}$ bit set indicating that it wishes to receive data from a slave device
Clock Stretching	The action in which a device holds the SCL line low to stall communication
Bus Collision	Occurs when the module samples the SDA line and returns a low state while expecting a high state
Bus Time-out	Occurs whenever communication stalls for a period longer than acceptable

36.3 I²C Module Overview

The I²C module provides a synchronous serial interface between the microcontroller and other I²C-compatible devices using a bidirectional two-wire bus. Devices operate in a master/slave environment that may contain one or more master devices and one or more slave devices. The master device always initiates communication.

The I²C bus consists of two signal connections:

- Serial Clock (SCL)
- Serial Data (SDA)

Both the SCL and SDA connections are open-drain lines, each line requiring pull-up resistors to the application's supply voltage. Pulling the line to ground is considered a logic '0', while allowing the line to float is considered a logic '1'. It is important to note that the voltage levels of the logic low and logic high are not fixed and are dependent on the bus supply voltage. According to the I²C Specification, a logic low input level is up to 30% of V_{DD} ($V_{IL} \leq 0.3V_{DD}$), while the logic high input level is 70% to 100% of V_{DD} ($V_{IH} \geq 0.7V_{DD}$). Both signal connections are considered bidirectional, although the SCL signal can only be an output in Master mode and an input in Slave mode.

All transactions on the bus are initiated and terminated by the master device. Depending on the direction of the data being transferred, there are four main operations performed by the I²C module:

- Master Transmit: master is transmitting data to a slave
- Master Receive: master is receiving data from a slave
- Slave Transmit: slave is transmitting data to a master
- Slave Receive: slave is receiving data from a master

The I²C interface allows for a multi-master bus, meaning that there can be several master devices present on the bus. A master can select a slave device by transmitting a unique address on the bus. When the address matches a slave's address, the slave responds with an Acknowledge condition ($\overline{ACK}$), and communication between the master and that slave can commence. All other devices connected to the bus must ignore any transactions not intended for them.

The following figure shows a typical I²C bus configuration with one master and two slaves.

Figure 36-2. I²C Master-Slave Connections

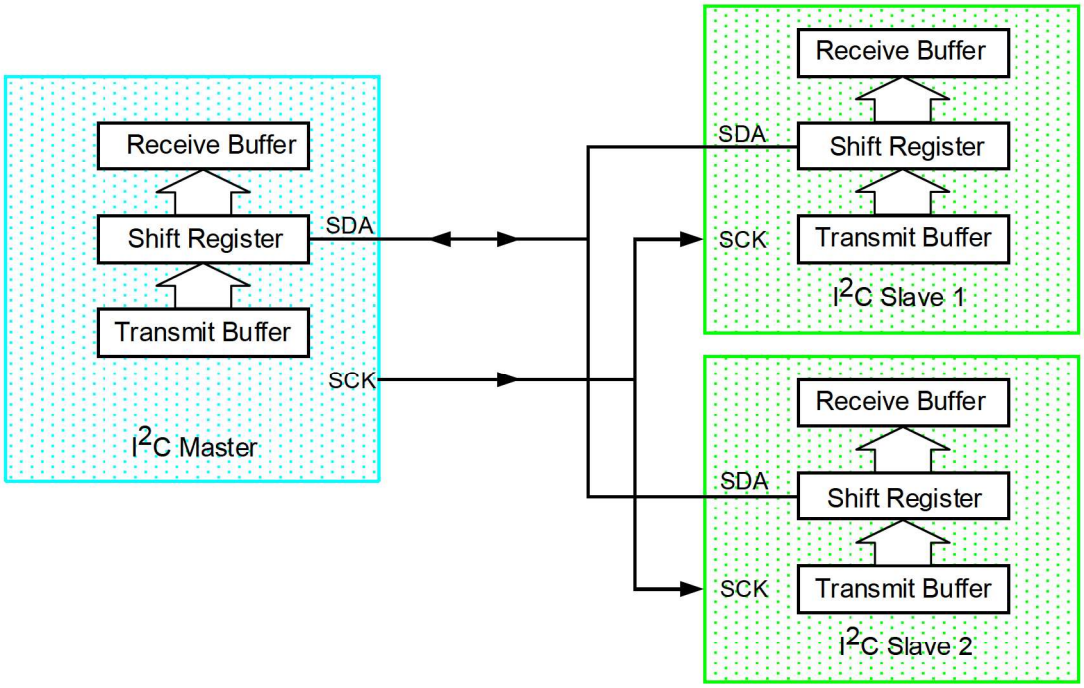

36.3.1 Byte Format

As previously mentioned, all I²C communication is performed in 9-bit segments. The transmitting device sends a byte to a receiver, and once the byte is processed by the receiver, the receiver returns an Acknowledge bit. There are no limits to the amount of data bytes in a I²C transmission.

After the 8th falling edge of the SCL line, the transmitting device releases control of the SDA line to allow the receiver to respond with either an Acknowledge ($\overline{ACK}$) sequence or a Not Acknowledge (NACK) sequence. At this point, if the receiving device is a slave, it can hold the SCL line low (clock stretch) to allow itself time to process the incoming byte. Once the byte has been processed, the receiving device releases the SCL line, allowing the master device to provide the 9th clock pulse, within which the slave responds with either an $\overline{ACK}$ or a NACK sequence. If the receiving device is a master, it may also hold the SCL line low until it has processed the received byte. Once the byte has been processed, the master device will generate the 9th clock pulse and transmit the $\overline{ACK}$ or NACK sequence.

Data is valid to change only while the SCL signal is in a low state, and sampled on the rising edge of SCL. Changes on the SDA line while the SCL line is high indicate either a Start or Stop condition.

36.3.2 SDA and SCL Pins

The SDA and SCL pins must be configured as open-drain outputs. Open-drain configuration is accomplished by setting the appropriate bits in the Open-Drain Control (ODCONx) registers, while output direction configuration is handled by clearing the appropriate bits in the Tri-State Control (TRISx) registers. Input threshold, slew rate, and internal pull-up settings are configured using the RxyI2C registers. The RxyI2C registers are used exclusively on the default I²C pin locations, and provide the following selections:

- Input threshold levels:
  - SMBus 3.0 (1.35V) input threshold
  - SMBus 2.0 (2.1V) input threshold
  - I²C-specific input thresholds

  - Standard GPIO input thresholds (controlled by the Input Level Control (INLVLx) registers)
- Slew rate limiting:
  - I^2C-specific slew rate limiting
  - Standard GPIO slew rate (controlled by the Slew Rate Control (SLRCONx) registers)
- I^2C pull-ups:
  - Programmable ten or two times the current of the standard internal pull-up
  - Standard GPIO pull-up (controlled by the Weak Pull-Up Control (WPUx) registers)

Important: The pin locations for SDA and SCL are remappable through the Peripheral Pin Select (PPS) registers. If new pin locations for SDA and SCL are desired, user software must configure the INLVLx, SLRCONx, ODCONx, and TRISx registers for each new pin location. The RxyI2C registers cannot be used since they are dedicated to the default pin locations. Additionally, the internal pull-ups for non-I^2C pins are not strong enough to drive the pins; therefore, external pull-up resistors must be used.

36.3.2.1 SDA Hold Time

SDA hold time refers to the amount of time between the low threshold region of the falling edge of SCL ($V_{IL} \leq 0.3V_{DD}$) and either the low threshold region of the rising edge of SDA ($V_{IL} \leq 0.3V_{DD}$) or the high threshold region of the falling edge of SDA ($V_{IH} \geq 0.7V_{DD}$) (see figure below). If the SCL fall time is long or close to the maximum allowable time set by the I^2C Specification, data may be sampled in the undefined logic state between the 70% and 30% region of the falling SCL edge, leading to data corruption. The I^2C module offers selectable SDA hold times, which can be useful to ensure valid data transfers at various bus data rates and capacitance loads.

Figure 36-3. SDA Hold Time

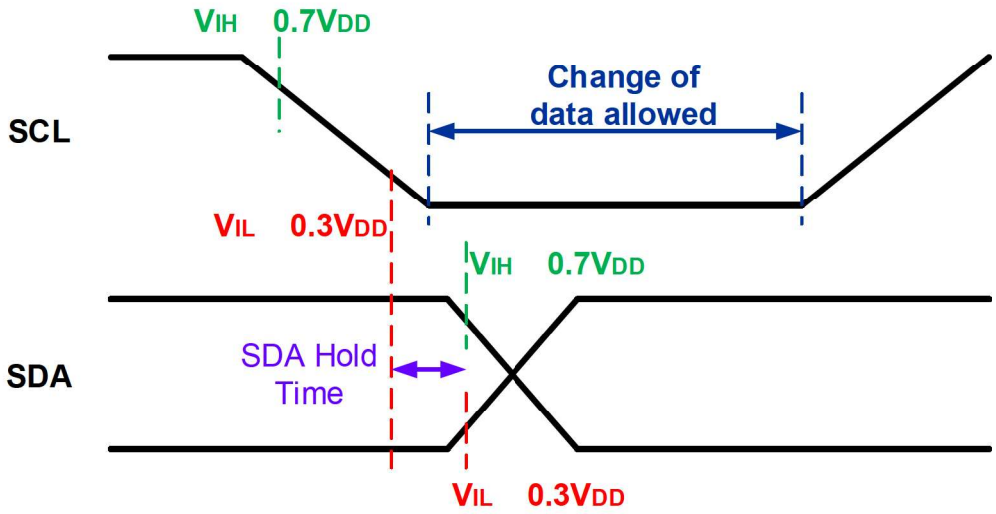

36.3.3 Start Condition

All I^2C transmissions begin with a Start condition. The Start condition is used to synchronize the SCL signals between the master and slave devices. The I^2C Specification defines a Start condition as a transition of the SDA line from a logic high level (Idle state) to a logic low level (Active state) while the SCL line is at a logic high (see figure below). A Start condition is always generated by the master, and is initiated by either writing to the Start (S) bit or by writing to the I^2C Transmit Buffer (I2CxTXB) register, depending on the Address Buffer Disable (ABD) bit setting.

When the I^2C module is configured in Master mode, module hardware waits until the bus is free (Idle state). Module hardware checks the Bus Free Status (BFRE) bit to ensure the bus is idle before initiating a Start condition. When the BFRE bit is set, the bus is considered idle, and indicates that the SCL and SDA lines have been in a logic high state

for the amount of I^2C clock cycles as selected by the Bus Free Time Selection (BFRET) bits. When a Start condition is detected on the bus, module hardware clears the BFRE bit, indicating an active bus.

In Multi-Master mode, it is possible for two master devices to issue Start conditions at the same time. If two or more masters initiate a Start at the same time, a bus collision will occur; however, the I^2C Specification states that a bus collision cannot occur on a Start. In this case, the competing master devices must go through bus arbitration during the addressing phase.

The figure below shows a Start condition.

Figure 36-4. Start Condition

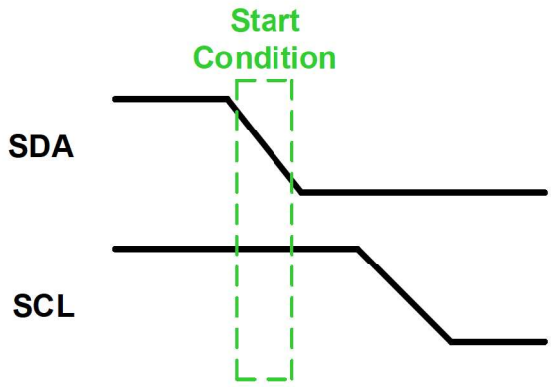

36.3.4 Acknowledge Sequence

The 9th SCL pulse for any transferred address/data byte is reserved for the Acknowledge ($\overline{ACK}$) sequence. During an Acknowledge sequence, the transmitting device relinquishes control of the SDA line to the receiving device. At this time, the receiving device must decide whether to pull the SDA line low ($\overline{ACK}$) or allow the line to float high (NACK). Since the Acknowledge sequence is an active-low signal, pulling the SDA line low informs the transmitter that the receiver has successfully received the transmitted data.

The Acknowledge Data (ACKDT) bit holds the value to be transmitted during an Acknowledge sequence while the I2CxCNT register is non-zero (I2CxCNT != 0). When a slave device receives a matching address, or a receiver receives valid data, the ACKDT bit is cleared by user software to indicate an $\overline{ACK}$. If the slave does not receive a matching address, user software sets the ACKDT bit, indicating a NACK. In Slave or Multi-Master modes, if the Address Interrupt and Hold Enable (ADRIE) or Write Interrupt and Hold Enable (WRIE) bits are set, the clock is stretched after receiving a matching address or after the 8th falling edge of SCL when a data byte is received. This allows user software time to determine the $\overline{ACK}$/NACK response to send back to the transmitter.

The Acknowledge End of Count (ACKCNT) bit holds the value that will be transmitted once the I2CxCNT register reaches a zero value (I2CxCNT = 0). When the I2CxCNT register reaches a zero value, the ACKCNT bit can be cleared (ACKCNT = 0), indicating an $\overline{ACK}$, or ACKCNT can be set (ACKCNT = 1), indicating a NACK.

Important: The ACKCNT bit is only used when the I2CxCNT register is zero, otherwise the ACKDT bit is used for $\overline{ACK}$/NACK sequences.

In Master Write or Slave Read modes, the Acknowledge Status (ACKSTAT) bit holds the result of the Acknowledge sequence transmitted by the receiving device. The ACKSTAT bit is cleared when the receiver sends an $\overline{ACK}$, and is set when the receiver does not Acknowledge (NACK).

The Acknowledge Time Status (ACKT) bit indicates whether or not the bus is in an Acknowledge sequence. The ACKT bit is set during an $\overline{ACK}$/NACK sequence on the 8th falling edge of SCL, and is cleared on the 9th rising edge of SCL, indicating that the bus is not in an $\overline{ACK}$/NACK sequence.

Certain conditions will cause a NACK sequence to be sent automatically. A NACK sequence is generated by module hardware when any of the following bits are set:

- Transmit Write Error Status (TXWE)
- Transmit Underflow Status (TXU)
- Receive Read Error Status (RXRE)
- Receive Overflow Status (RXO)

Important: Once a NACK is detected on the bus, all subsequent Acknowledge sequences will consist of a NACK until all error conditions are cleared.

The following figure shows $\overline{ACK}$ and NACK sequences.

Figure 36-5. $\overline{ACK}$/NACK Sequences

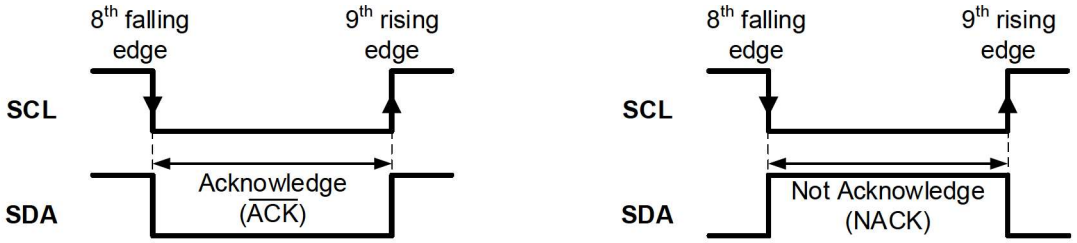

36.3.5 Restart Condition

A Restart condition is essentially the same as a Start condition – the SDA line transitions from an idle level to an active level while the SCL line is idle – but may be used in place of a Stop condition whenever the master device has completed its current transfer but wishes to keep control of the bus. A Restart condition has the same effect as a Start condition, resetting all slave logic and preparing it to receive an address.

A Restart condition is also used when the master wishes to use a combined data transfer format. A combined data transfer format is used when a master wishes to communicate with a specific register address or memory location. In a combined format, the master issues a Start condition, followed by the slave's address, followed by a data byte which represents the desired slave register or memory address. Once the slave address and data byte have been acknowledged by the slave, the master issues a Restart condition, followed by the slave address. If the master wishes to write data to the slave, the LSb of the slave address, the Read/not Write (R/$\overline{W}$) bit, will be clear. If the master wishes to read data from the slave, the R/$\overline{W}$ bit will be set. Once the slave has acknowledged the second address byte, the master issues a Restart condition, followed by the upper byte of the slave address with the R/$\overline{W}$ bit set. Slave logic will then acknowledge the upper byte, and begin to transmit data to the master.

Important: In 10-bit Slave mode, a Restart is required for the master to read data out of the slave, regardless of which data transfer format is used – master read-only or combined. For example, if the master wishes to perform a bulk read, it will transmit the slave's 10-bit address with the R/$\overline{W}$ bit clear.

The figure below shows a Restart condition.

Figure 36-6. Restart Condition

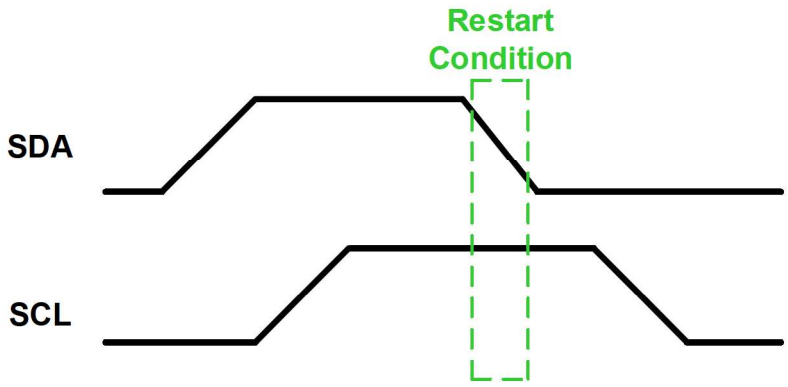

36.3.6 Stop Condition

All I^2C transmissions end with a Stop condition. A Stop condition occurs when the SDA line transitions from a logic low (active) level to a logic high (idle) level while the SCL line is at a logic high level. A Stop condition is always generated by the master device, and is generated by module hardware when a Not Acknowledge (NACK) is detected on the bus, a bus time-out event occurs, or when the I^2C Byte Count (I2CxCNT) register reaches a zero count. A Stop condition may also be generated through software by setting the Stop (P) bit.

The figure below shows a Stop condition.

Figure 36-7. Stop Condition

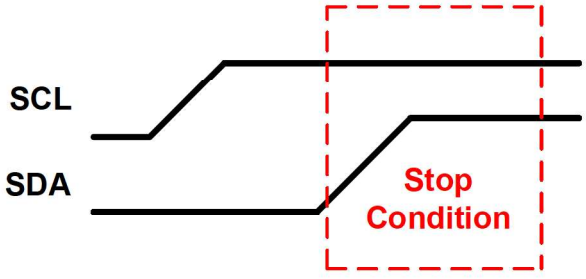

36.3.7 Bus Timeout

The SMBus protocol requires a bus watchdog to prevent a stalled device from holding the bus indefinitely. The I2C Bus Timeout Clock Source Selection (I2CxBTOC) register provides several clock sources that can be used as the timeout time base. The I2C Bus Timeout (I2CxBTO) register is used to determine the actual bus timeout time period, as well as how the module responds to a timeout.

The bus timeout hardware monitors for the following conditions:

- SCL = 0 (regardless of whether or not the bus is Active)
- SCL = 1 and SDA = 0 while the bus is Active

If either of these conditions are true, an internal timeout counter increments, and continues to increment as long as the condition stays true, or until the timeout period has expired. If these conditions change (e.g. SCL = 1), the internal timeout counter is reset by module hardware.

The Bus Timeout Clock Source Selection (BTOC) bits select the timeout clock source. If an oscillator is selected as the timeout clock source, such as the LFINTOSC, the timeout clock base period is approximately 1 ms. If a timer is selected as the timeout clock source, the timer can be configured to produce a variety of time periods.

Remember: The SMBus protocol dictates a 25 ms timeout for slave devices and a 35 ms timeout for master devices.

The Timeout Time Selection (TOTIME) bits and the Timeout Prescaler Extension Enable (TOBY32) bit are used to determine the timeout period. The value written into TOTIME multiplies the base timeout clock period. For example, if a value of '35' is written into the TOTIME bits, and the LFINTOSC is selected as the timeout clock source, the timeout period is approximately 35 ms (35 x 1 ms). If the TOBY32 bit is set (TOBY32 = 1), the timeout period determined by the TOTIME bits is multiplied by 32. If TOBY32 is clear (TOBY32 = 0), the timeout period determined by the TOTIME bits is used as the timeout period.

The examples below illustrate possible timeout configurations.

Example 36-1. 35 ms BTO Period Configuration

```
void Init_BTO_35(void)         // Selections produce a 35 ms BTO period
{
  I2C1BTOC = 0x06;                // LFINTOSC as BTO clock source
  I2C1BTObits.TOREC = 1;          // Reset I2C interface, set BTOIF
  I2C1BTObits.TOBY32 = 0;         // BTO time = TOTIME * TBTOCLK
  I2C1BTObits.TOTIME = 0x23;      // TOTIME = TBTOCLK * 35
                                  // = 1 ms * 35 = 35 ms

}
```

Example 36-2. 64 ms BTO Configuration

```
void Init_BTO_64(void)     // Selections produce a 64 ms BTO period
{
  I2C1BTOC = 0x06;                 // LFINTOSC as BTO clock source
  I2C1BTObits.TOREC = 1;           // Reset I2C interface, set BTOIF
  I2C1BTObits.TOBY32 = 1;          // BTO time = TOTIME * TBTOCLK * 32
                                   // = 2 ms * 32 = 64 ms
  I2C1BTObits.TOTIME = 0x02;       // TOTIME = TBTOCLK * 2
                                   // = 1 ms * 2 = 2 ms
}
```

The Timeout Recovery Selection (TOREC) bit determines how the module will respond to a bus timeout. When a bus timeout occurs and TOREC is set (TOREC = 1), the I2C module is reset and module hardware sets the Bus Timeout Interrupt Flag (BTOIF). If the Bus Timeout Interrupt Enable (BTOIE) is also set, an interrupt will be generated. If a bus timeout occurs and TOREC is clear (TOREC = 0), the BTOIF bit is set, but the module is not reset.

If the module is configured in Slave mode with TOREC set (TOREC = 1), and a bus timeout event occurs (regardless of the state of the Slave Mode Active (SMA) bit), the module is immediately reset, the SMA and Slave Clock Stretching (CSTR) bits are cleared, and the Bus Timeout Interrupt Flag (BTOIF) bit is set.

If the module is configured in Slave mode with TOREC clear (TOREC = 0), and a bus timeout event occurs (regardless of the state of the Slave Mode Active (SMA) bit), the BTOIF bit is set, but user software must reset the module.

Important: It is recommended to set TOREC (TOREC = 1) when operating in Slave mode.

If the module is configured in Master mode with TOREC set (TOREC = 1), and the bus timeout event occurs while the Master is active (Master Mode Active (MMA) = 1), the Master Data Ready (MDR) bit is cleared, the module will immediately attempt to transmit a Stop condition, and sets the BTOIF bit. Stop condition generation may be delayed if a slave device is stretching the clock, but will resume once the clock is released, or if the slave holding the bus also has a timeout event occur. The MMA bit is only cleared after the Stop condition has been generated.

If the module is configured in Master mode with TOREC clear (TOREC = 0), and the bus timeout event occurs while the Master is active (Master Mode Active (MMA) = 1), the MDR bit is cleared and the BTOIF bit is set, but user software must initiate the Stop condition by setting the P bit.

The figure below shows an example of a Bus Timeout event when the module is operating in Master mode.

Figure 36-8. Master Mode Bus Timeout Example

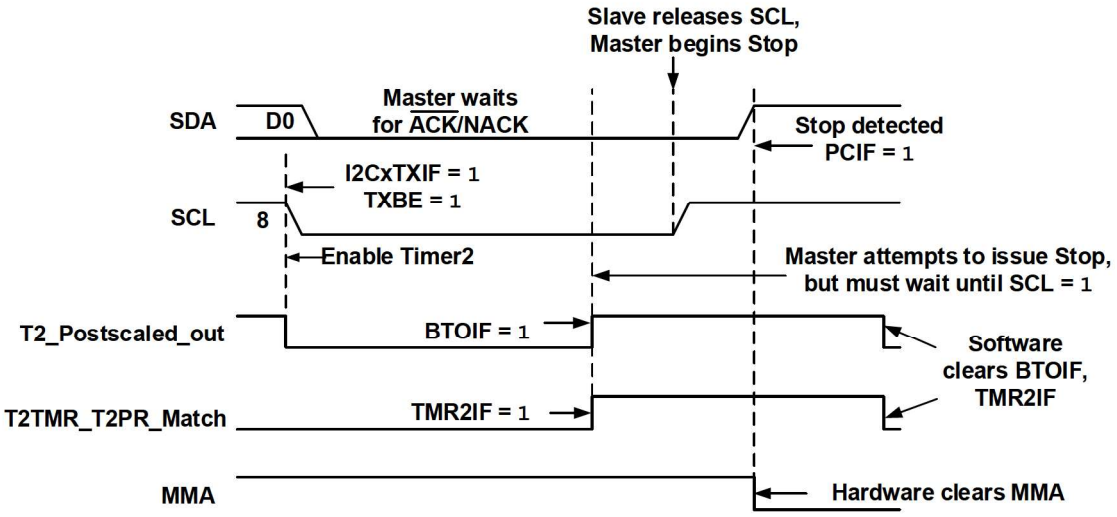

36.3.8 Address Buffers

The I²C module has two address buffer registers, I2CxADB0 and I2CxADB1, which can be used as address receive buffers in Slave mode, address transmit buffers in Master mode, or both address transmit and address receive buffers in 7-bit Multi-Master mode (see table below). The address buffers are enabled/disabled via the Address Buffer Disable (ABD) bit.

When the ABD bit is clear (ABD = 0), the buffers are enabled, which means:

- In 7-bit Master mode, the desired slave address with the R/$\overline{W}$ value is transmitted from the I2CxADB1 register, bypassing the I2C Transmit Buffer (I2CxTXB). I2CxADB0 is unused.
- In 10-bit Master mode, I2CxADB1 holds the upper bits and R/$\overline{W}$ value of the desired slave address, while I2CxADB0 holds the lower eight bits of the desired slave address. Master hardware copies the contents of I2CxADB1 to the transmit shift register, and waits for an $\overline{ACK}$ from the slave. Once the $\overline{ACK}$ is received, master hardware copies the contents of I2CxADB0 to the transmit shift register.
- In 7-bit Slave mode, a matching received address is loaded into I2CxADB0, bypassing the I2C Receive Buffer (I2CxRXB). I2CxADB1 is unused.
- In 10-bit Slave mode, I2CxADB0 is loaded with the lower eight bits of the matching received address, while I2CxADB1 is loaded with the upper bits and R/$\overline{W}$ value of the matching received address.
- In 7-bit Multi-Master mode, the device can be both a master and a slave depending on the sequence of events on the bus. When being addressed as a slave, the matching received address with R/$\overline{W}$ value is stored into I2CxADB0. When being used as a master, the desired slave address and R/$\overline{W}$ value are loaded into the I2CxADB1 register.

When the ABD bit is set (ABD = 1), the buffers are disabled, which means:

- In Master mode, the desired slave address is transmitted from the I2CxTXB register.
- In Slave mode, a matching received address is loaded into the I2CxRXB register.

Table 36-1. Address Buffer Direction

Mode	I2CxADB0	I2CxADB1
Slave (7-bit)	RX	Unused
Slave (10-bit)	RX (address low byte)	RX (address high byte)
Master (7-bit)	Unused	TX
Master (10-bit)	TX (address low byte)	TX (address high byte)
Multi-Master (7-bit)	RX	TX

36.3.9 Transmit Buffer

The I²C module has a dedicated transmit buffer, I2CxTXB, which is independent from the receive buffer.

The transmit buffer is loaded with an address byte (when ABD = 1), or a data byte, that is copied into the transmit shift register and transmitted onto the bus. When the I2CxTXB register does not contain any transmit data, the Transmit Buffer Empty Status (TXBE) bit is set (TXBE = 1), allowing user software or the DMA to load a new byte into the buffer. When the TXBE bit is set and the I2CxCNT register is non-zero (I2CxCNT != 0), the I²C Transmit Interrupt Flag (I2CxTXIF) bit of the PIR registers is set, and can be used as a DMA trigger. A write to I2CxTXB will clear both the TXBE and I2CxTXIF bits. Setting the Clear Buffer (CLRBF) bit clears I2CxTXIF, the I2Cx Receive Buffer (I2CxRXB) and I2CxTXB.

If user software attempts to load I2CxTXB while it is full, the Transmit Write Error Status (TXWE) bit is set, a NACK is generated, and the new data is ignored. If TXWE is set, user software must clear the bit before attempting to load the buffer again.

When module hardware attempts to transfer the contents of I2CxTXB to the transmit shift register while I2CxTXB is empty (TXBE = 1), the Transmit Underflow Status (TXU) bit is set, I2CxTXB is loaded with 0xFF, and a NACK is generated.

Important: A transmit underflow can only occur when clock stretching is disabled (Clock Stretching Disable (CSD) bit = 1). Clock stretching prevents transmit underflows because the clock is stretched after the 8th falling SCL edge, and is only released upon the write of new data into I2CxTXB.

36.3.10 Receive Buffer

The I²C module has a dedicated receive buffer, I2CxRXB, which is independent from the transmit buffer.

Data received through the shift register is transferred to I2CxRXB when the byte is complete. User software or the DMA can access the byte by reading the I2CxRXB register. When new data is loaded into I2CxRXB, the Receive Buffer Full Status (RXBF) bit is set, allowing user software or the DMA to read the new data. When the RXBF bit is set, the I²C Receive Interrupt Flag (I2CxRXIF) bit of the PIR registers is set, and can be used to trigger the DMA. A read of the I2CxRXB register will clear both RXBF and I2CxRXIF bits. Setting the CLRBF bit clears the I2CxRXIF bit, I2CxRXB, and I2CxTXB.

If the buffer is read while empty (RXBF = 0), the Receive Read Error Status (RXRE) bit is set, and the module generates a NACK. User software must clear RXRE to resume normal operation.

When the module attempts to transfer the contents of the receive shift register to I2CxRXB while I2CxRXB is full (RXBF = 1), the Receive Overflow Status (RXO) bit is set, and a NACK is generated. The data currently stored in I2CxRXB remains unchanged, but the data in the receive shift register is lost.

Important: A receive overflow can only occur when clock stretching is disabled. Clock stretching prevents receive overflows because the receive shift register cannot receive any more data until user software or the DMA reads I2CxRXB and the SCL line is released.

36.3.11 Clock Stretching

Clock stretching occurs when a slave device holds the SCL line low to pause bus communication. A slave device may stretch the clock to allow more time to process incoming data, prepare a response for the master device, or to prevent receive overflow or transmit underflow conditions. Clock stretching is enabled by clearing the Clock Stretch Disable (CSD) bit, and is only available in Slave and Multi-Master modes.

When clock stretching is enabled (CSD = 0), the Slave Clock Stretching (CSTR) bit can be used to determine if the clock is currently being stretched. While the slave is actively stretching the clock, CSTR is set by hardware (CSTR = 1). Once the slave has completed its current transaction and clock stretching is no longer required, either module hardware or user software must clear CSTR to release the clock and resume communication.

36.3.11.1 Clock Stretching for Buffer Operations

When enabled (CSD = 0), clock stretching is forced during buffer read/write operations. This allows the slave device time to either load I2CxTXB with transmit data, or read data from I2CxRXB to clear the buffer.

In Slave Receive mode, clock stretching prevents receive data overflows. When the first seven bits of a new byte are received into the receive shift register while I2CxRXB is full (RXBF = 1), slave hardware automatically stretches the clock and sets CSTR. When the slave has read the data in I2CxRXB, slave hardware automatically clears CSTR to release the SCL line and continue communication (see figure below).

Figure 36-9. Receive Buffer Clock Stretching

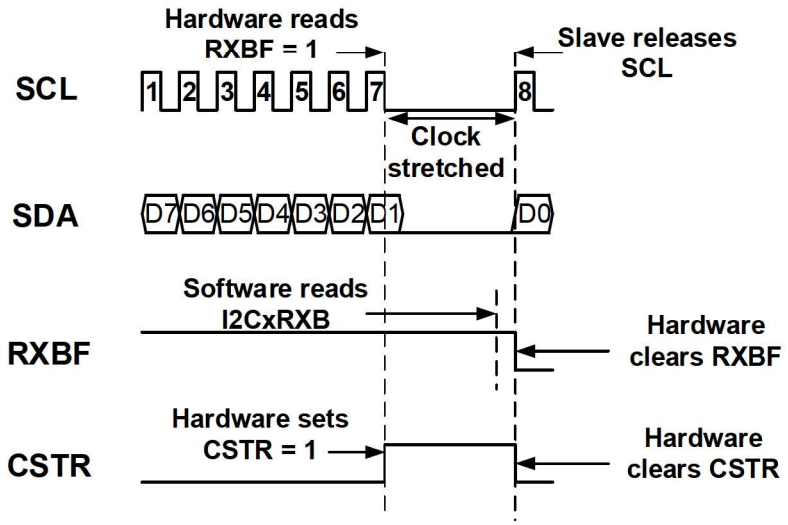

In Slave Transmit mode, clock stretching prevents transmit underflows. When I2CxTXB is empty (TXBE = 1) and the I2CxCNT register is non-zero (I2CxCNT != 0), slave hardware stretches the clock and sets CSTR upon the 8th falling SCL edge. Once the slave has loaded new data into I2CxTXB, slave hardware automatically clears CSTR to release the SCL line and allow further communication (see figure below).

Figure 36-10. Transmit Buffer Clock Stretching

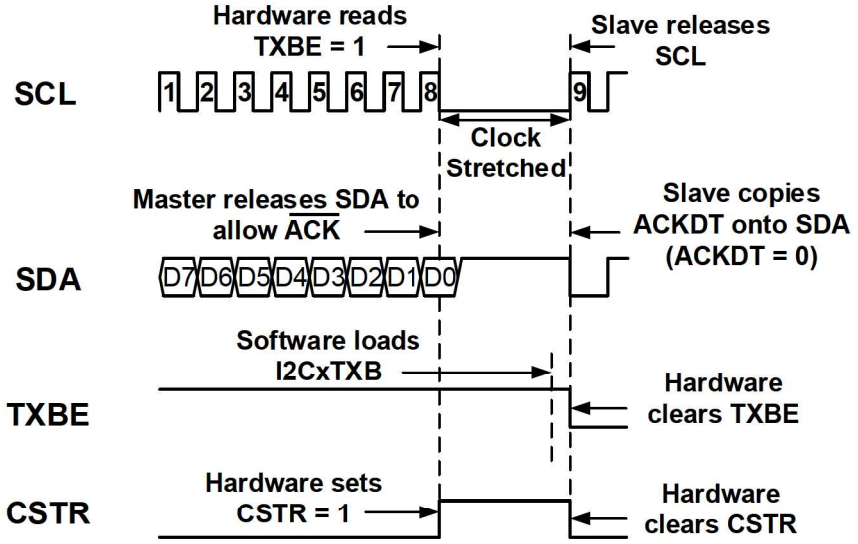

36.3.11.2 Clock Stretching for Other Slave Operations

The I²C module provides three Interrupt and Hold Enable features:

- Address Interrupt and Hold Enable
- Data Write Interrupt and Hold Enable
- Acknowledge Status Time Interrupt and Hold Enable

When clock stretching is enabled (CSD = 0), the Interrupt and Hold Enable features provide an interrupt response, and stretches the clock to allow time for address recognition, data processing, or an $\overline{ACK}$/NACK response.

The Address Interrupt and Hold Enable feature will generate an interrupt event and stretch the SCL line when a matching address is received. This feature is enabled by setting the Address Interrupt and Hold Enable (ADRIE) bit. When enabled (ADRIE = 1), the CSTR bit and the Address Interrupt Flag (ADRIF) bit are set by module hardware, and the SCL line is stretched following the 8th falling SCL edge of a received matching address. Once the slave has completed processing the address, software determines whether to send an $\overline{ACK}$ or a NACK back to the master device. Slave software must clear both the ADRIF and CSTR bits to resume communication.

Important: In 10-bit Slave Addressing mode, clock stretching occurs only after the slave receives a matching low address byte, or a matching high address byte with the R/$\overline{W}$ bit = 1 (Master read) while the Slave Mode Active (SMA) bit is set (SMA = 1). Clock stretching does not occur after the slave receives a matching high address byte with the R/$\overline{W}$ bit = 0 (Master write).

The Data Write Interrupt and Hold Enable feature provides an interrupt event and stretches the SCL signal after the slave receives a data byte. This feature is enabled by setting the Data Write Interrupt and Hold Enable (WRIE) bit. When enabled (WRIE = 1), module hardware sets both the CSTR bit and the Data Write Interrupt Flag (WRIF) bit and stretches the SCL line after the 8th falling edge of SCL. Once the slave has read the new data, software determines whether to send an $\overline{ACK}$ or a NACK back to the master device. Slave software must clear both the CSTR and WRIF bits to resume communication.

The Acknowledge Status Time Interrupt and Hold Enable feature generates an interrupt event and stretches the SCL line after the acknowledgement phase of a transaction. This feature is enabled by setting the Acknowledge Status Time Interrupt and Hold Enable (ACKTIE) bit. When enabled (ACKTIE = 1), module hardware sets the CSTR bit and the Acknowledge Status Time Interrupt Flag (ACKTIF) bit and stretches the clock after the 9th falling edge of SCL for

all address, read, or write operations. Slave software must clear both the ACKTIF and CSTR bits to resume communication.

36.3.12 Data Byte Count

The data byte count refers to the number of data bytes in a complete I²C packet. The data byte count does not include address bytes. The I2C Byte Count (I2CxCNT) register is used to specify the length, in bytes, of the complete transaction. The value loaded into I2CxCNT will be decremented by module hardware each time a data byte is transmitted or received by the module.

Important: The I2CxCNT register will not decrement past a zero value.

When a byte transfer causes the I2CxCNT register to decrement to '0', the Byte Count Interrupt Flag (CNTIF) bit is set, and if the Byte Count Interrupt Enable (CNTIE) is set, the general purpose I2C Interrupt Flag (I2CxIF) bit of the Peripheral Interrupt Registers (PIR) is also set. If the I2C Interrupt Enable (I2CxIE) bit of the Peripheral Interrupt Enable (PIE) registers is set, module hardware will generate an interrupt event.

Important: The I2CxIF bit is read-only and can only be cleared by clearing all the interrupt flag bits of the I2CxPIR register.

The I2CxCNT register can be read at any time, but it is recommended that a double read is performed to ensure a valid count value.

The I2CxCNT register can be written to; however, care is required to prevent register corruption. If the I2CxCNT register is written to during the 8th falling SCL edge of a reception, or during the 9th falling SCL edge of a transmission, the register value may be corrupted. In Slave mode, I2CxCNT can be safely written to any time the clock is not being stretched (CSTR = 0), or after a Stop condition has been received (Stop Condition Interrupt Flag (PCIF) = 1). In Master mode, I2CxCNT can be safely written to any time the Master Data Ready (MDR) or Bus Free (BFRE) bits are set. If the I²C packet is longer than 65,536 bytes, the I2CxCNT register can be updated mid-message to prevent the count from reaching zero; however, the preventative measures listed above must be followed.

When in either Slave Read or Master Write mode and the I2CxCNT value is non-zero (I2CxCNT != 0), the value of the ACKDT bit is used as the acknowledgement response. When I2CxCNT reaches zero (I2CxCNT = 0), the value of the Acknowledge End of Count (ACKCNT) bit is used for the acknowledgement response.

In Master read or write operations, when the I2CxCNT register is clear (I2CxCNT = 0) and the Restart Enable (RSEN) bit is clear, master hardware automatically generates a Stop condition upon the 9th falling edge of SCL. When I2CxCNT is clear (I2CxCNT = 0) and RSEN is set (RSEN = 1), master hardware will stretch the clock while it waits for the Start (S) bit to be set (S = 1). When the Start bit has been set, module hardware transmits a Restart condition followed by the address of the slave it wishes to communicate with.

36.3.12.1 Auto-Load I2CxCNT

The I2CxCNT register can be automatically loaded. Auto-loading of the I2CxCNT register is enabled when the Auto-Load I²C Count Register Enable (ACNT) bit is set (ACNT = 1).

In master transmit mode, the first two bytes following either the 7-bit or 10-bit slave address are transferred from I2CxTXB into both I2CxCNT and the transmit shift register.

Important: When using the auto-load feature in any transmit mode (Slave, Master, Multi-Master), the first of the two bytes following the address is the I2CxCNT register's high byte, followed by the I2CxCNT register's low byte. If the order of these two bytes is switched, the value loaded into the I2CxCNT register will not be correct.

In master reception mode, the first two bytes received from the slave are loaded into both I2CxCNT and I2CxRXB. The value of the Acknowledge Data (ACKDT) bit is used as the master's acknowledgement response to prevent a false NACK from being generated before the I2CxCNT register is updated with the new count value.

In slave reception mode, the first two bytes received after a receiving a matching 7-bit or 10-bit address are loaded into both I2CxCNT and I2CxRXB, and the value of the ACKDT bit is used as the slave's acknowledgement response.

In slave transmit mode, the first two bytes loaded into I2CxTXB following the reception of a matching 7-bit or 10-bit address are transferred into both I2CxCNT and the transmit shift register.

Important: It is not necessary to preload the I2CxCNT register when using the auto-load feature. If no value is loaded by the 9th falling SCL edge following an address transmission or reception, the Byte Count Interrupt Flag (CNTIF) will be set by module hardware, and must be cleared by software to prevent an interrupt event before I2CxCNT is updated. Alternatively, I2CxCNT can be preloaded with a non-zero value to prevent the CNTIF from being set. In this case, the preloaded value will be overwritten once the new count value has been loaded into I2CxCNT.

36.3.13 DMA Integration

The I^2C module can be used with the DMA for data transfers. The DMA can be triggered through software via the DMA Transaction (DGO) bit, or through the use of the following hardware triggers:

- I^2C Transmit Interrupt Flag (I2CxTXIF)
- I^2C Receive Interrupt Flag (I2CxRXIF)
- I^2C Interrupt Flag (I2CxIF)
- I^2C Error Interrupt Flag (I2CxEIF)

For I^2C communication, the I2CxTXIF is commonly used as the hardware trigger source for master or slave transmission, and I2CxRXIF is commonly used as the hardware trigger source for master or slave reception.

36.3.13.1 7-Bit Master Transmission

When address buffers are enabled (ABD = 0), I2CxADB1 is loaded with the slave address, and I2CxCNT is loaded with a count value. At this point, I2CxTXB does not contain data, and the Transmit Buffer Empty (TXBE) bit is set (TXBE= 1). The I2CxTXIF bit is not set since it can only be set when the Master Mode Active (MMA) and TXBE bits are set. Once software sets the Start (S) bit, the MMA bit is set, and hardware transmits the slave address. Upon the 8th falling SCL edge, since TXBE = 1, the Master Data Request (MDR) and I2CxTXIF bits are set, and hardware stretches the clock while the DMA loads I2CxTXB with data. Once the DMA loads I2CxTXB, the TXBE, MDR, and I2CxTXIF bits are cleared by hardware, and the DMA waits for the next occurrence of I2CxTXIF being set.

When address buffers are disabled (ABD = 1), software must load I2CxTXB with the slave address to begin transmission. This is because I2CxTXIF can only be set when MMA = 1, and since a Start has not occurred, MMA = 0. Once the address has been transmitted, I2CxTXIF will be set, triggering the DMA to load I2CxTXB with data.

36.3.13.2 10-Bit Master Transmission

When address buffers are enabled (ABD = 0), I2CxADB1 is loaded with the slave high address, I2CxADB0 is loaded with the slave low address, and I2CxCNT is loaded with a count value. Once software sets the Start (S) bit, the MMA bit is set, and hardware transmits the 10-bit slave address. Upon the 8th falling SCL edge of the transmitted address low byte, since TXBE = 1, the MDR and I2CxTXIF bits are set, and hardware stretches the clock while the DMA loads I2CxTXB with data. Once the DMA loads I2CxTXB, the TXBE, MDR, and I2CxTXIF bits are cleared by hardware, and the DMA waits for the next occurrence of I2CxTXIF being set.

When address buffers are disabled (ABD = 1), software must load I2CxTXB with the slave high address to begin transmission. Once the slave high address has been transmitted, I2CxTXIF will be set, triggering the DMA to load I2CxTXB with slave low address. Once the DMA loads I2CxTXB with the slave low address, the TXBE, MDR, and I2CxTXIF bits are cleared by hardware, and the DMA waits for the next occurrence of I2CxTXIF being set.

36.3.13.3 7/10-Bit Master Reception

In both 7-bit and 10-bit master receive modes, the state of the ABD bit is ignored. Once the complete 7-bit or 10-bit address has been received by the slave, the slave will transmit a data byte. Once the byte has been received by the

master, hardware sets the I2CxRXIF bit, which triggers the DMA to read I2CxRXB. Once the DMA has read I2CxRXB, I2CxRXIF is cleared by hardware and the DMA waits for the next occurrence of I2CxRXIF being set.

36.3.13.4 7-Bit Slave Transmission

In 7-bit slave transmission mode, the state of ABD is ignored. If the slave receives the matching 7-bit address and TXBE is set, I2CxTXIF is set by hardware, triggering the DMA to load data into I2CxTXB. Once the data is transmitted from I2CxTXB, I2CxTXIF is set by hardware, triggering the DMA to once again load I2CxTXB with data. The DMA will continue to load data into I2CxTXB until I2CxCNT reaches a zero value. Once I2CxCNT reaches zero and the data is transmitted from I2CxTXB, I2CxTXIF will not be set, and the DMA will stop loading data.

36.3.13.5 10-Bit Slave Transmission

In 10-bit slave transmission mode, the state of ABD is ignored. If there is no data in I2CxTXB after the slave has received the address high byte with the R/$\overline{W}$ bit set, hardware sets I2CxTXIF, triggering the DMA to load I2CxTXB. The DMA will continue to load data into I2CxTXB until I2CxCNT reaches a zero value. Once I2CxCNT reaches zero and the data is transmitted from I2CxTXB, I2CxTXIF will not be set, and the DMA will stop loading data.

36.3.13.6 7/10-Bit Slave Reception

When address buffers are enabled (ABD = 0), slave hardware loads I2CxADB0/1 with the matching address, while all data is received by I2CxRXB. Once the slave loads I2CxRXB with a received data byte, hardware sets I2CxRXIF, which triggers the DMA to read I2CxRXB. The DMA will continue to read I2CxRXB whenever I2CxRXIF is set.

When address buffers are disabled (ABD = 1), the slave loads I2CxRXB with the matching address byte(s) as they are received. Each received address byte sets I2CxRXIF, which triggers the DMA to read I2CxRXB. The DMA will continue to read I2CxRXB whenever I2CxRXIF is set.

36.3.14 Interrupts

The I^2C module offers several interrupt features designed to assist with communication functions. The interrupt hardware contains four high-level interrupts and several condition-specific interrupts.

36.3.14.1 High-Level Interrupts

Module hardware provides four high-level interrupts:

- Transmit
- Receive
- General Purpose
- Error

These flag bits are read-only bits, and cannot be cleared by software.

The I2C Transmit Interrupt Flag (I2CxTXIF) bit is set when the I2CxCNT register is non-zero (I2CxCNT != 0), and the transmit buffer, I2CxTXB, is empty as indicated by the Transmit Buffer Empty Status (TXBE) bit (TXBE = 1). If the I2C Transmit Interrupt Enable (I2CxTXIE) bit is set, an interrupt event will occur when the I2CxTXIF bit becomes set. Writing new data to I2CxTXB, or setting the Clear Buffer (CLRBF) bit, will clear the interrupt condition. The I2CxTXIF bit is also used by the DMA as a trigger source.

Important: I2CxTXIF can only be set when either the Slave Mode Active (SMA) or Master Mode Active (MMA) bits are set, and the I2CxCNT register is non-zero (I2CxCNT != 0). The SMA bit is only set after an address has been successfully acknowledged by a slave device, which prevents false interrupts from being triggered on address reception. The MMA bit is set once the master completes the transmission of a Start condition.

The I2C Receive Interrupt Flag (I2CxRXIF) bit is set when the receive shift register has loaded new data into the receive buffer, I2CxRXB. When new data is loaded into I2CxRXB, the Receive Buffer Full Status (RXBF) bit is set (RXBF = 1), which also sets I2CxRXIF. If the I2C Receive Interrupt Enable (I2CxRXIE) bit is set, an interrupt event will occur when the I2CxRXIF bit becomes set. Reading data from I2CxRXB, or setting the CLRBF bit, will clear the interrupt condition. The I2CxRXIF bit is also used by the DMA as a trigger source.

Important: I2CxRXIF can only be set when either the Slave Mode Active (SMA) or Master Mode Active (MMA) bits are set.

The I2C Interrupt Flag (I2CxIF) is the general purpose interrupt. I2CxIF is set whenever any of the interrupt flag bits contained in the I2C Peripheral Interrupt Register (I2CxPIR) and the associated interrupt enable bits contained in the I2C Peripheral Interrupt Enable Register (I2CxPIE) are set. If I2CxIF becomes set while the I2C Interrupt Enable (I2CxIE) bit is set, an interrupt event will occur. I2CxIF is cleared by module hardware when all enabled interrupt flag bits in I2CxPIR are clear.

The I2C Error Interrupt Flag (I2CxEIF) is set whenever any of the interrupt flag bits contained in the I2C Error Register (I2CxERR) and their associated interrupt enable bits are set. If I2CxEIF becomes set while the I2C Error Interrupt Enable (I2CxEIE) bit is set, an interrupt event will occur. I2CxEIF is cleared by hardware when all enabled error interrupt flag bits in the I2CxERR register are clear.

36.3.14.2 Condition-Specific Interrupts

In addition to the high-level interrupts, module hardware provides several condition-specific interrupts.

The I2C Peripheral Interrupt Register (I2CxPIR) contains the following interrupt flag bits:

- CNTIF: Byte Count Interrupt Flag
- ACKTIF: Acknowledge Status Time Interrupt Flag
- WRIF: Data Write Interrupt Flag
- ADRIF: Address Interrupt Flag
- PCIF: Stop Condition Interrupt Flag
- RSCIF: Restart Condition Interrupt Flag
- SCIF: Start Condition Interrupt Flag

When any of the flag bits in I2CxPIR become set and the associated interrupt enable bits in I2CxPIE are set, the generic I2CxIF is also set. If the generic I2CxIE bit is set, an interrupt event is generated whenever one of the I2CxPIR flag bits becomes set. If the I2CxIE bit is clear, the I2CxPIR flag bit will still be set by hardware; however, no interrupt event will be triggered.

CNTIF becomes set (CNTIF = 1) when the I2CxCNT register value reaches zero, indicating that all data bytes in the I^2C packet have been transmitted or received. CNTIF is set after the 9th falling SCL edge when I2CxCNT reaches zero (I2CxCNT = 0).

ACKTIF is set (ACKTIF = 1) by the 9th falling edge of SCL for any byte when the device is addressed as a slave in any Slave or Multi-Master mode. If the Acknowledge Interrupt and Hold Enable (ACKTIE) bit is set and ACKTIF becomes set:

- If an $\overline{\text{ACK}}$ is detected, clock stretching is also enabled (CSTR = 1).
- If a NACK is detected, no clock stretching occurs (CSTR = 0).

WRIF is set (WRIF = 1) after the 8th falling edge of SCL when the module receives a data byte in Slave or Multi-Master modes. Once the data byte is received, WRIF is set, as is the Receive Buffer Full Status (RXBF) bit, the I2CxRXIF bit, and if the Data Write Interrupt and Hold Enable (WRIE) bit is set, the generic I2CxIF bit is also set. WRIF is a read/write bit and must be cleared in software, while the RXBF, I2CxRXIF, and I2CxIF bits are read-only and are cleared by reading I2CxRXB or by setting the Clear Buffer bit (CLRBF = 1).

ADRIF is set on the 8th falling edge of SCL after the module has received a matching 7-bit address, after receiving a matching 10-bit upper address byte, and after receiving a matching 10-bit lower address byte in Slave or Multi-Master modes. Upon receiving a matching 7-bit address or 10-bit upper address, the address is copied to I2CxADB0, the R/$\overline{\text{W}}$ bit setting is copied to the Read Information (R) bit, the Data (D) bit is cleared, and the ADRIF bit is set. If the Address Interrupt and Hold Enable (ADRIE) bit is set, I2CxIF is set, and the clock will be stretched while the module determines whether to $\overline{\text{ACK}}$ or NACK the transmitter. Upon receiving the matching 10-bit lower address, the address is copied to I2CxADB1, and the ADRIF bit is set. If ADRIE is also set, the clock is stretched while the module determines the $\overline{\text{ACK}}$/NACK response to return to the transmitter.

PCIF is set whenever a Stop condition is detected on the bus.

RSCIF is set upon the detection of a Restart condition.

SCIF is set upon the detection of a Start condition.

In addition to the I2CxPIR register, the I2C Error (I2CxERR) register contains three interrupt flag bits that are used to detect bus errors. These read/write bits are set by module hardware, but must be cleared by user software. The I2CxERR register also includes the interrupt enable bits for these three error conditions, and when set, will cause an interrupt event whenever the associated interrupt flag bit becomes set.

I2CxERR contains the following interrupt flag bits:

- BTOIF: Bus Time-out Interrupt Flag
- BCLIF: Bus Collision Interrupt Flag
- NACKIF: NACK Detect Interrupt Flag

BTOIF is set when a bus timeout occurs. The bus timeout period is configured using one of the timeout sources selected by the I2C Bus Timeout Clock Source Selection (I2CxBTOC) register.

If the module is configured in Slave mode with TOREC set (TOREC = 1), and a bus timeout event occurs (regardless of the state of the Slave Mode Active (SMA) bit), the module is immediately reset, the SMA and Slave Clock Stretching (CSTR) bits are cleared, and the BTOIF bit is set. If the Bus Timeout Interrupt Enable (BTOIE) bit is set, the generic I2C Error Interrupt Flag (I2CxEIF) bit is set.

If the module is configured in Slave mode with TOREC clear (TOREC = 0), and a bus timeout event occurs (regardless of the state of the Slave Mode Active (SMA) bit), the BTOIF bit is set, but user software must reset the module. If the Bus Timeout Interrupt Enable (BTOIE) bit is set, the generic I2C Error Interrupt Flag (I2CxEIF) bit is set.

If the module is configured in Master mode with TOREC set (TOREC = 1), and the bus timeout event occurs while the Master is active (Master Mode Active (MMA) = 1), the Master Data Ready (MDR) bit is cleared, the module will immediately attempt to transmit a Stop condition, and sets the BTOIF bit. Stop condition generation may be delayed if a slave device is stretching the clock, but will resume once the clock is released, or if the slave holding the bus also has a timeout event occur. The MMA bit is only cleared after the Stop condition has been generated. If the Bus Timeout Interrupt Enable (BTOIE) bit is set, the generic I2C Error Interrupt Flag (I2CxEIF) bit is set.

If the module is configured in Master mode with TOREC clear (TOREC = 0), and the bus timeout event occurs while the Master is active (Master Mode Active (MMA) = 1), the MDR bit is cleared and the BTOIF bit is set, but user software must initiate the Stop condition by setting the P bit. If the Bus Timeout Interrupt Enable (BTOIE) bit is set, the generic I2C Error Interrupt Flag (I2CxEIF) bit is set.

BCLIF is set upon the detection of a bus collision. A bus collision occurs any time the SDA line is sampled at a logic low while the module expects both SCL and SDA lines to be at a high logic level. When a bus collision occurs, BCLIF is set, and if the Bus Collision Detect Interrupt Enable (BCLIE) bit is set, I2CxEIF is also set, and the module is reset.

NACKIF is set when either the master or slave is active (SMA = 1 || MMA = 1) and a NACK response is detected on the bus. A NACK response occurs during the 9th SCL pulse in which the SDA line is released to a logic high. In Master mode, a NACK can be issued when the master has finished receiving data from a slave, or when the master receives incorrect data. In Slave mode, a NACK is issued when the slave does not receive a matching address, or when it receives incorrect data. A NACK can also be automatically issued when any of the following bits become set, which will also set NACKIF and I2CxEIF:

- TXWE: Transmit Write Error Status
- RXRE: Receive Read Error Status
- TXU: Transmit Underflow Status
- RXO: Receive Overflow Status

Important: The I2CxEIF bit is read-only, and is only cleared by hardware after all enabled I2CxERR error flags have been cleared.

36.3.15 Operation in Sleep

The I²C module can operate while in Sleep mode.

In Slave mode, the module can transmit and receive data as long as the system clock source operates in Sleep. If the generic I2C Interrupt Enable (I2CxIE) bit is set and the slave receives or transmits a complete byte, I2CxIF is set and the device wakes up from Sleep.

In Master mode, both the system clock and the selected I2CxCLK source must be able to operate in Sleep. If the I2CxIE bit is set and the I2CxIF bit becomes set, the device wakes from Sleep.

36.4 I²C Operation

All I²C communication is performed in 9-bit segments consisting of an 8-bit address/data segment followed by a 1-bit acknowledgement segment. Address and data bytes are transmitted with the Most Significant bit (MSb) first. Interaction between the I²C module and other devices on the bus is controlled and monitored through several I²C Control, Status, and Interrupt registers.

To begin any I²C communication, mater hardware checks to ensure that the bus is in an Idle state as indicated by the Bus Free Status (BFRE) bit. When BFRE = 1, both SDA and SCL lines are floating to a logic high and the bus is considered 'Idle'. When the master detects an Idle bus, it transmits a Start condition, followed by the address of the slave it intends to communicate with. The slave address can be either 7-bit or 10-bit, depending on the application design.

In 7-bit Addressing mode, the Least Significant bit (LSb) of the 7-bit slave address is reserved for the Read/not Write (R/$\overline{W}$) bit, while in 10-bit Addressing mode, the LSb of the high address byte is reserved as the R/$\overline{W}$ bit. If the R/$\overline{W}$ bit is clear (R/$\overline{W}$ = 0), the master intends to read information from the slave. If R/$\overline{W}$ is set (R/$\overline{W}$ = 1), the master intends to write information to the slave. If the addressed slave exists on the bus, it must respond with an Acknowledgement ($\overline{ACK}$) sequence.

Once a slave has been successfully addressed, the master will continue to receive data from the slave, write data to the slave, or a combination of both. Data is always transmitted Most Significant bit (MSb) first. When the master has completed its transactions, it can either issue a Stop condition, signaling to the slave that communication is to be terminated, or a Restart condition, informing the bus that the current master wishes to hold the bus to communicate with the same or other slave devices.

36.4.1 I²C Slave Mode Operation

The I²C module provides four slave operation modes as selected by the I2C Mode Select (MODE) bits:

- I²C Slave mode with recognition of up to four 7-bit addresses
- I²C Slave mode with recognition of up to two masked 7-bit addresses
- I²C Slave mode with recognition of up to two 10-bit addresses
- I²C Slave mode with recognition of one masked 10-bit address

During operation, the slave device waits until module hardware detects a Start condition on the bus. Once the Start condition is detected, the slave waits for the incoming address information to be received by the receive shift register. The address is then compared to the addresses stored in the I2C Address 0/1/2/3 registers (I2CxADR0, I2CxADR1, I2CxADR2, I2CxADR3), and if an address match is detected, slave hardware transfers the matching address into either the I2CxADB0/I2CxADB1 registers or the I2CxRXB register, depending on the state of the Address Buffer Disable (ABD) bit. If there are no address matches, there is no response from the slave.

36.4.1.1 Slave Addressing Modes

The I2CxADR0, I2CxADR1, I2CxADR2, and I2CxADR3 registers contain the slave's addresses. The first byte (7-bit mode) or first and second bytes (10-bit mode) following a Start or Restart condition are compared to the values stored in the I2CxADR registers (see figure below). If an address match occurs, the valid address is transferred to the I2CxADB0/I2CxADB1 registers or I2CxRXB register, depending on the addressing mode and the state of the ABD bit.

Table 36-2. I²C Address Registers

Mode	I2CxADR0	I2CxADR1	I2CxADR2	I2CxADR3
7-bit	7-bit address	7-bit address	7-bit address	7-bit address

7-bit w/ masking	7-bit address	7-bit mask for I2CxADR0	7-bit address	7-bit mask for I2CxADR2
10-bit	Address low byte	Address high byte	Address low byte	Address high byte
10-bit w/ masking	Address low byte	Address high byte	Address low byte mask	Address high byte mask

In 7-bit Address mode, the received address byte is compared to all four I2CxADR registers independently to determine a match. The R/$\overline{W}$ bit is ignored during address comparison. If a match occurs, the matching received address is transferred from the receive shift register to either the I2CxADB0 register (when ABD = 0) or to the I2CxRXB register (when ABD = 1), and the value of the R/$\overline{W}$ bit is loaded into the Read Information (R) bit.

In 7-bit Address with Masking mode, I2CxADR0 holds one slave address and I2CxADR1 holds the mask value for I2CxADR0, while I2CxADR2 holds a second slave address and I2CxADR3 holds the mask value for I2CxADR2. A zero bit in a mask register means that the associated bit in the address register is a 'don't care', which means that the particular address bit is not used in the address comparison between the received address in the shift register and the address stored in either I2CxADR0 or I2CxADR2 (see figure below).

Figure 36-11. 7-Bit Address with Masking Example

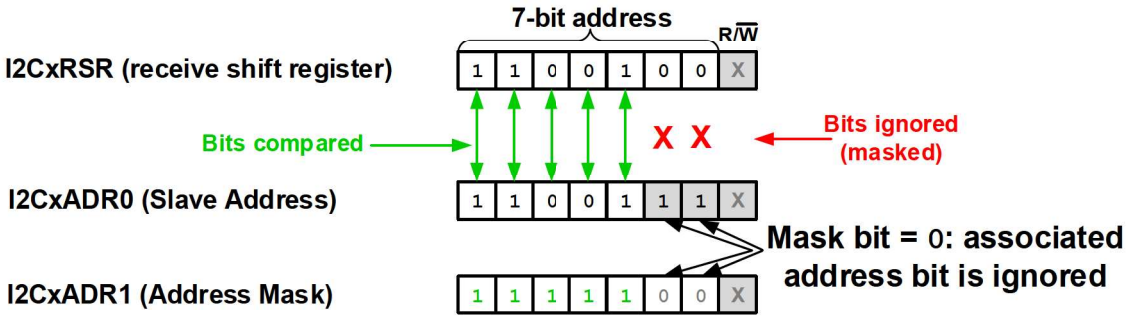

In 10-bit Address mode, I2CxADR0 and I2CxADR1, and I2CxADR2 and I2CxADR3, are combined to create two 10-bit addresses. I2CxADR0 and I2CxADR2 hold the lower eight bits of the address, while I2CxADR1 and I2CxADR3 hold the upper two bits of the address, the R/$\overline{W}$ bit, and the five-digit '11110' code assigned to the five Most Significant bits of the high address byte.

Important: The '11110' code is specified by the I^{2}C Specification, but is not supported by Microchip. It is up to the user to ensure the correct bit values are loaded into the address high byte. If a master device has included the five-digit code in the address it intends to transmit, the slave must also include those bits in slave address.

The upper received address byte is compared to the values in I2CxADR1 and I2CxADR3, and if a match occurs, the address is stored in either I2CxADB1 (when ABD = 0) or in I2CxRXB (when ABD = 1), and the value of the R/$\overline{W}$ bit is transferred into the R bit. The lower received address byte is compared to the values in I2CxADR0 and I2CxADR2, and if a match occurs, the address is stored in either I2CxADB0 (when ABD = 0) or in I2CxRXB (when ABD = 1).

In 10-bit Address with Masking mode, I2CxADR0 and I2CxADR1 are combined to form the 10-bit address, while I2CxADR2 and I2CxADR3 are combined to form the 10-bit mask. The upper received address byte is compared to the masked value in I2CxADR1, and if a match occurs, the address is stored in either I2CxADB1 (when ABD = 0) or in I2CxRXB (when ABD = 1), and the value of the R/$\overline{W}$ bit is transferred into the R bit. The lower received address byte is compared to the value in I2CxADR0, and if a match occurs, the address is stored in either I2CxADB0 (when ABD = 0) or in I2CxRXB (when ABD = 1).

36.4.1.2 General Call Addressing Support

The I²C Specification reserves the address 0x00 as the General Call address. The General Call address is used to address all slave modules connected to the bus at the same time. When a master issues a General Call, all slave devices should, in theory, respond with an $\overline{ACK}$. The General Call Enable (GCEN) bit determines whether slave hardware will respond to a General Call address. When GCEN is set (GCEN = 1), slave hardware will respond to a General Call with an $\overline{ACK}$, and when GCEN is clear (GCEN = 0), the General Call is ignored, and the slave responds with a NACK.

When the module receives a General Call, the ADRIF bit is set and the address is stored in I2CxADB0. If the ADRIE bit is set, the module will generate an interrupt and stretch the clock after the 8th falling edge of SCL. This allows the slave to determine the acknowledgement response to return to the master (see figure below).

Important: When using the General Call addressing feature, loading the I2CxADR0/1/2/3 registers with the 0x00 address is not recommended. Additionally, slave hardware only supports General Call addressing in 7-bit Addressing modes.

Figure 36-12. General Call Addressing

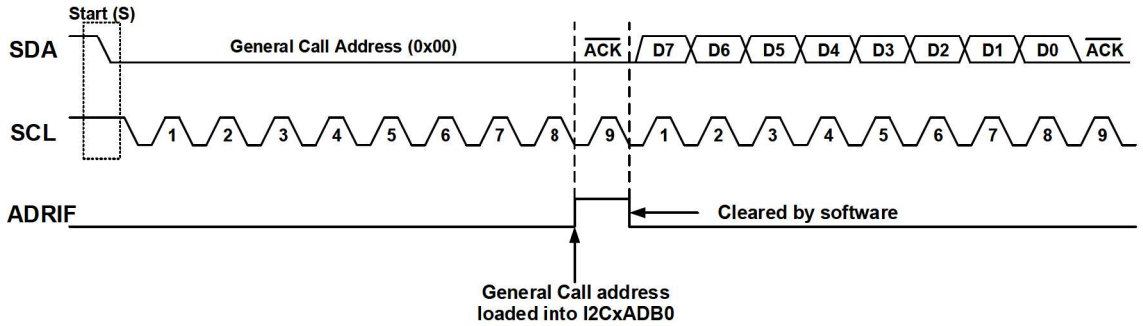

36.4.1.3 Slave Operation in 7-Bit Addressing Modes

The upper seven bits of an address byte are used to determine a slave's address, while the LSb of the address byte is reserved as the Read/not Write (R/$\overline{W}$) bit. When R/$\overline{W}$ is set (R/$\overline{W}$ = 1), the master device intends to read data from the slave. When R/$\overline{W}$ is clear (R/$\overline{W}$ = 0), the master device intends to write data to the slave. When an address match occurs, the R/$\overline{W}$ bit is copied to the Read Information (R) bit, and the 7-bit address is copied to I2CxADB0.

36.4.1.3.1 Slave Transmission (7-bit Addressing Mode)

The following section describes the sequence of events that occur when the module is transmitting data in 7-bit Addressing mode:

1. The master device issues a Start condition. Once the Start condition has been detected, slave hardware sets the Start Condition Interrupt Flag (SCIF) bit. If the Start Condition Interrupt Enable (SCIE) bit is also set, the generic I2CxIF is also set.
2. Master hardware transmits the 7-bit slave address with the R/$\overline{W}$ bit set, indicating that it intends to read data from the slave.
3. The received address is compared to the values in the I2CxADR registers. If the slave is configured in 7-bit Addressing mode (no masking), the received address is independently compared to each of the I2CxADR0/1/2/3 registers. In 7-bit Addressing with Masking mode, the received address is compared to the masked value of I2CxADR0 and I2CxADR2.
   If an address match occurs:
   - The Slave Mode Active (SMA) bit is set by module hardware.
   - The R/$\overline{W}$ bit value is copied to the Read Information (R) bit by module hardware.
   - The Data (D) bit is cleared by hardware, indicating the last received byte was an address.

- The Address Interrupt Flag (ADRIF) bit is set. If the Address Interrupt and Hold Enable (ADRIE) bit is set, and the Clock Stretching Disable (CSD) bit is clear, hardware sets the Slave Clock Stretching (CSTR) bit and the generic I2CxIF bit. This allows time for the slave to read either I2CxADB0 or I2CxRXB and selectively $\overline{\text{ACK}}$/NACK based on the received address. When the slave has finished processing the address, software must clear CSTR to resume operation.
- The matching received address is loaded into either the I2CxADB0 register or into the I2CxRXB register as determined by the Address Buffer Disable (ABD) bit. When ABD is clear (ABD = 0), the matching address is copied to I2CxADB0. When ABD is set (ABD = 1), the matching address is copied to I2CxRXB, which also sets the Receive Buffer Full Status (RXBF) bit and the I2C Receive Interrupt Flag (I2CxRXIF) bit. I2CxRXIF is a read-only bit, and must be cleared by either reading I2CxRXB or by setting the Clear Buffer (CLRBF) bit (CLRBF = 1).

If no address match occurs, the module remains idle.

4. If the Transmit Buffer Empty Status (TXBE) bit is set (TXBE = 1), I2CxCNT has a non-zero value (I2CxCNT != 0), and the I2C Transmit Interrupt Flag (I2CxTXIF) is set (I2CxTXIF = 1), slave hardware sets CSTR, stretches the clock (when CSD = 0), and waits for software to load I2CxTXB with data. I2CxTXB must be loaded to clear I2CxTXIF. Once data is loaded into I2CxTXB, hardware automatically clears CSTR to resume communication.
5. The master device transmits the 9th clock pulse, and slave hardware transfers the value of the ACKDT bit onto the SDA line. If there are pending errors, such as a receive overflow (RXO = 1), slave hardware automatically generates a NACK condition. NACKIF is set, and the module goes idle.
6. Upon the 9th falling SCL edge, the data byte in I2CxTXB is transferred to the transmit shift register, and I2CxCNT is decremented by one. Additionally, the Acknowledge Status Time Interrupt Flag (ACKTIF) bit is set. If the Acknowledge Status Time Interrupt and Hold Enable (ACKTIE) bit is also set, the generic I2CxIF is set, and if slave hardware generated an $\overline{\text{ACK}}$, the CSTR bit is also set and the clock is stretched (when CSD = 0). If a NACK was generated, the CSTR bit remains unchanged. Once complete, software must clear CSTR and ACKTIF to release the clock and continue operation.
7. If the slave generated an $\overline{\text{ACK}}$ and I2CxCNT is non-zero, master hardware transmits eight clock pulses, and slave hardware begins to shift the data byte out of the shift register starting with the Most Significant bit (MSb).
8. After the 8th falling edge of SCL, slave hardware checks the status of TXBE and I2CxCNT. If TXBE is set and I2CxCNT has a non-zero count value, hardware sets CSTR and the clock is stretched (when CSD = 0) until software loads I2CxTXB with new data. Once I2CxTXB has been loaded, hardware clears TXBE, I2CxTXIF, and CSTR to resume communication.
9. Once the master hardware clocks in all eight data bits, it transmits the 9th clock pulse along with the $\overline{\text{ACK}}$/NACK response back to the slave. Slave hardware copies the $\overline{\text{ACK}}$/NACK value to the Acknowledge Status (ACKSTAT) bit and sets ACKTIF. If ACKTIE is also set, slave hardware sets the generic I2CxIF bit and CSTR, and stretches the clock (when CSD = 0). Software must clear CSTR to resume operation.
10. After the 9th falling edge of SCL, data currently loaded in I2CxTXB is transferred to the transmit shift register, setting both TXBE and I2CxTXIF. I2CxCNT is decremented by one. If I2CxCNT is zero (I2CxCNT = 0), CNTIF is set.
11. If I2CxCNT is non-zero and the master issued an $\overline{\text{ACK}}$ on the last byte (ACKSTAT = 0), the master transmits eight clock pulses, and slave hardware begins to shift data out of the shift register.
12. Repeat steps 8 – 11 until the master has received all the requested data (I2CxCNT = 0). Once all data has been received, the master issues a NACK, followed by either a Stop or Restart condition. Once the NACK has been received by the slave, hardware sets NACKIF and clears SMA. If the NACK Detect Interrupt Enable (NACKIE) bit is also set, the generic I2C Error Interrupt Flag (I2CxEIF) is set. If the master issued a Stop condition, slave hardware sets the Stop Condition Interrupt Flag (PCIF). If the master issued a Restart condition, slave hardware sets the Restart Condition Interrupt Flag (RSCIF). If the associated interrupt enable bits are also set, the generic I2CxIF is also set.

Important: I2CxEIF is read-only, and is cleared by hardware when all enable interrupt flag bits in I2CxERR are cleared.

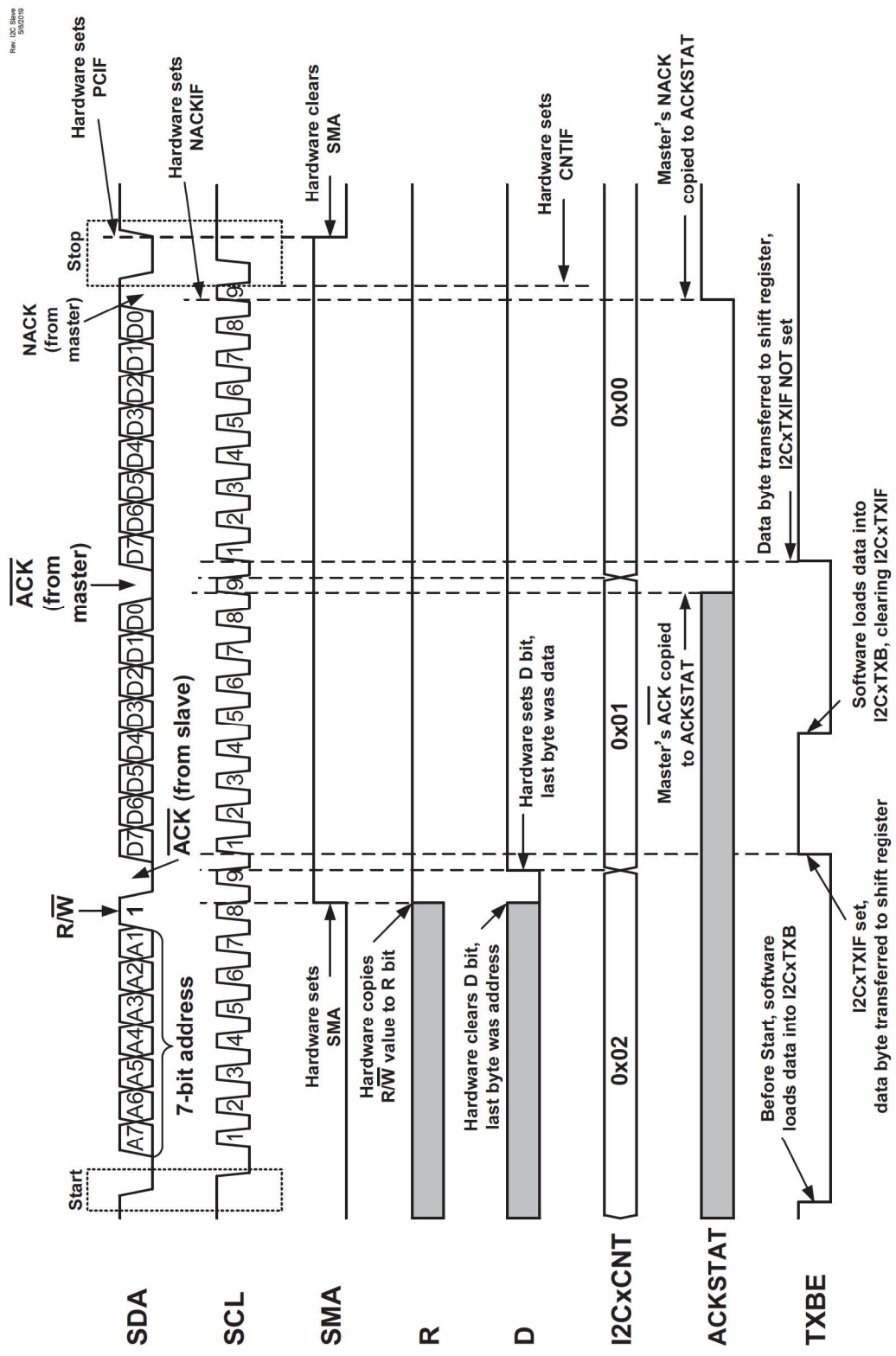

Figure 36-13. 7-Bit Slave Mode Transmission (No Clock Stretching)

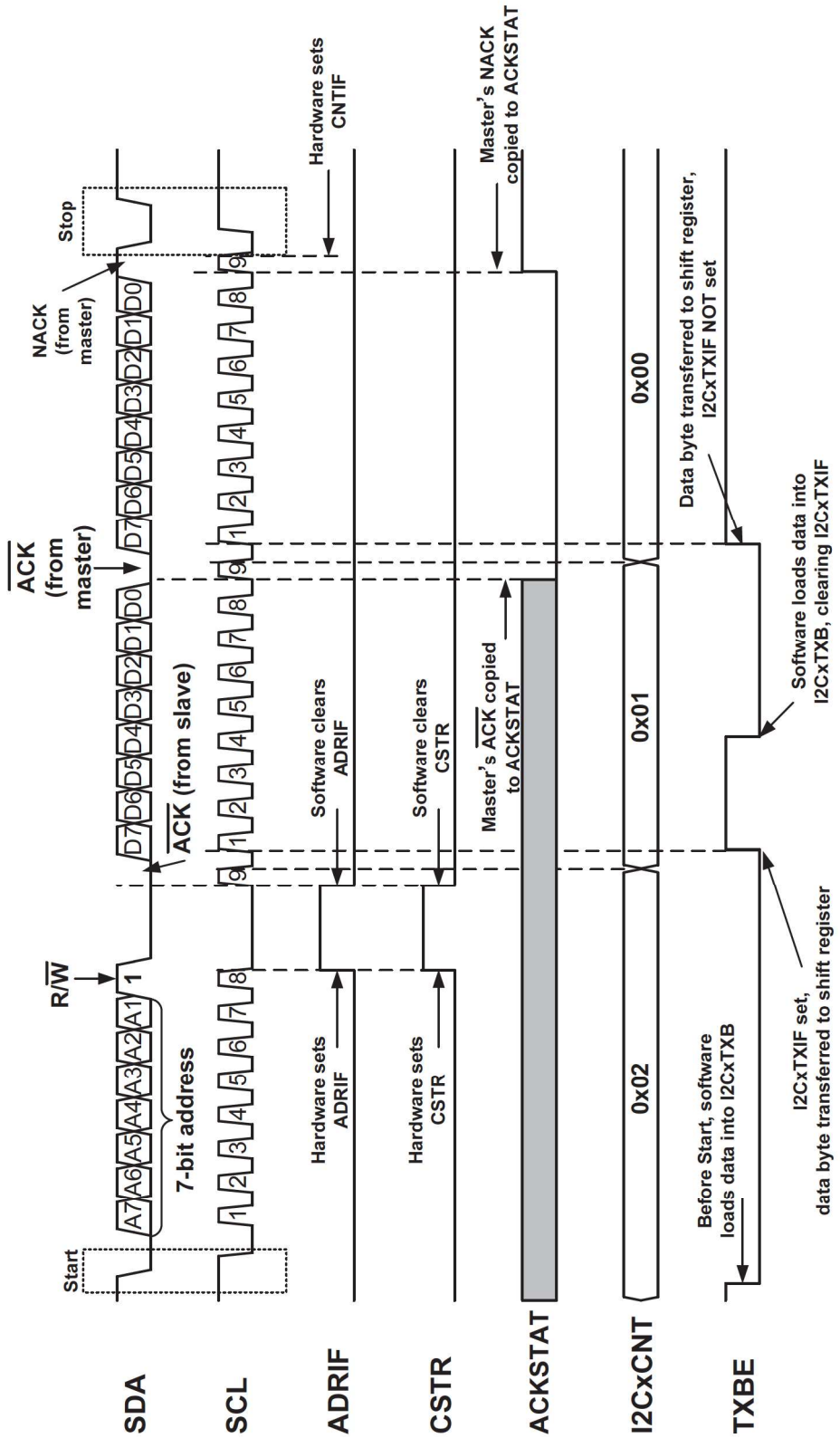

Figure 36-14. 7-Bit Slave Mode Transmission (ADRIE = 1)

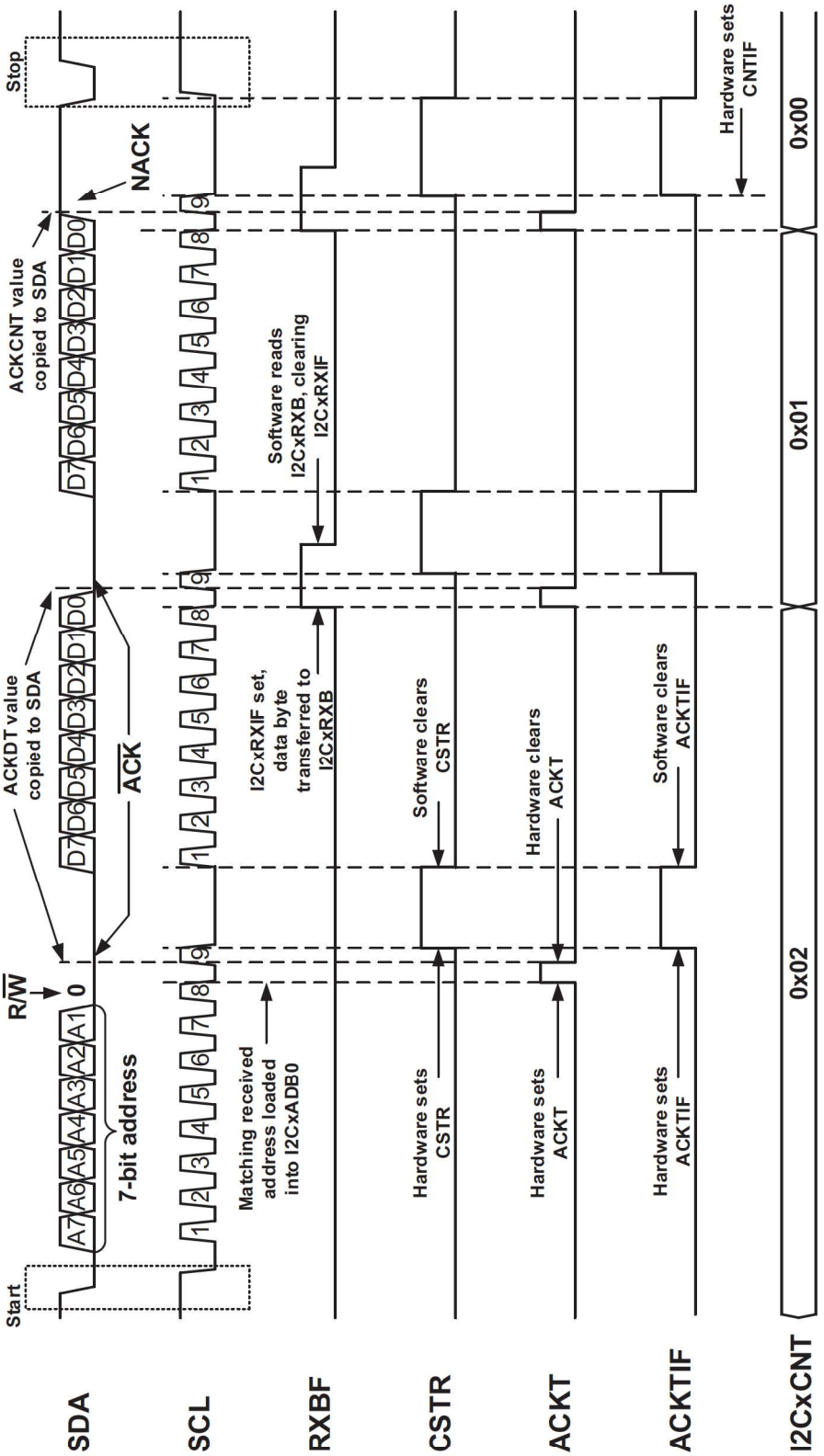

Figure 36-15. 7-Bit Slave Mode Transmission (ACKTIE = 1)

36.4.1.3.2 Slave Reception (7-Bit Addressing Mode)

The following section describes the sequence of events that occur when the module is receiving data in 7-bit Addressing mode:

1. The master issues a Start condition. Once the Start is detected, slave hardware sets the Start Condition Interrupt Flag (SCIF) bit. If the Start Condition Interrupt Enable (SCIE) bit is also set, the generic I2CxIF bit is also set.
2. The master transmits the 7-bit slave address with the R/$\overline{W}$ bit clear, indicating that it intends to write data to the slave.
3. The received address is compared to the values in the I2CxADR registers. If the slave is configured in 7-bit Addressing mode (no masking), the received address is independently compared to each of the I2CxADR0/1/2/3 registers. In 7-bit Addressing with Masking mode, the received address is compared to the masked value of I2CxADR0 and I2CxADR2.
   If an address match occurs:
   - The Slave Mode Active (SMA) bit is set by module hardware.
   - The R/$\overline{W}$ bit value is copied to the Read Information (R) bit by module hardware.
   - The Data (D) bit is cleared (D = 0) by hardware, indicating the last received byte was an address.
   - The Address Interrupt Flag (ADRIF) bit is set (ADRIF = 1). If the Address Interrupt and Hold Enable (ADRIE) bit is set (ADRIE = 1), and the Clock Stretching Disable (CSD) bit is clear (CSD = 0), hardware sets the Slave Clock Stretching (CSTR) bit and the generic I2CxIF bit. This allows time for the slave to read either I2CxADB0 or I2CxRXB and selectively $\overline{ACK}$/NACK based on the received address. When the slave has finished processing the address, software must clear CSTR to resume operation.
   - The matching received address is loaded into either the I2CxADB0 register or into the I2CxRXB register as determined by the Address Buffer Disable (ABD) bit. When ABD is clear (ABD = 0), the matching address is copied to I2CxADB0. When ABD is set (ABD = 1), the matching address is copied to I2CxRXB, which also sets the Receive Buffer Full Status (RXBF) bit and the I2C Receive Interrupt Flag (I2CxRXIF) bit. I2CxRXIF is a read-only bit, and must be cleared by either reading I2CxRXB or by setting the Clear Buffer (CLRBF) bit (CLRBF = 1).

   If no address match occurs, the module remains idle.
4. The master device transmits the 9th clock pulse, and slave hardware transfers the value of the ACKDT bit onto the SDA line. If there are pending errors, such as a receive overflow (RXO = 1), slave hardware automatically generates a NACK condition. NACKIF is set, and the module goes idle.
5. Upon the 9th falling SCL edge, the Acknowledge Status Time Interrupt Flag (ACKTIF) bit is set. If the Acknowledge Interrupt and Hold Enable (ACKTIE) bit is also set, the generic I2CxIF is set, and if slave hardware generated an $\overline{ACK}$, the CSTR bit is also set and the clock is stretched (when CSD = 0). If a NACK was generated, the CSTR bit remains unchanged. Once complete, software must clear CSTR and ACKTIF to release the clock and continue operation.
6. If slave hardware generated a NACK, master hardware generates a Stop condition, the Stop Condition Interrupt Flag (PCIF) bit is set when slave hardware detects the Stop condition, and the slave goes idle. If an $\overline{ACK}$ was generated, master hardware transmits the first seven bits of the 8-bit data byte.
7. If data remains in I2CxRXB (RXBF = 1 and I2CxRXIF = 1) when the first seven bits of the new byte are received by the shift register, CSTR is set, and if CSD is clear, the clock is stretched after the 7th falling edge of SCL. This allows time for the slave to read I2CxRXB, which clears RXBF and I2CxRXIF, and prevents a receive buffer overflow. Once RXBF and I2CxRXIF are cleared, hardware releases SCL.
8. Master hardware transmits the 8th bit of the current data byte into the slave receive shift register. Slave hardware then transfers the complete byte into I2CxRXB on the 8th falling edge of SCL, and sets the following bits:
   - I2CxRXIF
   - I2CxIF
   - Data Write Interrupt Flag (WRIF)
   - Data (D)
   - RXBF

   I2CxCNT is decremented by one. If the Data Write Interrupt and Hold Enable (WRIE) is set (WRIE = 1), hardware sets CSTR (when CSD = 0) and stretches the clock, allowing time for slave software to read

I2CxRXB and determine the state of the ACKDT bit that is transmitted back to the master. Once the slave determines the Acknowledgement response, software clears CSTR to allow further communication.

9. Master hardware transmits the 9th clock pulse. If there are pending errors, such as receive buffer overflow, slave hardware automatically generates a NACK condition, sets NACKIF, and the module goes idle. If I2CxCNT is non-zero (I2CxCNT != 0), slave hardware transmits the value of ACKDT as the acknowledgement response to the master. It is up to software to configure ACKDT appropriately. In most cases, the ACKDT bit should be clear (ACKDT = 0) so that the master receives an $\overline{\text{ACK}}$ response (logic low level on SDA during the 9th clock pulse).
   If I2CxCNT is zero (I2CxCNT = 0), slave hardware transmits the value of the Acknowledge End of Count (ACKCNT) bit as the Acknowledgement response, rather than the value of ACKDT. It is up to software to configure ACKCNT appropriately. In most cases, ACKCNT should be set (ACKCNT = 1), which represents a NACK condition. When master hardware detects a NACK on the bus, it will generate a Stop condition. If ACKCNT is clear (ACKCNT = 0), an $\overline{\text{ACK}}$ will be issued, and master hardware will not issue a Stop condition.
10. Upon the 9th falling edge of SCL, the ACKTIF bit is set. If ACKTIE is also set, the generic I2CxIF is set, and if CSD is clear, slave hardware sets CSTR and stretches the clock. This allows time for software to read I2CxRXB. Once complete, software must clear both CSTR and ACKTIF to release the clock and continue communication.
11. Repeat steps 6 -10 until the master has transmitted all the data (I2CxCNT = 0), or until the master issues a Stop or Restart condition.

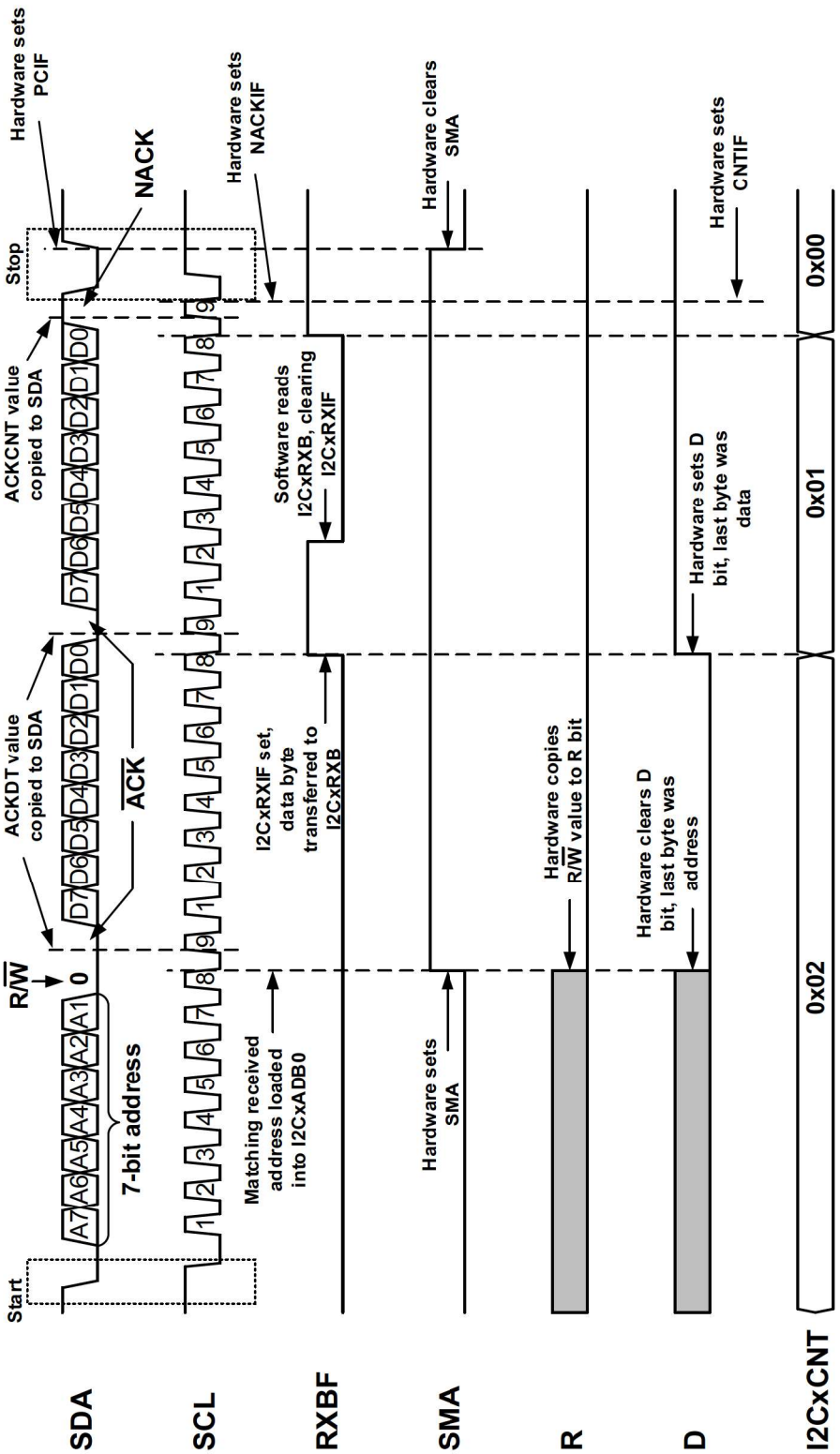

Figure 36-16. 7-Bit Slave Mode Reception (No Clock Stretching)

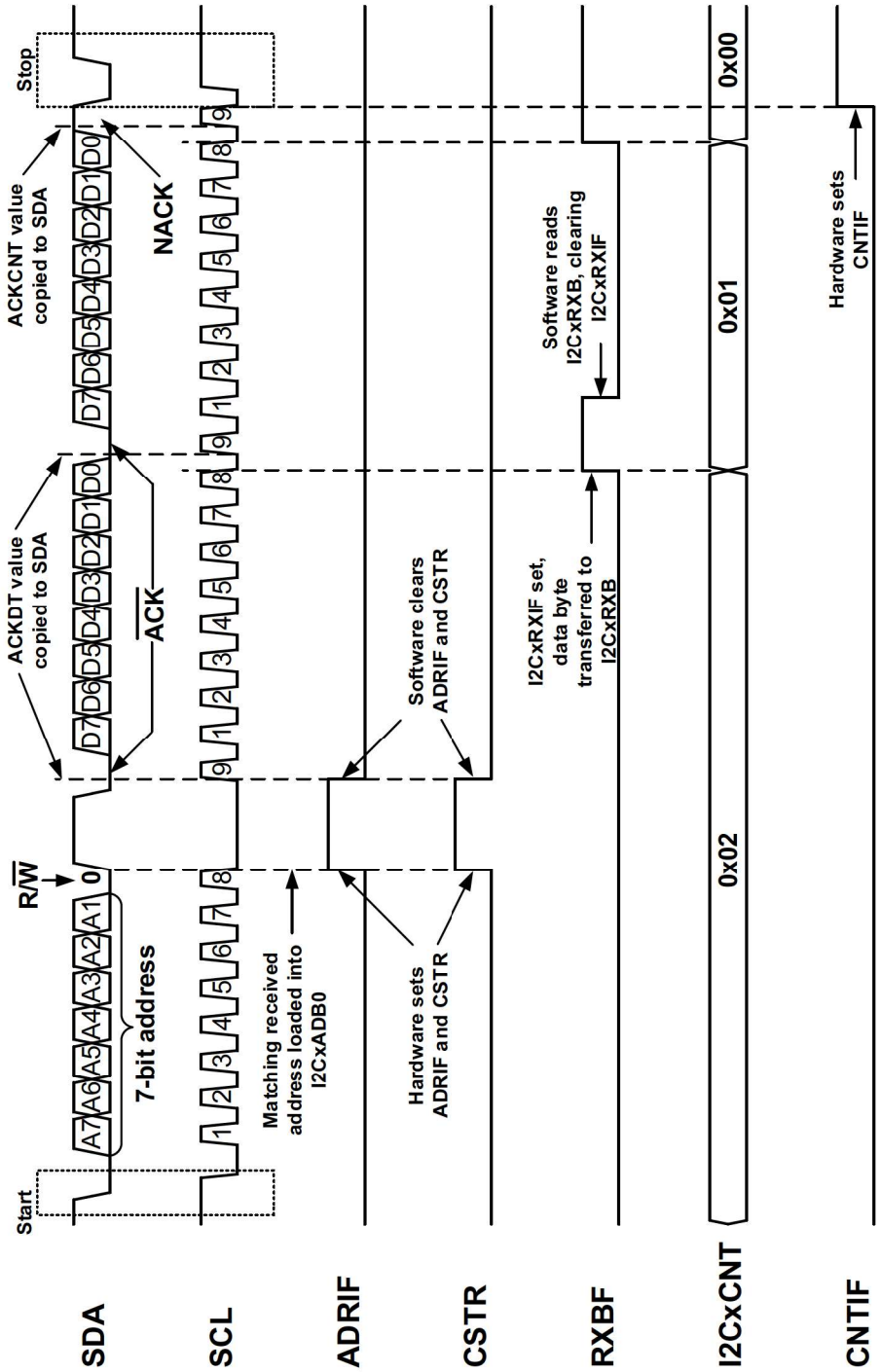

Figure 36-17. 7-Bit Slave Mode Reception (ADRIE = 1)

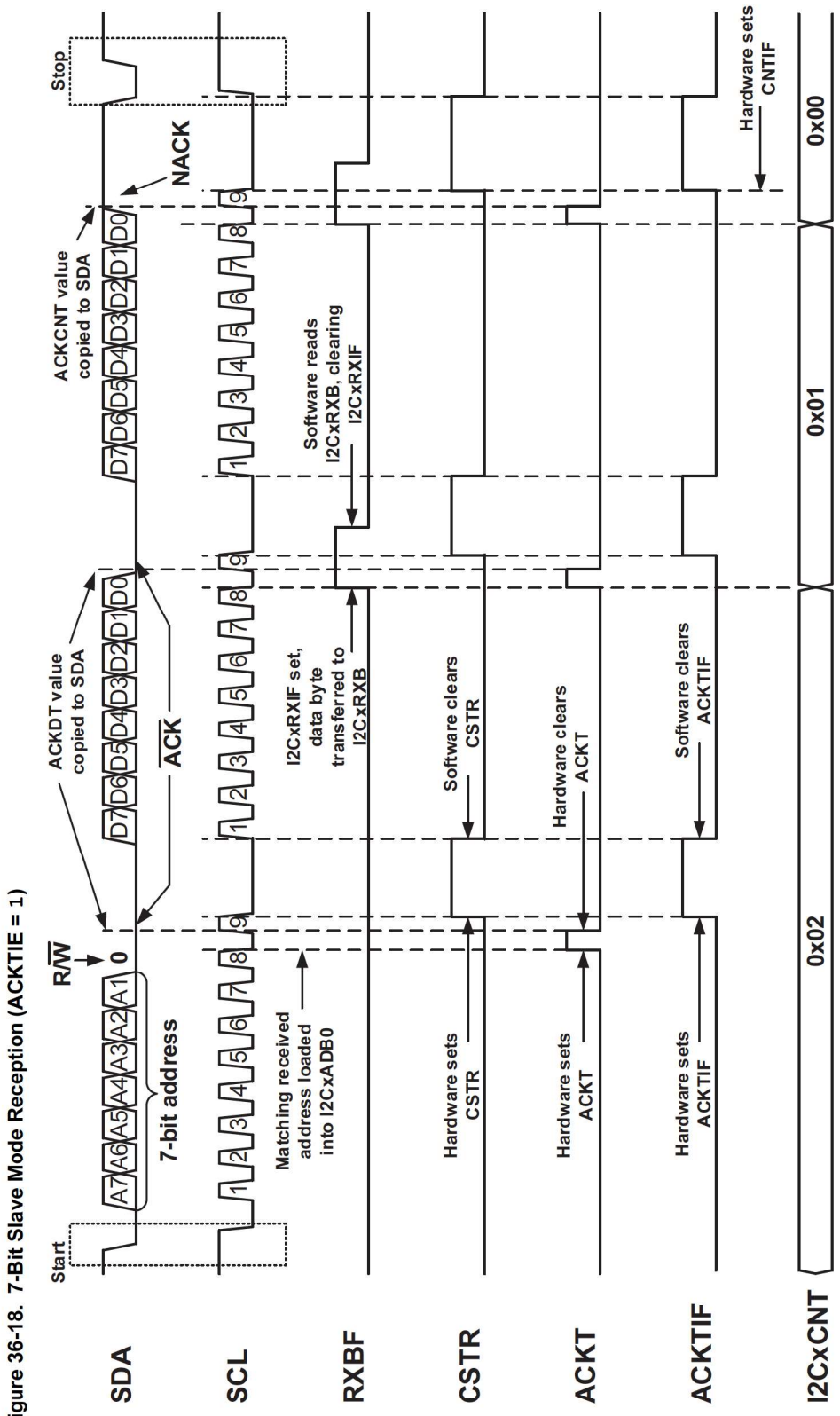

Figure 36-18. 7-Bit Slave Mode Reception (ACKTIE = 1)

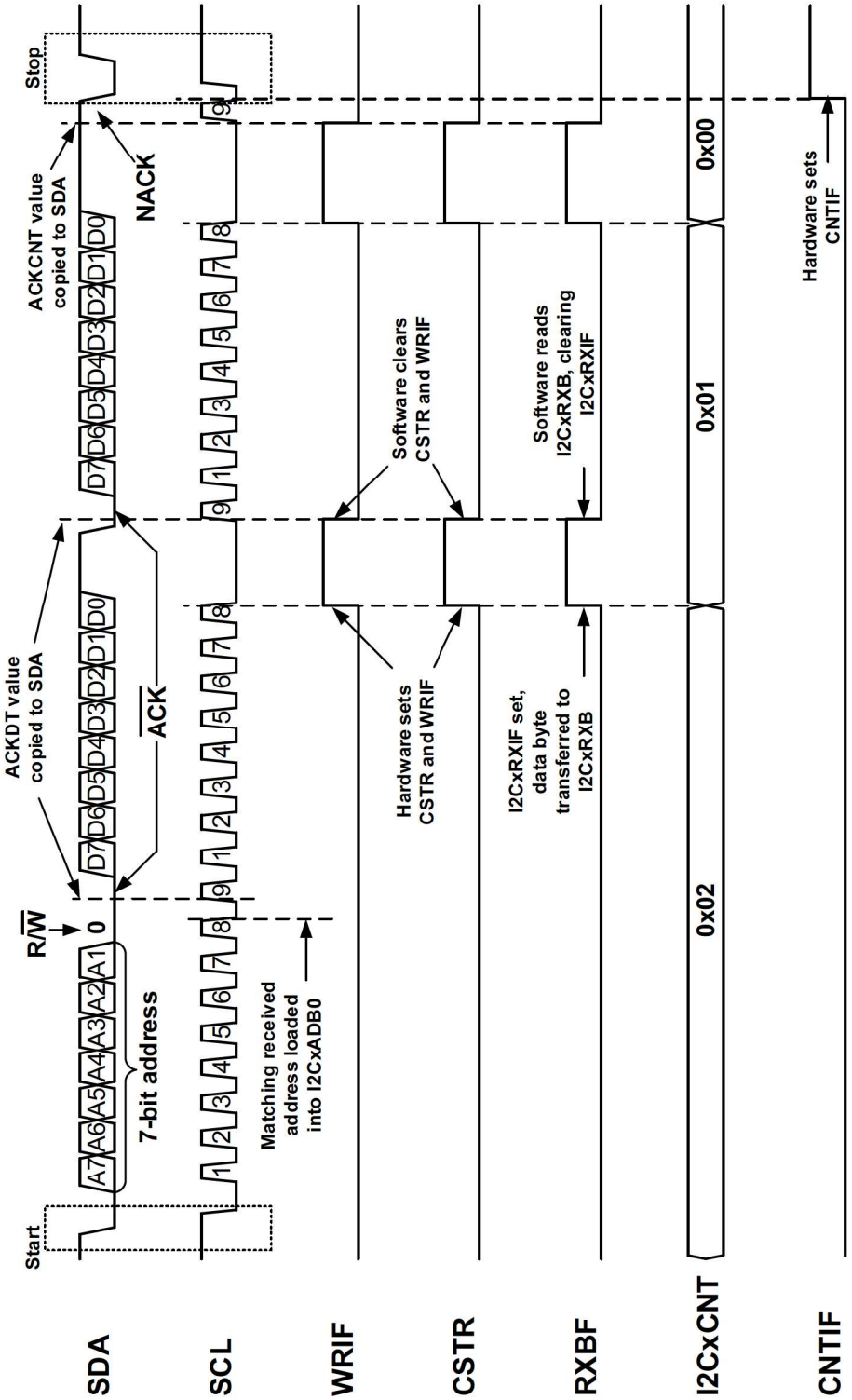

Figure 36-19. 7-Bit Slave Mode Reception (WRIE = 1)

36.4.1.4 Slave Operation in 10-Bit Addressing Modes

In 10-bit Addressing modes, the first two bytes following a Start condition form the 10-bit address (see figure below). The first byte (address high byte) holds the upper two address bits, the R/$\overline{W}$ bit, and a five digit code (11110) as defined by the I^2C Specification. The second byte (address low byte) holds the lower eight address bits. In all 10-bit Addressing modes, the R/$\overline{W}$ value contained in the first byte must always be zero (R/$\overline{W}$ = 0). If the master intends to read data from the slave, it must issue a Restart condition, followed by the address high byte with R/$\overline{W}$ set (R/$\overline{W}$ = 1).

The first byte is compared to the values in the I2CxADR1 and I2CxADR3 registers in 10-bit Addressing mode, or to the masked value of I2CxADR1 in 10-bit Addressing with Masking mode. The second byte is compared to the values in the I2CxADR0 and I2CxADR2 registers in 10-bit Addressing mode, or to the masked value of I2CxADR0 in 10-bit Addressing with Masking mode. If an address high byte match occurs, the high address byte is copied to I2CxADB1 and the R/$\overline{W}$ bit value is copied to the Read Information (R) bit, and if an address low byte match occurs, the low address byte is copied to I2CxADB0.

Figure 36-20. Upper and Lower 10-Bit Address Bytes

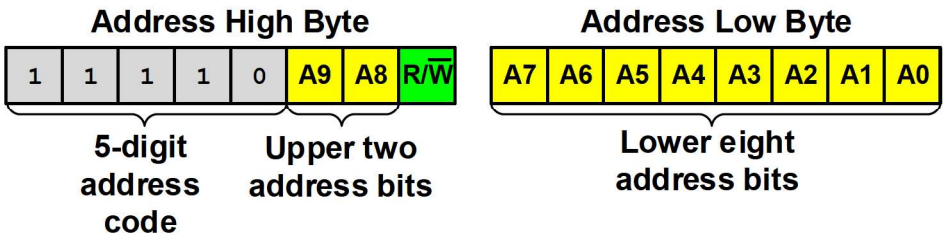

36.4.1.4.1 Slave Transmission (10-Bit Addressing Mode)

The following section describes the sequence of events that occur when the module is transmitting data in 10-bit Addressing mode:

1. The master device issues a Start condition. Once the Start condition has been detected, slave hardware sets the Start Condition Interrupt Flag (SCIF) bit. If the Start Condition Interrupt Enable (SCIE) bit is also set, the generic I2CxIF is also set.
2. Master hardware transmits the 10-bit high address byte with the R/$\overline{W}$ bit clear (R/$\overline{W}$ = 0).
3. Slave hardware compares the received address to the values in the I2CxADR registers. If the slave is configured in 10-bit Addressing mode (no masking), the received high address byte is compared to the values in I2CxADR1 and I2CxADR3. In 10-bit Addressing with Masking mode, the received high address byte is compared to the masked value of I2CxADR1.
   If an address match occurs:
   - The R/$\overline{W}$ value is copied to the Read Information (R) bit by module hardware.
   - The Data (D) bit is cleared by hardware.
   - The Address Interrupt Flag (ADRIF) bit is set (ADRIF = 1).
   - The matching address is loaded into either the I2CxADB1 register or into the I2CxRXB register as determined by the Address Buffer Disable (ABD) bit. When ABD is clear (ABD = 0), the matching address is copied to I2CxADB1. When ABD is set (ABD = 1), the matching address is copied to I2CxRXB, which also sets the Receive Buffer Full Status (RXBF) bit and the I2C Receive Interrupt Flag (I2CxRXIF) bit.

Important: Regardless of whether the Address Interrupt and Hold Enable (ADRIE) bit is set, clock stretching does not occur when the R/$\overline{W}$ bit is clear in 10-bit Addressing modes.

If no address match occurs, the module remains idle.

4. The master device transmits the 9th clock pulse, and slave hardware transfers the value of the ACKDT bit onto the SDA line. If there are pending errors, such as a receive buffer overflow (RXO = 1), slave hardware generates a NACK and the module goes idle.
5. The master device transmits the low address byte. If the slave is configured in 10-bit Addressing mode (no masking), the received low address byte is compared to the values in I2CxADR0 and I2CxADR2. In 10-bit Addressing with Masking mode, the received low address byte is compared to the masked value of I2CxADR0.
   If a match occurs:
   - The Slave Mode Active (SMA) bit is set by module hardware.
   - ADRIF is set. If ADRIE is set, and the Clock Stretching Disable (CSD) bit is clear, hardware sets the Slave Clock Stretching (CSTR) bit and the generic I2CxIF bit. This allows time for the slave to read either I2CxADB0 or I2CxRXB and selectively $\overline{ACK}$/NACK based on the received address. When the slave has finished processing the address, software must clear CSTR to resume operation.
   - The matching received address is loaded into either the I2CxADB0 register or into the I2CxRXB register as determined by the ABD bit. When ABD is clear (ABD = 0), the matching address is copied to I2CxADB0. When ABD is set (ABD = 1), the matching address is copied to I2CxRXB, which also sets RXBF and I2CxRXIF. I2CxRXIF is a read-only bit, and must be cleared by either reading I2CxRXB or by setting the Clear Buffer (CLRBF) bit (CLRBF = 1).

   If no match occurs, the module goes idle.
6. The master device transmits the 9th clock pulse, and slave hardware transfers the value of the ACKDT bit onto the SDA line. If there are pending errors, such as a receive buffer overflow (RXO = 1), slave hardware generates a NACK and the module goes idle.
7. After the 9th falling edge of SCL, the Acknowledge Status Time Interrupt Flag (ACKTIF) bit is set. If the Acknowledge Time Interrupt and Hold Enable (ACKTIE) bit is also set, the generic I2CxIF is set, and if slave hardware generated an $\overline{ACK}$, the CSTR bit is also set and the clock is stretched (when CSD = 0). If a NACK was generated, the CSTR bit remains unchanged. Once completed, software must clear CSTR and ACKTIF to release the clock and resume operation.
8. Master hardware issues a Restart condition (cannot be a Start condition), and once the slave detects the Restart, hardware sets the Restart Condition Interrupt Flag (RSCIF). If the Restart Condition Interrupt Enable (RSCIE) bit is also set, the generic I2CxIF is also set.
9. Master hardware transmits the slave's high address byte with R/$\overline{W}$ set.
   If the received high address byte matches:
   - The R/$\overline{W}$ bit value is copied to the R bit.
   - The SMA bit is set.
   - The D bit is cleared, indicating the last byte as an address.
   - ADRIF is set. If ADRIE is set, and the CSD bit is clear, hardware sets CSTR and the generic I2CxIF bit. This allows time for the slave to read either I2CxADB1 or I2CxRXB and selectively $\overline{ACK}$/NACK based on the received address. When the slave has finished processing the address, software must clear CSTR to resume operation.
   - The matching received address is loaded into either the I2CxADB1 register or into the I2CxRXB register as determined by the ABD bit. When ABD is clear (ABD = 0), the matching address is copied to I2CxADB1. When ABD is set (ABD = 1), the matching address is copied to I2CxRXB, which also sets RXBF and I2CxRXIF. I2CxRXIF is a read-only bit, and must be cleared by either reading I2CxRXB or by setting CLRBF (CLRBF = 1).

   If the address does not match, the module goes idle.
10. If the Transmit Buffer Empty Status (TXBE) bit is set (TXBE = 1), I2CxCNT has a non-zero value (I2CxCNT != 0), and the I2C Transmit Interrupt Flag (I2CxTXIF) is set (I2CxTXIF = 1), slave hardware sets CSTR, stretches the clock (when CSD = 0), and waits for software to load I2CxTXB with data. I2CxTXB must be loaded to clear I2CxTXIF. Once data is loaded into I2CxTXB, hardware automatically clears CSTR to resume communication.
11. The master device transmits the 9th clock pulse, and slave hardware transfers the value of the ACKDT bit onto the SDA line. If there are pending errors, such as a receive overflow (RXO = 1), slave hardware automatically generates a NACK condition. NACKIF is set, and the module goes idle.

12. Upon the 9th falling SCL edge, the data byte in I2CxTXB is transferred to the transmit shift register, and I2CxCNT is decremented by one. Additionally, the ACKTIF bit is set. If the ACKTIE bit is also set, the generic I2CxIF is set, and if slave hardware generated an $\overline{\text{ACK}}$, the CSTR bit is also set and the clock is stretched (when CSD = 0). If a NACK was generated, the CSTR bit remains unchanged. Once complete, software must clear CSTR and ACKTIF to release the clock and continue operation.
13. If the slave generated an $\overline{\text{ACK}}$ and I2CxCNT is non-zero, master hardware transmits eight clock pulses, and slave hardware begins to shift the data byte out of the shift register starting with the Most Significant bit (MSb).
14. After the 8th falling edge of SCL, slave hardware checks the status of TXBE and I2CxCNT. If TXBE is set and I2CxCNT has a non-zero count value, hardware sets CSTR and the clock is stretched (when CSD = 0) until software loads I2CxTXB with new data. Once I2CxTXB has been loaded, hardware clears CSTR to resume communication.
15. Once the master hardware clocks in all eight data bits, it transmits the 9th clock pulse along with the $\overline{\text{ACK}}$/NACK response back to the slave. Slave hardware copies the $\overline{\text{ACK}}$/NACK value to the Acknowledge Status (ACKSTAT) bit and sets ACKTIF. If ACKTIE is also set, slave hardware sets the generic I2CxIF bit and CSTR, and stretches the clock (when CSD = 0). Software must clear CSTR to resume operation.
16. After the 9th falling edge of SCL, data currently loaded in I2CxTXB is transferred to the transmit shift register, setting both TXBE and I2CxTXIF. I2CxCNT is decremented by one. If I2CxCNT is zero (I2CxCNT = 0), CNTIF is set.
17. If I2CxCNT is non-zero and the master issued an $\overline{\text{ACK}}$ on the last byte (ACKSTAT = 0), the master transmits eight clock pulses, and slave hardware begins to shift data out of the shift register.
18. Repeat Steps 13-17 until the master has received all the requested data (I2CxCNT = 0). Once all data is received, master hardware transmits a NACK condition, followed by either a Stop or Restart condition. Once the NACK has been received by the slave, hardware sets NACKIF and clears SMA. If the NACK Detect Interrupt Enable (NACKIE) bit is also set, the generic I2C Error Interrupt Flag (I2CxEIF) is set. If the master issued a Stop condition, slave hardware sets the Stop Condition Interrupt Flag (PCIF). If the master issued a Restart condition, slave hardware sets the Restart Condition Interrupt Flag (RSCIF) bit. If the associated interrupt enable bits are also set, the generic I2CxIF is also set.

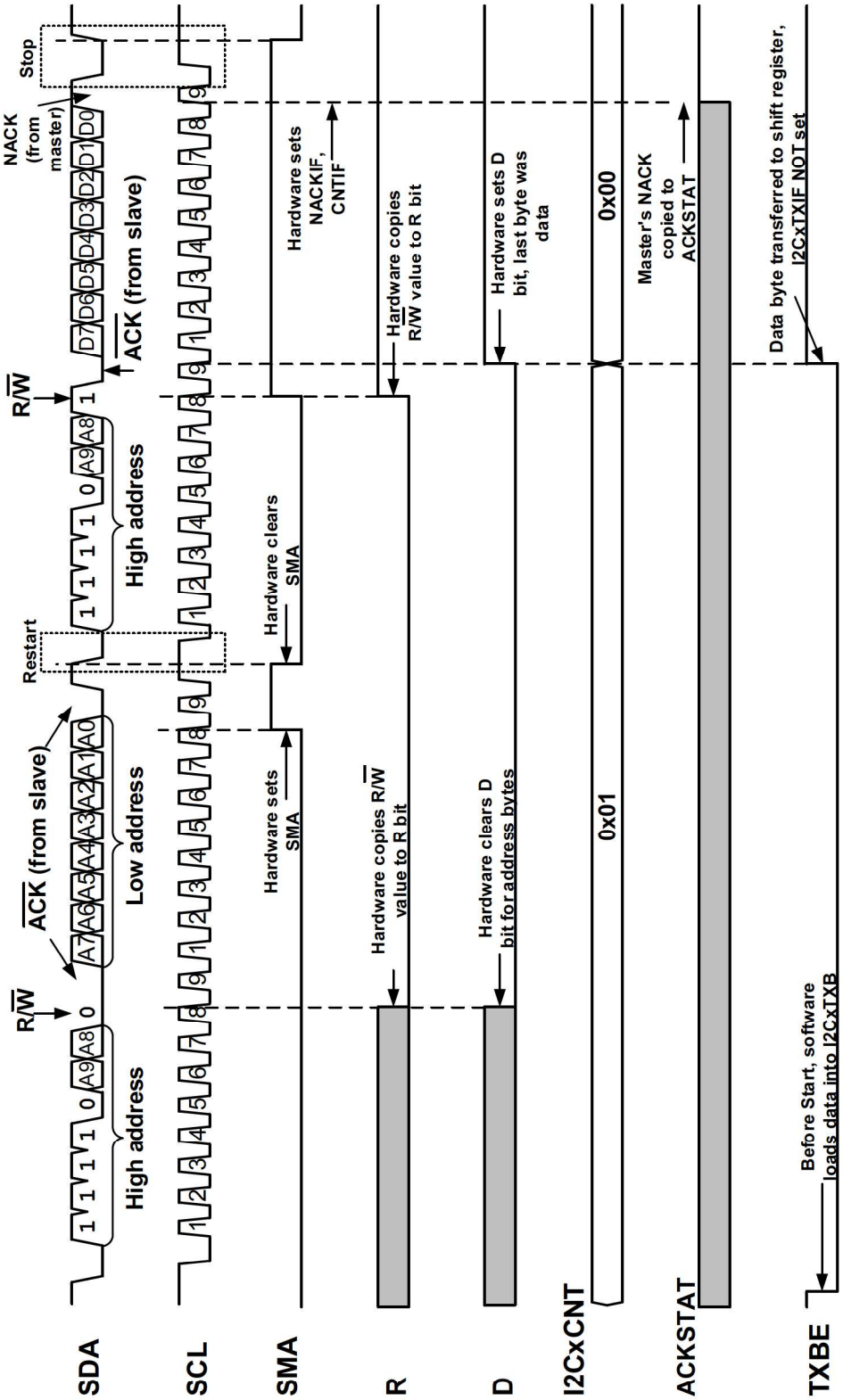

Figure 36-21. 10-Bit Slave Mode Transmission

36.4.1.4.2 Slave Reception (10-Bit Addressing Mode)

The following section describes the sequence of events that occur when the module is receiving data in 7-bit Addressing mode:

1. The master issues a Start condition. Once the Start is detected, slave hardware sets the Start Condition Interrupt Flag (SCIF) bit. If the Start Condition Interrupt Enable (SCIE) bit is also set, the generic I2CxIF bit is also set.
2. Master hardware transmits the address high byte with the R/$\overline{W}$ bit clear (R/$\overline{W}$ = 0).
3. The received high address byte is compared to the values in the I2CxADR registers. If the slave is configured in 10-bit Addressing mode (no masking), the received high address byte is compared to the values in the I2CxADR1 and I2CxADR3 registers. If the slave is configured in 10-bit Addressing with Masking mode, the received high address byte is compared to the masked value in the I2CxADR1 register.
   If a high address match occurs:
   - The R/$\overline{W}$ bit value is copied to the Read Information (R) bit by module hardware.
   - The Data (D) bit is cleared (D = 0) by hardware, indicating the last received byte was an address.
   - The Address Interrupt Flag (ADRIF) bit is set (ADRIF = 1). It is important to note that regardless of whether the Address Interrupt and Hold Enable (ADRIE) bit is set, clock stretching does not occur when the R/$\overline{W}$ bit is clear in 10-bit Addressing modes.
   - The matching address is loaded into either the I2CxADB1 register or into the I2CxRXB register as determined by the Address Buffer Disable (ABD) bit. When ABD is clear (ABD = 0), the matching address is copied to I2CxADB1. When ABD is set (ABD = 1), the matching address is copied to I2CxRXB, which also sets the Receive Buffer Full Status (RXBF) bit and the I2C Receive Interrupt Flag (I2CxRXIF) bit.

   If no address match occurs, the module remains idle.
4. The master device transmits the 9th clock pulse, and slave hardware transfers the value of the ACKDT bit onto the SDA line. If there are pending errors, such as a receive buffer overflow (RXO = 1), slave hardware generates a NACK and the module goes idle.
5. The master device transmits the low address byte. If the slave is configured in 10-bit Addressing mode (no masking), the received low address byte is compared to the values in I2CxADR0 and I2CxADR2. In 10-bit Addressing with Masking mode, the received low address byte is compared to the masked value of I2CxADR0.
   If a match occurs:
   - The Slave Mode Active (SMA) bit is set by module hardware.
   - ADRIF is set. If ADRIE is set, and the Clock Stretching Disable (CSD) bit is clear, hardware sets the Slave Clock Stretching (CSTR) bit and the generic I2CxIF bit. This allows time for the slave to read either I2CxADB0 or I2CxRXB and selectively $\overline{ACK}$/NACK based on the received address. When the slave has finished processing the address, software must clear CSTR to resume operation.
   - The matching received address is loaded into either the I2CxADB0 register or into the I2CxRXB register as determined by the ABD bit. When ABD is clear (ABD = 0), the matching address is copied to I2CxADB0. When ABD is set (ABD = 1), the matching address is copied to I2CxRXB, which also sets the RXBF and the I2CxRXIF bits. I2CxRXIF is a read-only bit, and must be cleared by either reading I2CxRXB or by setting the Clear Buffer (CLRBF) bit (CLRBF = 1).

   If no match occurs, the module goes idle.
6. The master device transmits the 9th clock pulse, and slave hardware transfers the value of the ACKDT bit onto the SDA line. If there are pending errors, such as a receive buffer overflow (RXO = 1), slave hardware generates a NACK and the module goes idle.
7. After the 9th falling edge of SCL, the Acknowledge Status Time Interrupt Flag (ACKTIF) bit is set. If the Acknowledge Time Interrupt and Hold Enable (ACKTIE) bit is also set, the generic I2CxIF is set, and if slave hardware generated an $\overline{ACK}$, the CSTR bit is also set and the clock is stretched (when CSD = 0). If a NACK was generated, the CSTR bit remains unchanged. Once completed, software must clear CSTR and ACKTIF to release the clock and resume operation.
8. If slave hardware generated a NACK, master hardware generates a Stop condition, the Stop Condition Interrupt Flag (PCIF) is set when slave hardware detects the Stop condition, and the slave goes idle. If an $\overline{ACK}$ was generated, master hardware transmits the first seven bits of the 8-bit data byte.

9. If data remains in I2CxRXB (RXBF = 1 and I2CxRXIF = 1) when the first seven bits of the new byte are received by the shift register, CSTR is set, and if CSD is clear, the clock is stretched after the 7th falling edge of SCL. This allows time for the slave to read I2CxRXB, which clears RXBF and I2CxRXIF, and prevents a receive buffer overflow. Once I2CxRXB has been read, RXBF and I2CxRXIF are cleared, and hardware releases SCL.
10. Master hardware transmits the 8th bit of the current data byte into the slave receive shift register. Slave hardware then transfers the complete byte into I2CxRXB on the 8th falling edge of SCL, and sets the following bits:
    - I2CxRXIF
    - I2CxIF
    - Data Write Interrupt Flag (WRIF)
    - Data (D)
    - RXBF

    I2CxCNT is decremented by one. If the Data Write Interrupt and Hold Enable (WRIE) bit is set (WRIE = 1), hardware sets CSTR (when CSD = 0) and stretches the clock, allowing time for slave software to read I2CxRXB and determine the state of the ACKDT bit that is transmitted back to the master. Once the slave determines the Acknowledgement response, software clears CSTR to allow further communication.
11. Upon the 9th falling edge of SCL, the ACKTIF bit is set. If ACKTIE is also set, the generic I2CxIF is set, and if CSD is clear, slave hardware sets CSTR and stretches the clock. This allows time for software to read I2CxRXB. Once complete, software must clear both CSTR and ACKTIF to release the clock and continue communication.
12. Repeat Steps 8 – 11 until the master has transmitted all the data (I2CxCNT = 0), or until the master issues a Stop or Restart condition.

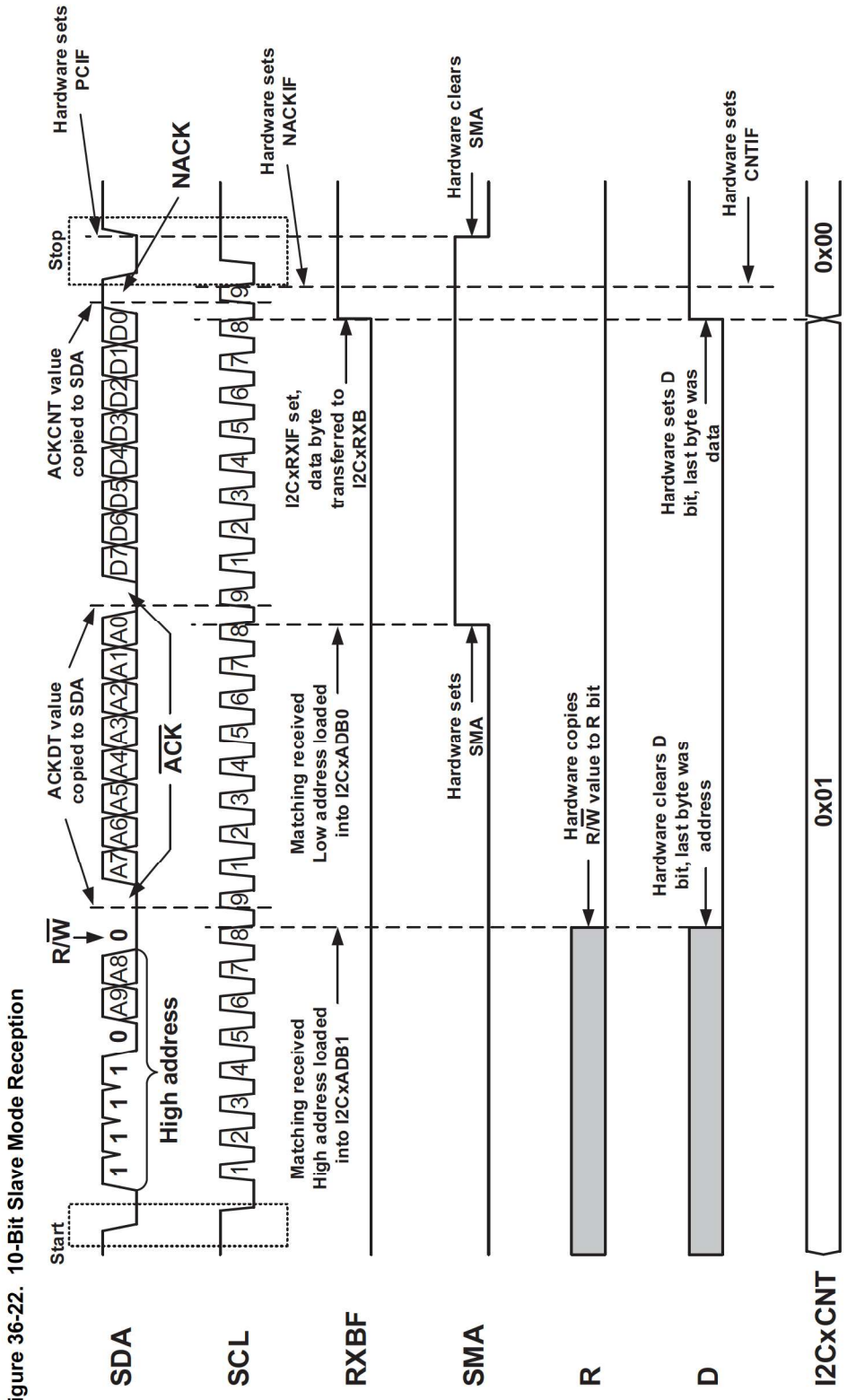

Figure 36-22. 10-Bit Slave Mode Reception

36.4.2 I²C Master Mode Operation

The I²C module provides two master operation modes as selected by the I2C Mode Select (MODE) bits:

- I²C Master mode with 7-bit addressing
- I²C Master mode with 10-bit addressing

To begin any I²C communication, master hardware checks to ensure that the bus is in an Idle state, which means both the SCL and SDA lines are floating in a high logic state as indicated by the Bus Free Status (BFRE) bit.

Once Master hardware has determined that the bus is free (BFRE = 1), it examines the state of the Address Buffer Disable (ABD) bit. The ABD bit determines whether the I2CxADB registers are used.

When ABD is clear (ABD = 0), address buffers I2CxADB0 and I2CxADB1 are active. In 7-bit Addressing mode, software loads I2CxADB1 with the 7-bit slave address and R/$\overline{W}$ bit setting, and also loads I2CxTXB with the first byte of data . In 10-bit Addressing mode, software loads I2CxADB1 with the address high byte and I2CxADB0 with the address low byte, and also loads I2CxTXB with the first data byte. Software must issue a Start condition to initiate communication with the slave.

When ABD is set (ABD = 1), the address buffers are inactive. In this case, communication begins as soon as software loads the slave address into I2CxTXB. Writes to the Start bit (S) are ignored.

In 7-bit Addressing mode, the Least Significant bit (LSb) of the 7-bit address byte acts as the Read/not Write (R/$\overline{W}$) information bit, while in 10-bit Addressing mode, the LSb of the address high byte is reserved as the R/$\overline{W}$ bit. When R/$\overline{W}$ is set, the master intends to read data from the slave (see figure below). When R/$\overline{W}$ is clear, the master intends to write data to the slave (see figure below). The master may also wish to read or write data to a specific location, such as writing to a specific EEPROM location. In this case, the master issues a Start condition, followed by the slave's address with the R/$\overline{W}$ bit clear. Once the slave acknowledges the address, the first data byte following the 7-bit or 10-bit address is used as the slave's specific register location. If the master intends to read data from the specific location, it must issue a Restart condition, followed by the slave address with the R/$\overline{W}$ bit set (see figure below). If the addressed slave device exists on the bus, it must respond with an Acknowledge ($\overline{ACK}$) sequence.

Once a slave has acknowledged its address, the master begins to receive data from the slave or transmits data to the slave. Data is always transmitted Most Significant bit (MSb) first. When the master wishes to halt further communication, it transmits either a Stop condition, signaling to the slave that communication is to be terminated, or a Restart condition, informing the bus that the current master wishes to hold the bus to communicate with the same or other slave devices.

Figure 36-23. 7-Bit Master Read Diagram

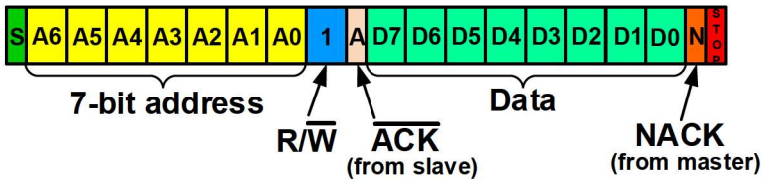

Figure 36-24. 7-Bit Master Read Diagram (from a specific memory/register location)

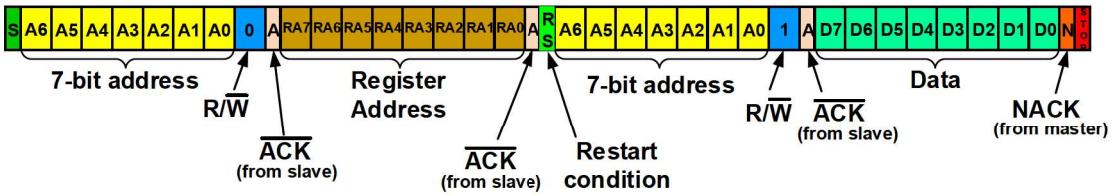

Figure 36-25. 10-Bit Master Read Diagram

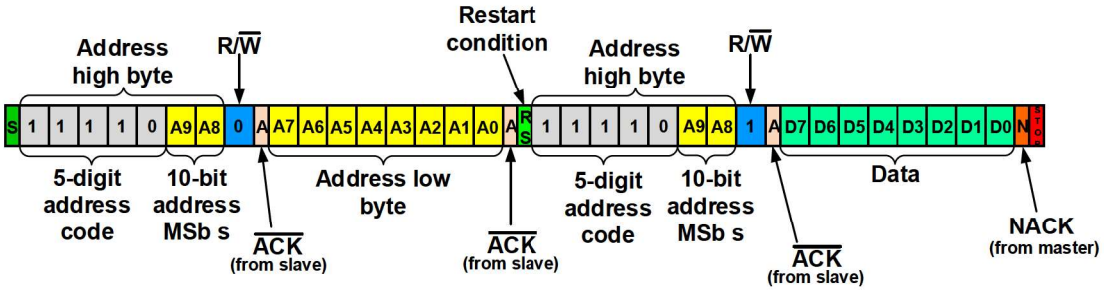

Figure 36-26. 7-Bit Master Write Diagram

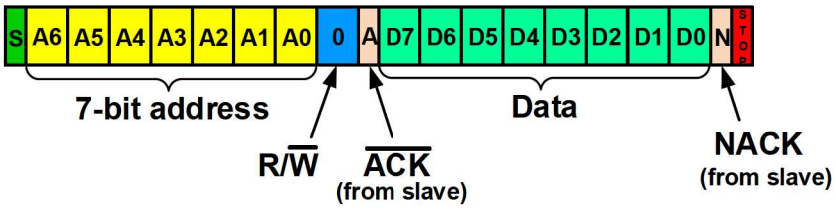

Figure 36-27. 7-Bit Master Write Diagram (to a specific memory/register location)

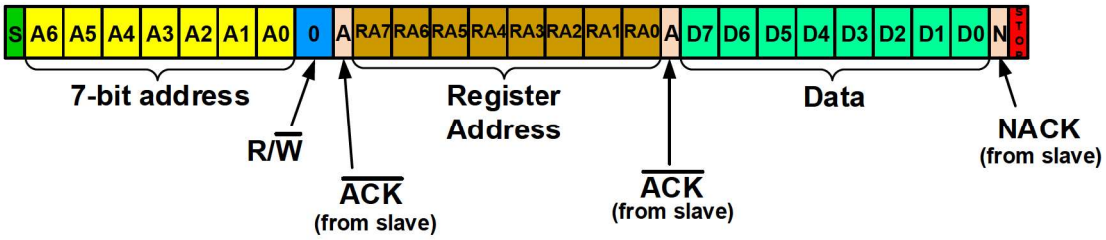

Figure 36-28. 10-Bit Master Write Diagram

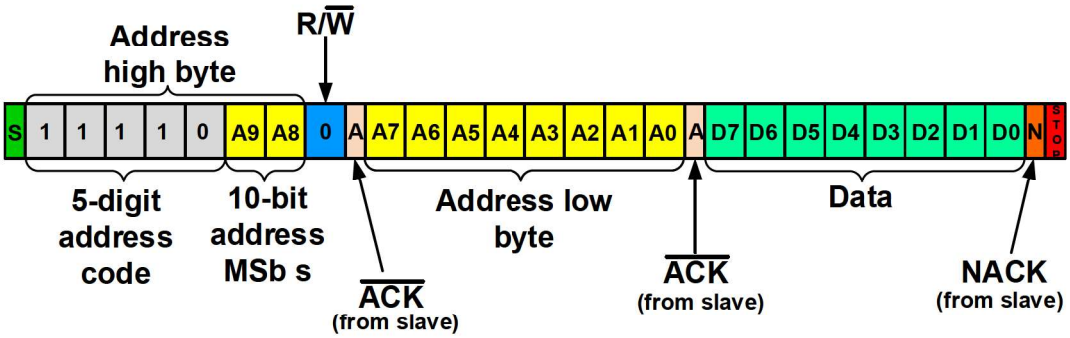

36.4.2.1 Bus Free Time

The Bus Free Status (BFRE) bit indicates the activity status of the bus. When BFRE is set (BFRE = 1), the bus is in an Idle state (both SDA and SCL are floating high), and any master device residing on the bus can compete for control of the bus. When BFRE is clear (BFRE = 0), the bus is in an Active state, and any attempts by a master to control the bus will cause a collision.

The Bus Free Time (BFRET) bits determine the length of time, in terms of I^2C clock pulses, before the bus is considered idle. Once module hardware detects logic high levels on both SDA and SCL, it monitors the I^2C clock signal, and when the desired number of pulses have occurred, module hardware sets BFRE. The BFRET bits are also used to ensure that the module meets the minimum Stop hold time as defined by the I^2C Specification.

36.4.2.2 Master Clock Timing

The Serial Clock (SCL) signal is generated by module hardware via the I2C Clock Selection Register (I2CxCLK), the I2C Baud Rate Prescaler Register (I2CxBAUD), and the Fast Mode Enable (FME) bit.

The figure below illustrates the SCL clock generation.

Figure 36-29. SCL Clock Generation

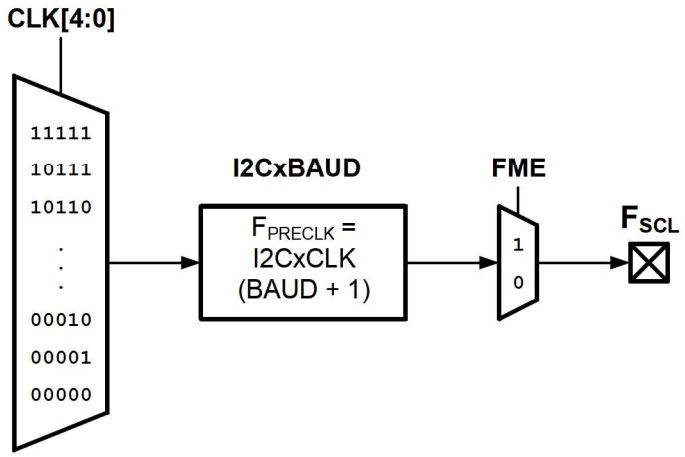

I2CxCLK contains several clock source selections. The clock source selections typically include variants of the system clock and timer resources.

Important: When using a timer as the clock source, the timer must also be configured. Additionally, when using the HFINTOSC as a clock source it is important to understand that the HFINTOSC frequency selected by the OSCFRQ register is used as the clock source. The clock divider selected by the NDIV bits is not used. For example, if OSCFRQ selects 4 MHz as the HFINTOSC clock frequency, and the NDIV bits select a divide by four scaling factor, the I2C Clock Frequency will be 4 MHz and not 1 MHz since the divider is ignored.

I2CxBAUD is used to determine the prescaler (clock divider) for the I2CxCLK source.

The FME bit acts as a secondary divider to the prescaled clock source.

When FME is clear (FME = 0), one SCL period (T_{SCL}) is equal to five clock periods of the prescaled I2CxCLK source. In other words, the prescaled I2CxCLK source is divided by five. For example, if the HFINTOSC (set to 4 MHz) clock source is selected, I2CxBAUD is loaded with a value of '7', and the FME bit is clear, the actual SCL frequency is 100 kHz (see Equation below).

Equation 36-1. SCL Frequency (FME = 0)

Example:

- I2CxCLK: HFINTOSC (4 MHz)
- I2CxBAUD: 7
- FME: FME = 0

$$f_{SCL} = \frac{\frac{f_{I2CxCLK}}{(BAUD + 1)}}{FME} = \frac{\frac{4MHz}{8}}{5} = 100kHz$$

When FME is clear, master hardware uses the first prescaled I2CxCLK source period to drive SCL low (see figure below). During the second period, hardware verifies that SCL is in fact low. During the third period, hardware releases SCL, allowing it to float high. Master hardware then uses the fourth and fifth periods to sample SCL to verify that SCL is high. If a slave is holding SCL low (clock stretch) during the fourth and/or fifth period, master hardware samples each successive prescaled I2CxCLK period until a high level is detected on SCL. Once the high level is detected, master hardware samples SCL during the next two I2CxCLK periods to verify that SCL is high.

Figure 36-30. SCL Timing (FME = 0)

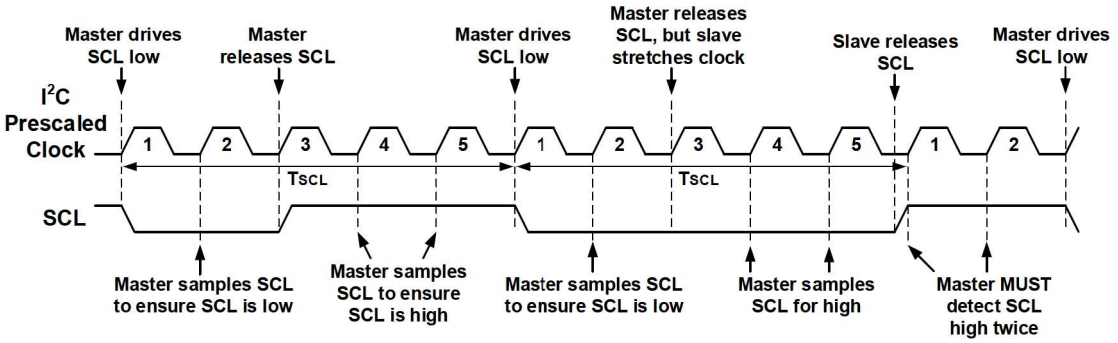

When FME is set (FME = 1), one SCL period (T_{SCL}) is equal to four clock periods of the prescaled I2CxCLK source. In other words, the prescaled I2CxCLK source is divided by four. Using the example from above, if the HFINTOSC (4 MHz) clock source is selected, I2CxBAUD is loaded with a value of '7'and the FME bit is set, the actual SCL frequency is 125 kHz (see Equation below).

Equation 36-2. SCL Frequency (FME = 1)

Example:

- I2CxCLK: HFINTOSC (4 MHz)
- I2CxBAUD: 7
- FME: FME = 1

$$f_{SCL} = \frac{\frac{f_{I2CxCLK}}{(BAUD + 1)}}{FME} = \frac{\frac{4MHz}{8}}{4} = 125kHz$$

When FME is set, master hardware uses the first prescaled I2CxCLK source period to drive SCL low (see figure below). During the second prescaled period, hardware verifies that SCL is in fact low. During the third period, hardware releases SCL, allowing it to float high. Master hardware then uses the fourth period to sample SCL to verify that SCL is high. If a slave is holding SCL low (clock stretch) during the fourth period, master hardware samples each successive prescaled I2CxCLK period until a high level is detected on SCL. Once the high level is detected, master hardware samples SCL during the next period to verify that SCL is high.

Figure 36-31. SCL Timing (FME = 1)

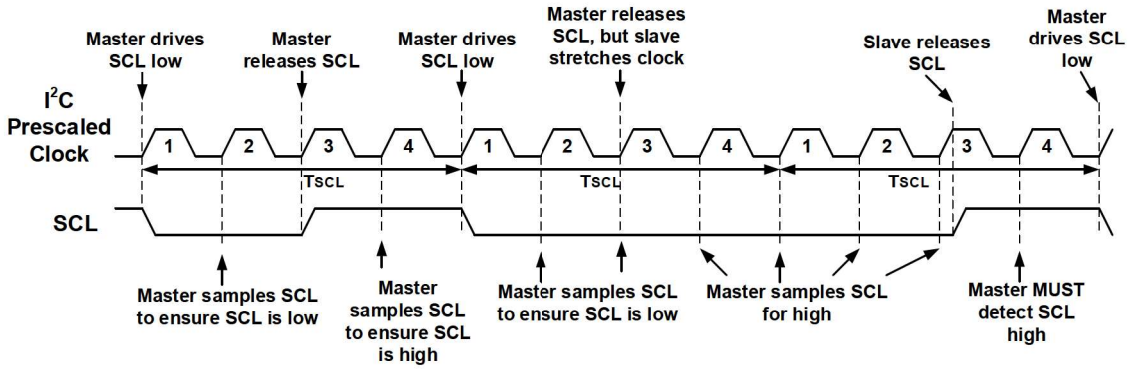

36.4.2.3 Start Condition Timing

A Start condition is initiated by either writing to the Start (S) bit (when ABD = 0), or by writing to I2CxTXB (when ABD = 1). When the Start condition is initiated, master hardware verifies that the bus is idle, then begins to count the number of I2CxCLK periods as determined by the Bus Free Time Status (BFRET) bits. Once the Bus Free Time period has been reached, hardware sets BFRE (BFRE = 1), the Start condition is asserted on the bus, which pulls the SDA line low, and the Start Condition Interrupt Flag (SCIF) bit is set (SCIF = 1). Master hardware then waits one full SCL period (T_{SCL}) before pulling the SCL line low, signaling the end of the Start condition. At this point, hardware loads the transmit shift register from either I2CxADB0/I2CxADB1 (ABD = 0) or I2CxTXB (ABD = 1).

The figure below shows an example of a Start condition.

Figure 36-32. Start Condition Timing

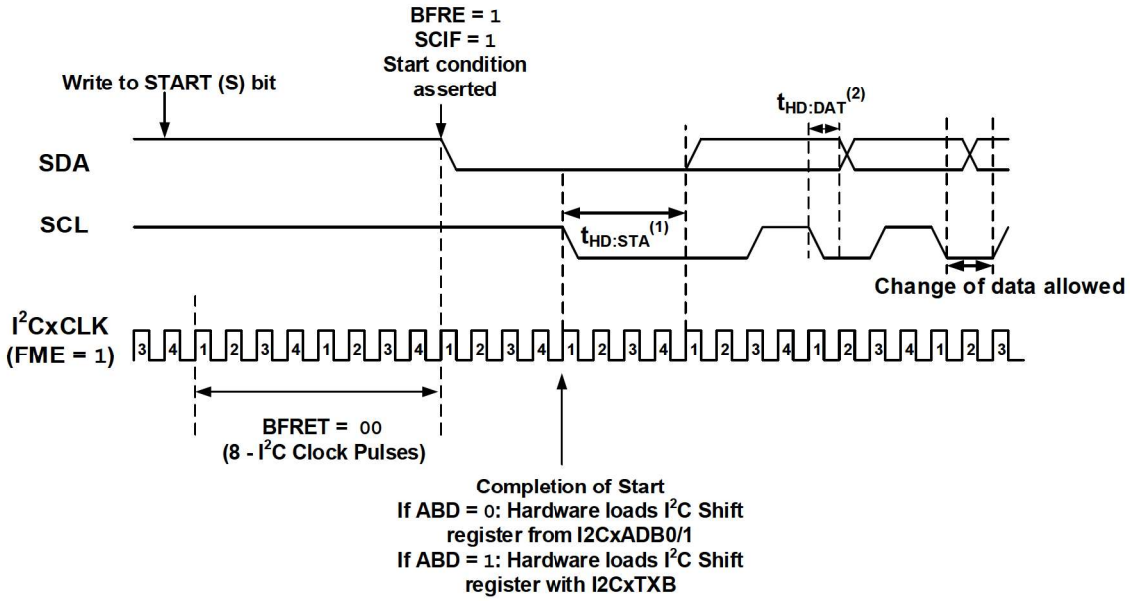

Important:

1. See device data sheet for Start condition hold time parameters.
2. SDA hold times are configured via the SDAHT bits.

36.4.2.4 Acknowledge Sequence Timing

As previously mentioned, the 9th SCL pulse for any transferred address/data byte is reserved for the Acknowledge ($\overline{ACK}$) sequence. During an Acknowledge sequence, the transmitting device relinquishes control of the SDA line to the receiving device. At this time, the receiving device must decide whether to pull the SDA line low ($\overline{ACK}$) or allow the line to float high (NACK).

An Acknowledge sequence is enabled automatically by module hardware following an address/data byte reception. On the 8th falling edge of SCL, the value of either the ACKDT or ACKCNT bits are copied to the SDA output, depending on the state of I2CxCNT. When I2CxCNT holds a non-zero value (I2CxCNT != 0), the value of ACKDT is copied to SDA (see figure below). When I2CxCNT reaches a zero count (I2CxCNT = 0), the value of ACKCNT is copied to SDA (see figure below). In most applications, the value of ACKDT should be zero (ACKDT = 0), which represents an $\overline{ACK}$, while the value of ACKCNT should be one (ACKCNT = 1), which represents a NACK.

Figure 36-33. Acknowledge ($\overline{ACK}$) Sequence Timing

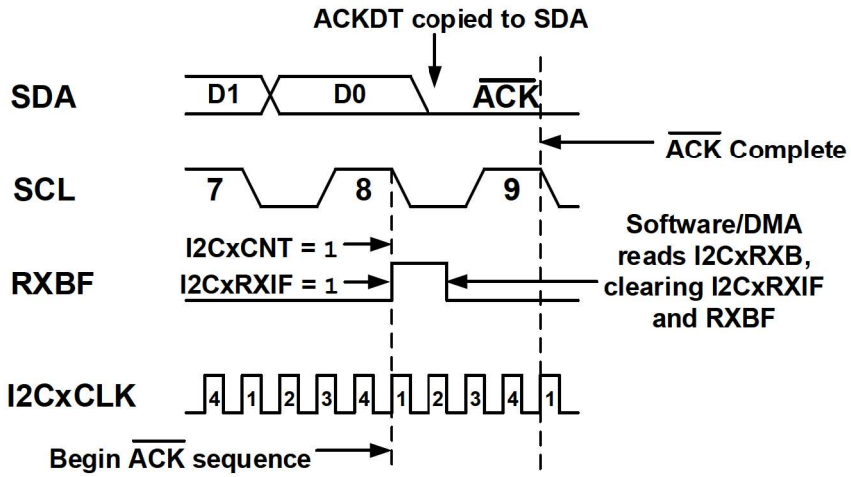

Figure 36-34. Not Acknowledge (NACK) Sequence Timing

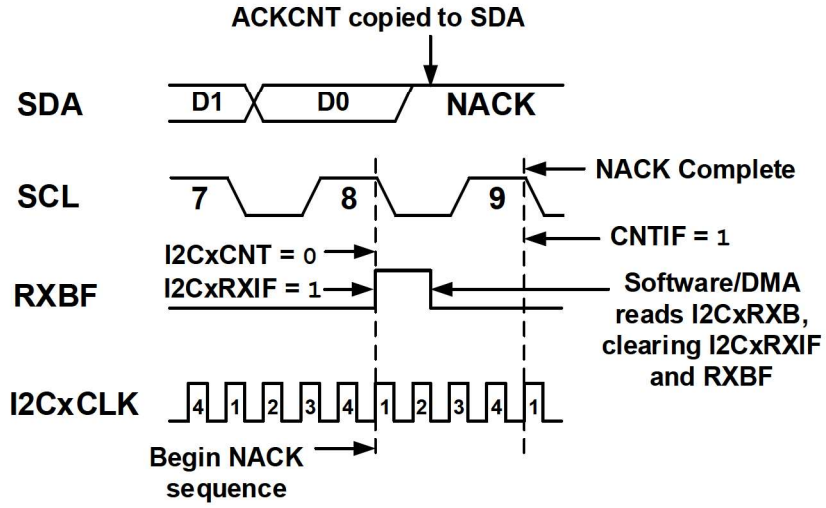

36.4.2.5 Restart Condition Timing

A Restart condition is identical to a Start condition. A master device may issue a Restart instead of a Stop condition if it intends to hold the bus after completing the current data transfer. A Restart condition occurs when the Restart Enable (RSEN) bit is set (RSEN = 1), either I2CxCNT is zero (I2CxCNT = 0) or ACKSTAT is set (ACKSTAT = 1), and either master hardware (ABD = 1) or user software (ABD = 0) sets the Start (S) bit.

When the Start bit is set, master hardware releases SDA (SDA floats high) for half of an SCL clock period ($T_{SCL}/2$), and then releases SCL for another half of an SCL period, then samples SDA (see figure below). If SDA is sampled low while SCL is sampled high, a bus collision has occurred. In this case, the Bus Collision Detect Interrupt Flag (BCLIF) is set, and if the Bus Collision Detect Interrupt Enable (BCLIE) bit is also set, the generic I2CxEIF is set, and the module goes idle. If SDA is sampled high while SCL is also sampled high, master hardware issues a Start

condition. Once the Restart condition is detected on the bus, the Restart Condition Interrupt Flag (RSCIF) is set by hardware, and if the Restart Condition Interrupt Enable (RSCIE) bit is set, the generic I2CxIF is also set.

Figure 36-35. Restart Condition Timing

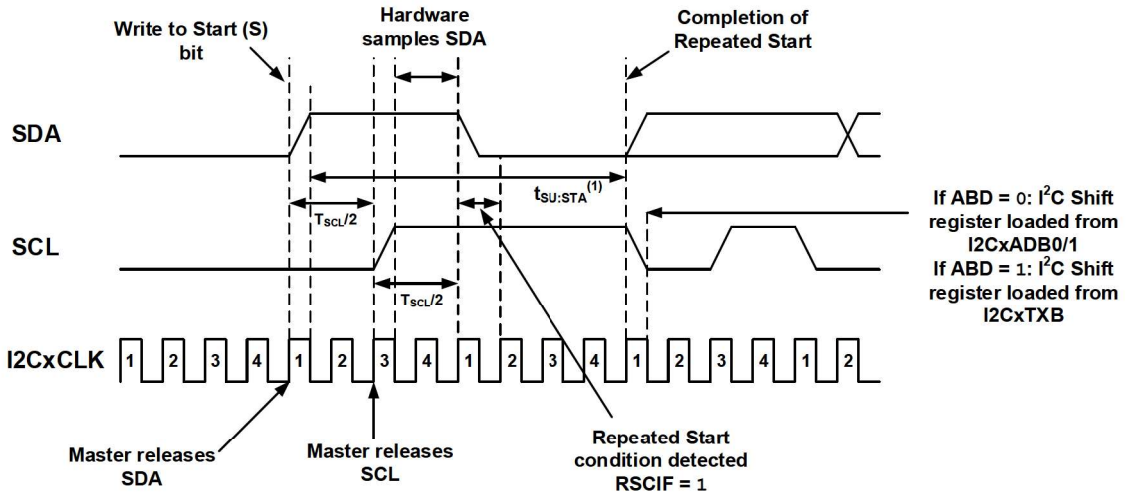

Important:
1. See device data sheet for Restart condition setup times.

36.4.2.6 Stop Condition Timing

A Stop condition occurs when SDA transitions from an Active state to an Idle state while SCL is Idle. Master hardware will issue a Stop condition when it has completed its current transmission and is ready to release control of the bus. A Stop condition is also issued after an error condition occurs, such as a bus time-out, or when a NACK condition is detected on the bus. User software may also generate a Stop condition by setting the Stop (P) bit.

After the $\overline{ACK}$/NACK sequence of the final byte of the transmitted/received packet, hardware pulls SCL low for half of an SCL period ($T_{SCL}/2$) (see figure below). After the half SCL period, hardware releases SCL, then samples SCL to ensure it is in an Idle state (SCL = 1). Master hardware then waits the duration of the Stop condition setup time ($T_{SU:STO}$) and releases SDA, setting the Stop Condition Interrupt Flag (PCIF). If the Stop Condition Interrupt Enable (PCIE) bit is also set, the generic I2CxIF is also set.

Important: At least one SCL low period must appear before a Stop condition is valid. If the SDA line transitions low, then high again, while SCL is high, the Stop condition is ignored, and a Start condition will be detected by the receiver.

Figure 36-36. Stop Condition Timing

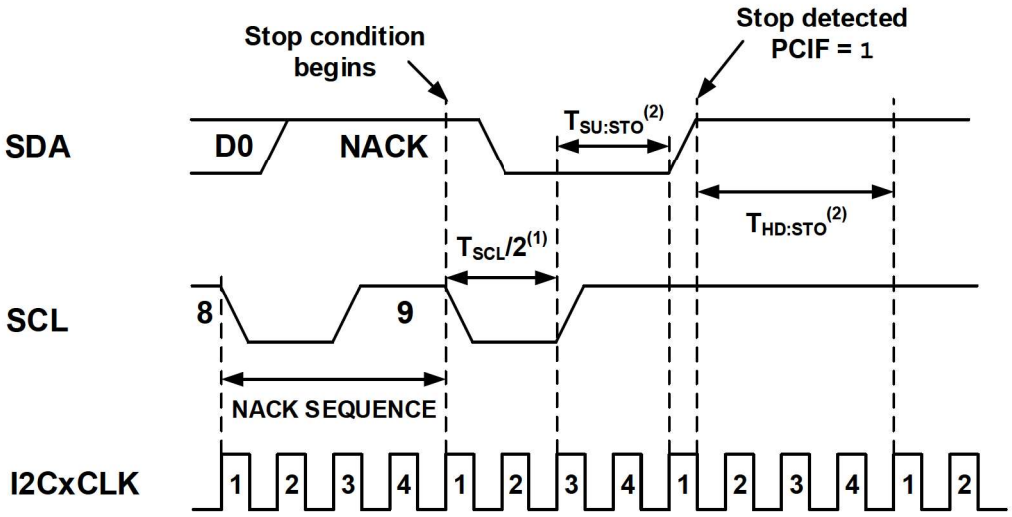

Important:
1. At least one SCL low period must appear before a Stop is valid.
2. See the device data sheet electrical specifications for Stop condition setup and hold times.

36.4.2.7 Master Operation in 7-Bit Addressing Modes

In Master 7-bit Addressing modes, the slave's 7-bit address and R/$\overline{W}$ bit value are loaded into either I2CxADB1 or I2CxTXB, depending on the Address Buffer Disable (ABD) bit setting. When the master wishes to read data from the slave, software must set the R/$\overline{W}$ bit (R/$\overline{W}$ = 1). When the master wishes to write data to the slave, software must clear the R/$\overline{W}$ bit (R/$\overline{W}$ = 0).

36.4.2.7.1 Master Transmission (7-Bit Addressing Mode)

The following section describes the sequence of events that occur when the module is transmitting data in 7-bit Addressing mode:

1. Depending on the configuration of the Address Buffer Disable (ABD) bit, one of two methods may be used to begin communication:
   - 1.1. When ABD is clear (ABD = 0), the address buffer, I2CxADB1, is enabled. In this case, the 7-bit slave address and R/$\overline{W}$ bit are loaded into I2CxADB1, with the R/$\overline{W}$ bit clear (R/$\overline{W}$ = 0). The number of data bytes are loaded into I2CxCNT, and the first data byte is loaded into I2CxTXB. After these registers are loaded, software must set the Start (S) bit to begin communication. Once the S bit is set, master hardware waits for the Bus Free (BFRE) bit to be set before transmitting the Start condition to avoid bus collisions.
   - 1.2. When ABD is set (ABD = 1), the address buffer is disabled. In this case, the number of data bytes are loaded into I2CxCNT, and the slave's 7-bit address and R/$\overline{W}$ bit are loaded into I2CxTXB. A write to I2CxTXB will cause master hardware to automatically issue a Start condition once the bus is idle (BFRE = 1). Software writes to the Start bit are ignored.
2. Master hardware waits for BFRE to be set, then shifts out the Start condition. Module hardware sets the Master Mode Active (MMA) bit and the Start Condition Interrupt Flag (SCIF). If the Start Condition Interrupt Enable (SCIE) bit is set, the generic I2CxIF is also set.

3. Master hardware transmits the 7-bit slave address and R/$\overline{W}$ bit.
4. If upon the 8th falling edge of SCL, I2CxTXB is empty (Transmit Buffer Empty Status (TXBE) = 1), I2CxCNT is non-zero (I2CxCNT != 0), and the Clock Stretching Disable (CSD) bit is clear (CSD = 0):
   – The I2C Transmit Interrupt Flag (I2CxTXIF) is set. If the I2C Transmit Interrupt Enable (I2CxTXIE) bit is also set, the generic I2CxIF is also set.
   – The Master Data Request (MDR) bit is set, and the clock is stretched, allowing time for software to load I2CxTXB with new data. Once I2CxTXB has been written, hardware releases SCL and clears MDR.
5. Hardware transmits the 9th clock pulse and waits for an $\overline{ACK}$/NACK response from the slave. If the master receives an $\overline{ACK}$, module hardware transfers the data from I2CxTXB into the transmit shift register, and I2CxCNT is decremented by one. If the master receives a NACK, hardware will attempt to issue a Stop condition. If the clock is currently being stretched by a slave, the master must wait until the bus is free before issuing the Stop.
6. Master hardware checks I2CxCNT for a zero value. If I2CxCNT is zero:
   6.1. If ABD is clear (ABD = 0), master hardware issues a Stop condition, or sets MDR if the Restart Enable (RSEN) bit is set and waits for software to set the Start bit to issue a Restart condition. CNTIF is set.
   6.2. If ABD is set (ABD = 1), master hardware issues a Stop condition, or sets MDR if RSEN is set and waits for software to load I2CxTXB with a new slave address. CNTIF is set.
7. Master hardware transmits the data byte.
8. If upon the 8th falling edge of SCL I2CxTXB is empty (TXBE = 1), I2CxCNT is non-zero (I2CxCNT != 0), and CSD is clear (CSD = 0):
   – I2CxTXIF is set. If the I2CxTXIE bit is also set, the generic I2CxIF is also set.
   – The MDR bit is set, and the clock is stretched, allowing time for software to load I2CxTXB with new data. Once I2CxTXB has been written, hardware releases SCL and clears MDR.

   If TXBE is set (TXBE = 1) and I2CxCNT is zero (I2CxCNT = 0):

   – I2CxTXIF is NOT set.
   – CNTIF is set.
   – Master hardware issues a Stop condition, setting PCIF.
9. Repeat Steps 5 – 8 until all data has been transmitted.

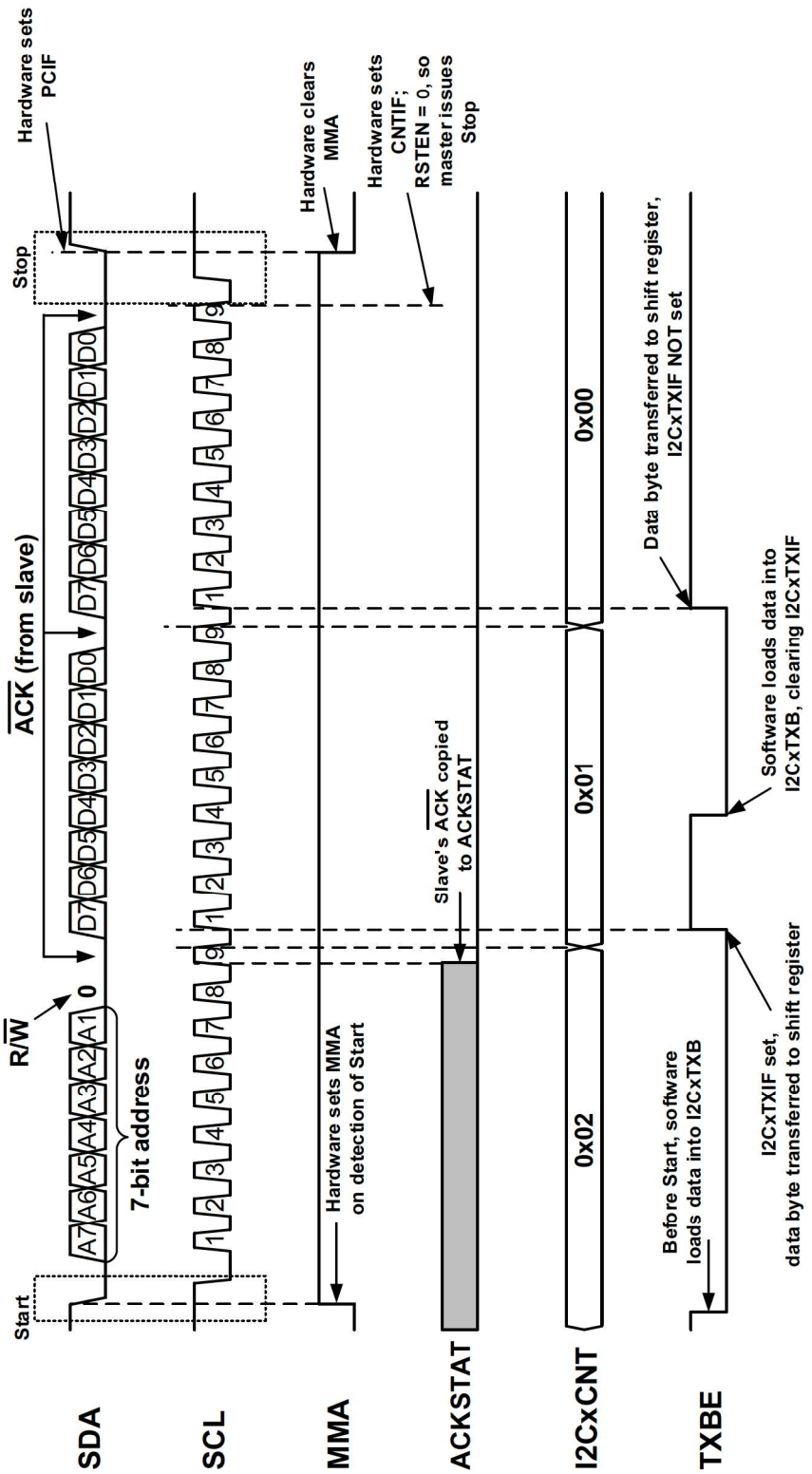

Figure 36-37. 7-Bit Master Mode Transmission

36.4.2.7.2 Master Reception (7-Bit Addressing Mode)

The following section describes the sequence of events that occur when the module is receiving data in 7-bit Addressing mode:

1. Depending on the configuration of the Address Buffer Disable (ABD) bit, one of two methods may be used to begin communication:
   - 1.1. When ABD is clear (ABD = 0), the address buffer, I2CxADB1, is enabled. In this case, the 7-bit slave address and R/$\overline{W}$ bit are loaded into I2CxADB1, with the R/$\overline{W}$ bit set (R/$\overline{W}$ = 1). The number of expected received data bytes are loaded into I2CxCNT. After these registers are loaded, software must set the Start (S) bit to begin communication. Once the S bit is set, master hardware waits for the Bus Free (BFRE) bit to be set before transmitting the Start condition to avoid bus collisions.
   - 1.2. When ABD is set (ABD = 1), the address buffer is disabled. In this case, the number of expected received data bytes are loaded into I2CxCNT, and the slave's 7-bit address and R/$\overline{W}$ bit are loaded into I2CxTXB. A write to I2CxTXB will cause master hardware to automatically issue a Start condition once the bus is idle (BFRE = 1). Software writes to the Start bit are ignored.
2. Master hardware waits for BFRE to be set, then shifts out the Start condition. Module hardware sets the Master Mode Active (MMA) bit and the Start Condition Interrupt Flag (SCIF). If the Start Condition Interrupt Enable (SCIE) bit is set, the generic I2CxIF is also set.
3. Master hardware transmits the 7-bit slave address and R/$\overline{W}$ bit.
4. Master hardware samples SCL to determine if the slave is stretching the clock, and continues to sample SCL until the line is sampled high.
5. Master hardware transmits the 9th clock pulse, and receives the $\overline{ACK}$/NACK response from the slave. If an $\overline{ACK}$ is received, master hardware receives the first seven bits of the data byte into the receive shift register.

   If a NACK is received, hardware sets the NACK Detect Interrupt Flag (NACKIF), and:

   - 5.1. ABD = 0: Master generates a Stop condition, or sets the MDR bit (if RSEN is also set) and waits for software to set the Start bit to generate a Restart condition.
   - 5.2. ABD = 1: Master generates a Stop condition, or sets the MDR bit (if RSEN is also set) and waits for software to load a new address into I2CxTXB. Software writes to the Start bit are ignored.

   If the NACK Detect Interrupt Enable (NACKIE) is also set, hardware sets the generic I2CxEIF bit.
6. If previous data remains in the I2C Receive Buffer (I2CxRXB) when the first seven bits of the new byte are received into the receive shift register (RXBF = 1), the MDR bit is set (MDR = 1), and the clock is stretched after the 7th falling edge of SCL. This allows the master time to read I2CxRXB, which clears the RXBF bit, and prevents receive buffer overflows. Once RXBF is clear, hardware releases SCL.
7. The master clocks in the 8th bit of the data byte into the receive shift register, then transfers the full byte into I2CxRXB. Master hardware sets the I2C Receive Interrupt Flag (I2CxRXIF) and RXBF, and if the I2C Receive Interrupt Enable (I2CxRXIE) is set, the generic I2CxIF is also set. Finally, I2CxCNT is decremented by one.
8. Master hardware checks I2CxCNT for a zero value.
   If I2CxCNT is non-zero (I2CxCNT != 0), hardware transmits the value of the Acknowledge Data (ACKDT) bit as the acknowledgement response to the slave. It is up to user software to properly configure ACKDT. In most cases, ACKDT should be clear (ACKDT = 0), which indicates an $\overline{ACK}$ response.

   If I2CxCNT is zero (I2CxCNT = 0), hardware transmits the value of the Acknowledge End of Count (ACKCNT) bit as the acknowledgement response to the slave. CNTIF is set, and master hardware either issues a Stop condition or a Restart condition. It is up to user software to properly configure ACKCNT. In most cases, ACKCNT should be set (ACKCNT = 1), which indicates a NACK response. When hardware detects a NACK on the bus, it automatically issues a Stop condition. If a NACK is not detected, the Stop will not be generated, which may lead to a stalled bus condition.
9. Master hardware receives the first seven bits of the next data byte into the receive shift register.
10. Repeat Steps 6 – 9 until all expected bytes have been received.

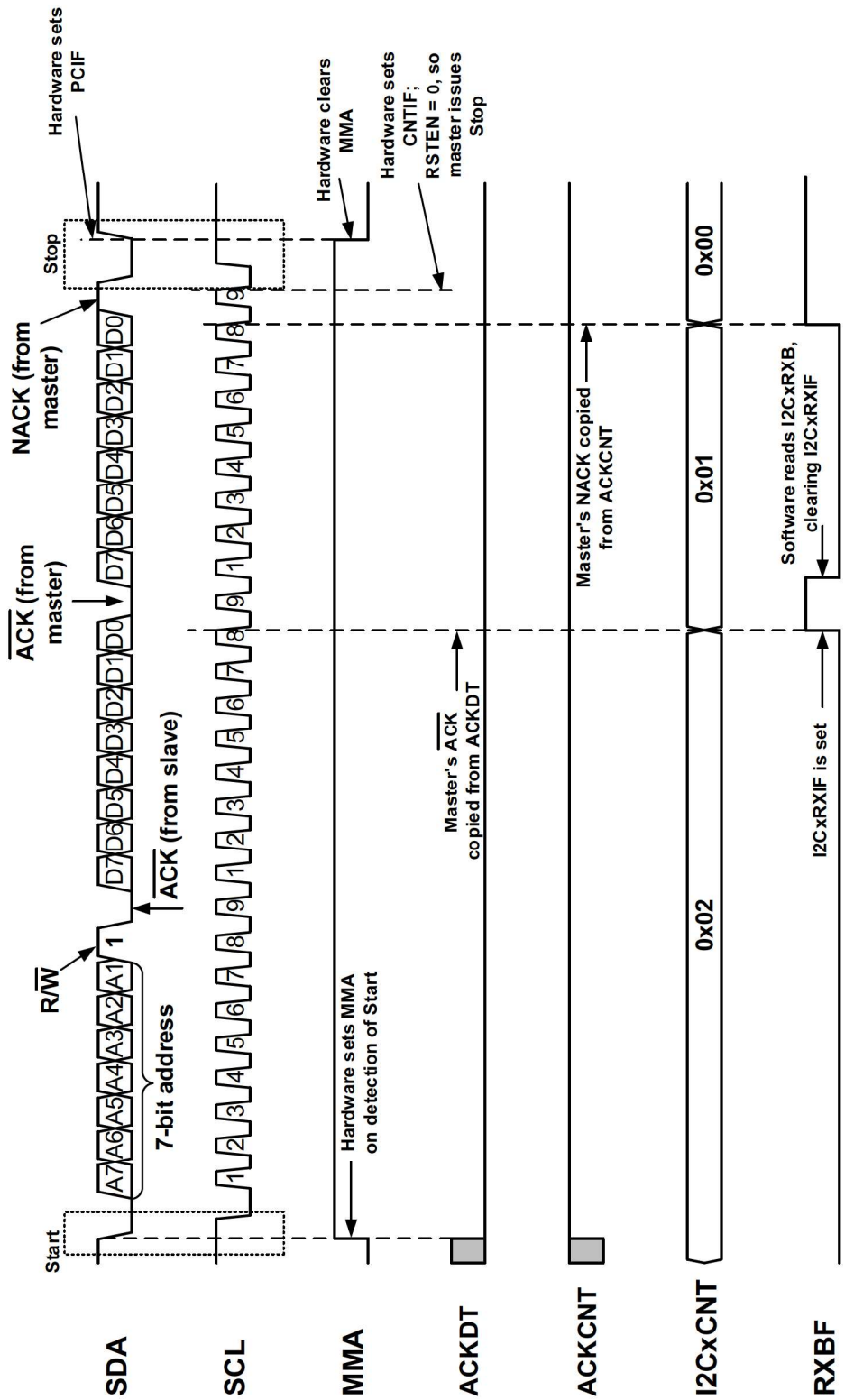

Figure 36-38. 7-Bit Master Mode Reception

36.4.2.8 Master Operation in 10-Bit Addressing Modes

In Master 10-bit Addressing modes, the slave's 10-bit address and R/$\overline{W}$ bit value are loaded into either the I2CxADB0 and I2CxADB1 registers (when ABD = 0), or I2CxTXB (when ABD = 1). When the master intends to read data from the slave, it must first transmit the full 10-bit address with the R/$\overline{W}$ bit clear (R/$\overline{W}$ = 0), issue a Restart condition, then transmit the address high byte with the R/$\overline{W}$ bit set (R/$\overline{W}$ = 1). When the master intends to write data to the slave, it must transmit the full 10-bit address with the R/$\overline{W}$ bit clear (R/$\overline{W}$ = 0).

36.4.2.8.1 Master Transmission (10-Bit)

The following section describes the sequence of events that occur when the module is transmitting data in 10-bit Addressing mode:

1. Depending on the configuration of the Address Buffer Disable (ABD) bit, one of two methods may be used to begin communication:
   - 1.1. When ABD is clear (ABD = 0), the address buffers, I2CxADB0 and I2CxADB1, are enabled. In this case, the address high byte is loaded into I2CxADB1 with the R/$\overline{W}$ bit clear, while the address low byte is loaded into I2CxADB0. I2CxCNT is loaded with the total number of data bytes to transmit, and the first data byte is loaded into I2CxTXB. After these registers are loaded, software must set the Start bit to begin communication.
   - 1.2. When ABD is set (ABD = 1), the address buffers are disabled. In this case, I2CxCNT must be loaded with the total number of bytes to transmit prior to loading I2CxTXB with the address high byte and R/$\overline{W}$ bit. A write to I2CxTXB forces module hardware to issue a Start condition automatically; software writes to the S bit are ignored.
2. Master hardware waits for BFRE to be set, then shifts out the Start condition. Module hardware sets the Master Mode Active (MMA) bit and the Start Condition Interrupt Flag (SCIF). If the Start Condition Interrupt Enable (SCIE) bit is also set, the generic I2CxIF is also set.
3. Master hardware transmits the address high byte and R/$\overline{W}$ bit from I2CxADB1.
4. Master hardware transmits the 9th clock pulse and shifts in the $\overline{ACK}$/NACK response from the slave. If the master receives a NACK, it issues a Stop condition.

   If the master receives and $\overline{ACK}$ and:
   - 4.1. ABD = 0: Hardware transmits the address low byte from I2CxADB0.
   - 4.2. ABD = 1: Hardware sets I2CxTXIF and the Master Data Request (MDR) bit and waits for software to load I2CxTXB with the address low byte. Software must load I2CxTXB to resume communication.
5. If upon the 8th falling edge of SCL I2CxTXB is empty (TXBE = 1), I2CxCNT is non-zero (I2CxCNT != 0), and the Clock Stretching Disable (CSD) bit is clear (CSD = 0):
   - I2CxTXIF is set. If the I2C Transmit Interrupt Enable (I2CxTXIE) bit is also set, the generic I2CxIF is also set.
   - MDR bit is set, and the clock is stretched, allowing time for software to load I2CxTXB with the address low byte. Once I2CxTXB has been written, hardware releases SCL and clears MDR.
6. Hardware transmits the 9th clock pulse and waits for an $\overline{ACK}$/NACK response from the slave. If the master receives an $\overline{ACK}$, module hardware transfers the data from I2CxTXB into the transmit shift register, and I2CxCNT is decremented by one. If the master receives a NACK, hardware will attempt to issue a Stop condition. If the clock is currently being stretched by a slave, the master must wait until the bus is free before issuing the Stop.
7. Master hardware checks I2CxCNT for a zero value. If I2CxCNT is zero:
   - 7.1. If ABD is clear (ABD = 0), master hardware issues a Stop condition, or sets MDR if the Restart Enable (RSEN) bit is set and waits for software to set the Start bit to issue a Restart condition. CNTIF is set.
   - 7.2. If ABD is set (ABD = 1), master hardware issues a Stop condition, or sets MDR if RSEN is set and waits for software to load I2CxTXB with a new slave address. CNTIF is set.
8. Master hardware transmits the data byte.
9. If upon the 8th falling edge of SCL I2CxTXB is empty (TXBE = 1), I2CxCNT is non-zero (I2CxCNT != 0), and CSD is clear (CSD = 0):
   - The I2CxTXIF bit is set. If the I2CxTXIE bit is also set, the generic I2CxIF is also set.

– The MDR bit is set, and the clock is stretched, allowing time for software to load I2CxTXB with new data. Once I2CxTXB has been written, hardware releases SCL and clears MDR.

If TXBE is set (TXBE = 1) and I2CxCNT is zero (I2CxCNT = 0):

– I2CxTXIF is NOT set.
– CNTIF is set.
– Master hardware issues a Stop condition, setting PCIF.

10. Repeat Steps 6 – 9 until all data has been transmitted.

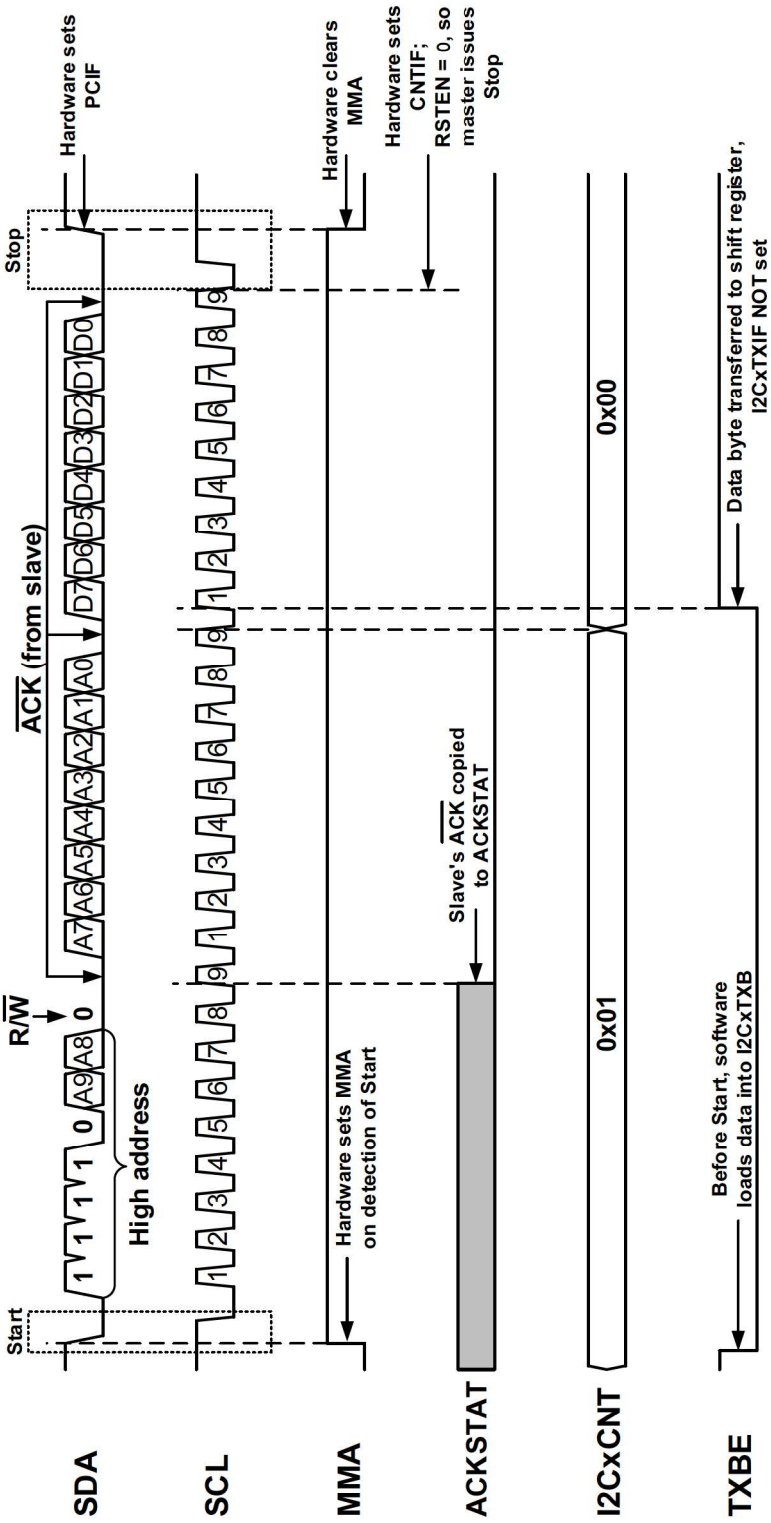

Figure 36-39. 10-Bit Master Mode Transmission

36.4.2.8.2 Master Reception (10-Bit Addressing Mode)

The following section describes the sequence of events that occur when the module is receiving data in 10-bit addressing mode:

1. Depending on the configuration of the Address Buffer Disable (ABD) bit, one of two methods may be used to begin communication:
   - 1.1. When ABD is clear (ABD = 0), the address buffers, I2CxADB0 and I2CxADB1, are enabled. In this case, the address high byte and R/$\overline{W}$ bit are loaded into I2CxADB1, with R/$\overline{W}$ clear (R/$\overline{W}$ = 0). The address low byte is loaded into I2CxADB0, and the Restart Enable (RSEN) bit is set by software. After these registers are loaded, software must set the Start (S) bit to begin communication. Once the S bit is set, master hardware waits for the Bus Free (BFRE) bit to be set before transmitting the Start condition to avoid bus collisions.
   - 1.2. When ABD is set (ABD = 1), the address buffers are disabled. In this case, the number of expected received bytes are loaded into I2CxCNT, the address high byte and R/$\overline{W}$ bit are loaded into I2CxTXB, with R/$\overline{W}$ clear (R/$\overline{W}$ = 0). A write to I2CxTXB will cause master hardware to automatically issue a Start condition once the bus is idle (BFRE = 1). Software writes to the Start bit are ignored.
2. Master hardware waits for BFRE to be set, then shifts out the Start condition. Module hardware sets the Master Mode Active (MMA) bit and the Start Condition Interrupt Flag (SCIF). If the Start Condition Interrupt Enable (SCIE) bit is set, the generic I2CxIF is also set.
3. Master hardware transmits the address high byte and R/$\overline{W}$ bit.
4. Master hardware samples SCL to determine if the slave is stretching the clock, and continues to sample SCL until the line is sampled high.
5. Master hardware transmits the 9th clock pulse, and receives the $\overline{ACK}$/NACK response from the slave.
   If a NACK was received, the NACK Detect Interrupt Flag (NACKIF) is set and the master immediately issues a Stop condition.

   If an $\overline{ACK}$ was received, module hardware transmits the address low byte.
6. Master hardware samples SCL to determine if the slave is stretching the clock, and continues to sample SCL until the line is sampled high.
7. Master hardware transmits the 9th clock pulse, and receives the $\overline{ACK}$/NACK response from the slave.
   If an $\overline{ACK}$ was received, hardware sets MDR, and waits for hardware or software to set the Start bit.

   If a NACK is received, hardware sets NACKIF, and:
   - 7.1. ABD = 0: Master generates a Stop condition, or sets the MDR bit (if RSEN is also set) and waits for software to set the Start bit to generate a Restart condition.
   - 7.2. ABD = 1: Master generates a Stop condition, or sets the MDR bit (if RSEN is also set) and waits for software to load a new address into I2CxTXB. Software writes to the Start bit are ignored.

   If the NACK Detect Interrupt Enable (NACKIE) is also set, hardware sets the generic I2CxEIF bit.
8. Software loads I2CxCNT with the expected number of received bytes.
9. If ABD is clear (ABD = 0), software sets the Start bit. If ABD is set (ABD = 1), software writes the address high byte with R/$\overline{W}$ bit into I2CxTXB, with R/$\overline{W}$ set (R/$\overline{W}$ = 1).
10. Master hardware transmits the Restart condition, which sets the Restart Condition Interrupt Flag (RSCIF) bit. If the Restart Condition Interrupt Enable (RSCIE) bit is set, the generic I2CxIF is set by hardware.
11. Master hardware transmits the high address byte and R/$\overline{W}$ bit.
12. Master hardware samples SCL to determine if the slave is stretching the clock, and continues to sample SCL until the line is sampled high.
13. Master hardware transmits the 9th clock pulse, and receives the $\overline{ACK}$/NACK response from the slave.
    If an $\overline{ACK}$ is received, master hardware receives the first seven bits of the data byte into the receive shift register.

    If a NACK is received, and:
    - 13.1. ABD = 0: Master generates a Stop condition, or sets the MDR bit (if RSEN is also set) and waits for software to set the Start bit to generate a Restart condition.
    - 13.2. ABD = 1: Master generates a Stop condition, or sets the MDR bit (if RSEN is also set) and waits for software to load a new address into I2CxTXB. Software writes to the Start bit are ignored.

14. If previous data is currently in I2CxRXB (RXBF = 1) when the first seven bits are received by the receive shift register, hardware sets MDR, and the clock is stretched after the 7th falling edge of SCL. This allows software to read I2CxRXB, which clears the RXBF bit, and prevents a receive buffer overflow. Once the RXBF bit is cleared, hardware releases SCL.
15. Master hardware clocks in the 8th bit of the data byte into the receive shift register, then transfers the complete byte into I2CxRXB, which sets the I2CxRXIF and RXBF bits. If I2CxRXIE is also set, hardware sets the generic I2CxIF bit. I2CxCNT is decremented by one.
16. Hardware checks I2CxCNT for a zero value.
    If I2CxCNT is non-zero (I2CxCNT != 0), hardware transmits the value of the Acknowledge Data (ACKDT) bit as the acknowledgement response to the slave. It is up to user software to properly configure ACKDT. In most cases, ACKDT should be clear (ACKDT = 0), which indicates an $\overline{\text{ACK}}$ response.

    If I2CxCNT is zero (I2CxCNT = 0), hardware transmits the value of the Acknowledge End of Count (ACKCNT) bit as the acknowledgement response to the slave. CNTIF is set, and master hardware either issues a Stop condition or a Restart condition. It is up to user software to properly configure ACKCNT. In most cases, ACKCNT should be set (ACKCNT = 1), which indicates a NACK response. When hardware detects a NACK on the bus, it automatically issues a Stop condition. If a NACK is not detected, the Stop will not be generated, which may lead to a stalled bus condition.
17. Master hardware receives the first seven bits of the next data byte into the receive shift register.
18. Repeat Steps 14 – 17 until all expected bytes have been received.

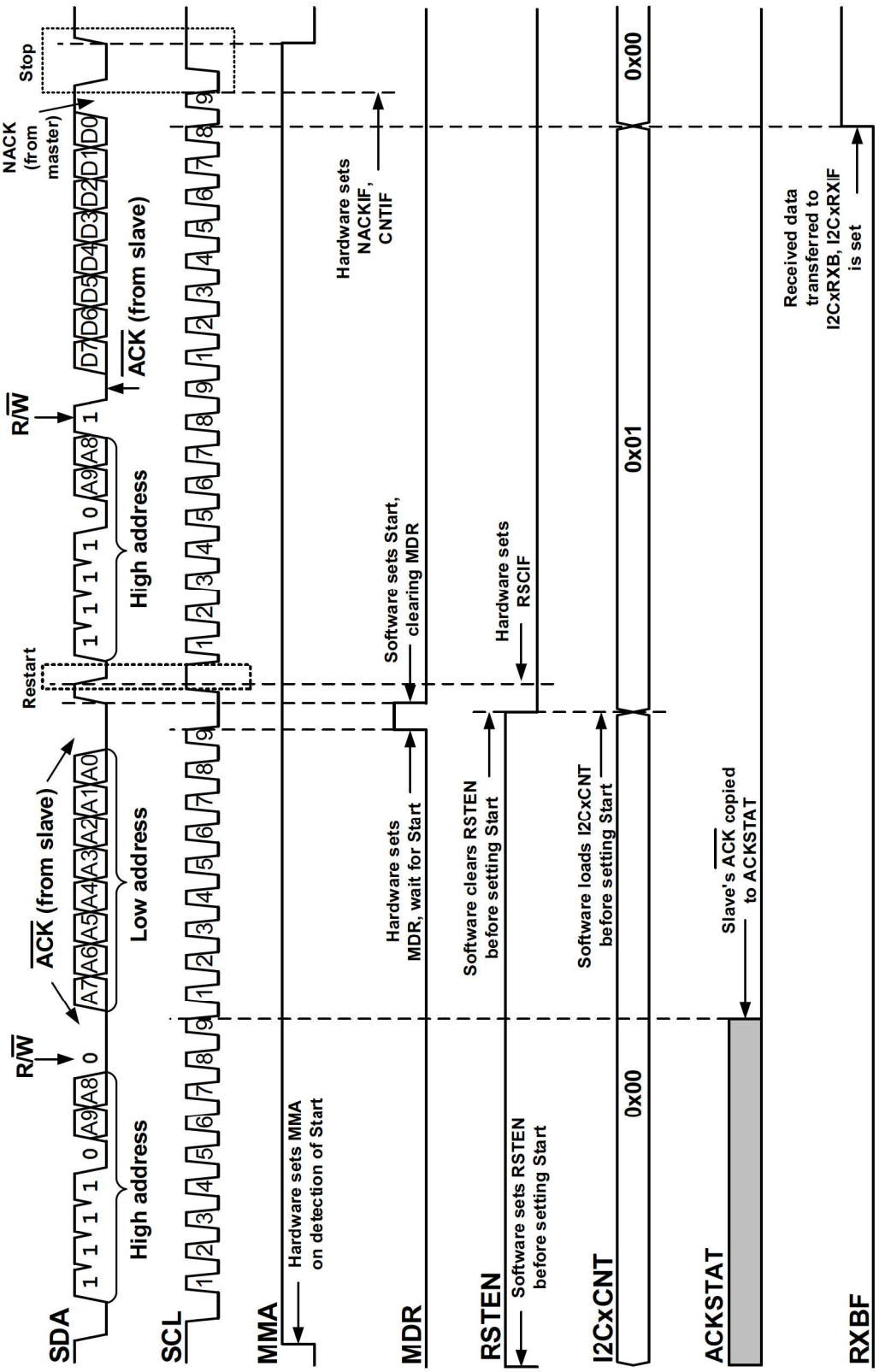

Figure 36-40. 10-Bit Master Mode Reception

36.4.3 I²C Multi-Master Mode Operation

In Multi-Master mode, multiple master devices reside on the same bus. A single device, or all devices, may act as both a master and a slave. Control of the bus is achieved through clock synchronization and bus arbitration.

The Bus Free (BFRE) bit is used to determine if the bus is free. When BFRE is set (BFRE = 1), the bus is in an Idle state, allowing a master device to take control of the bus.

In Multi-Master mode, the Address Interrupt and Hold Enable (ADRIE) bit must be set (ADRIE = 1), and the Clock Stretching Disable (CSD) bit must be clear (CSD = 0), in order for a master device to be addressed as a slave.

When a matching address is received into the receive shift register, the SMA bit is set, and the Address Interrupt Flag (ADRIF) bit is set. Since ADRIE is also set, hardware sets the Slave Clock Stretching (CSTR) bit, and hardware stretches the clock to allow time for software to respond to the master device being addressed as a slave. Once the address has been processed, software must clear CSTR to resume communication.

Important: Slave hardware has priority over master hardware in Multi-Master mode. Master mode communication can only be initiated when SMA = 0.

36.4.3.1 Multi-Master Mode Clock Synchronization

In a multi-master system, each master may begin to generate a clock signal as soon as the bus is idle. Clock synchronization allows all devices on the bus to use a single SCL signal.

When a high-to-low transition on SCL occurs, all active master devices begin SCL low period timing, with their clocks held low until their low hold time expires and the high state is reached. If one master's clock signal is still low, SCL will be held low until that master reaches its high state. During this time, all other master devices are held in a Wait state (see figure below).

Once all masters have counted off their low period times, SCL is released high, and all master devices begin counting their high periods. The first master to complete its high period pulls the SCL line low again.

This means that when the clocks are synchronized, the SCL low period is determined by the master with the longest SCL low period, while the SCL high period is determined by the master device with the shortest SCL high period.

Important: The I²C Specification does not require the SCL signal to have a 50% duty cycle. In other words, one master's clock signal may have a low time that is 60% of the SCL period and a high time that is 40% of the SCL period, while another master may be 50/50. This creates a timing difference between the two clock signals, which may result in data loss.

Figure 36-41. Clock Synchronization during Arbitration

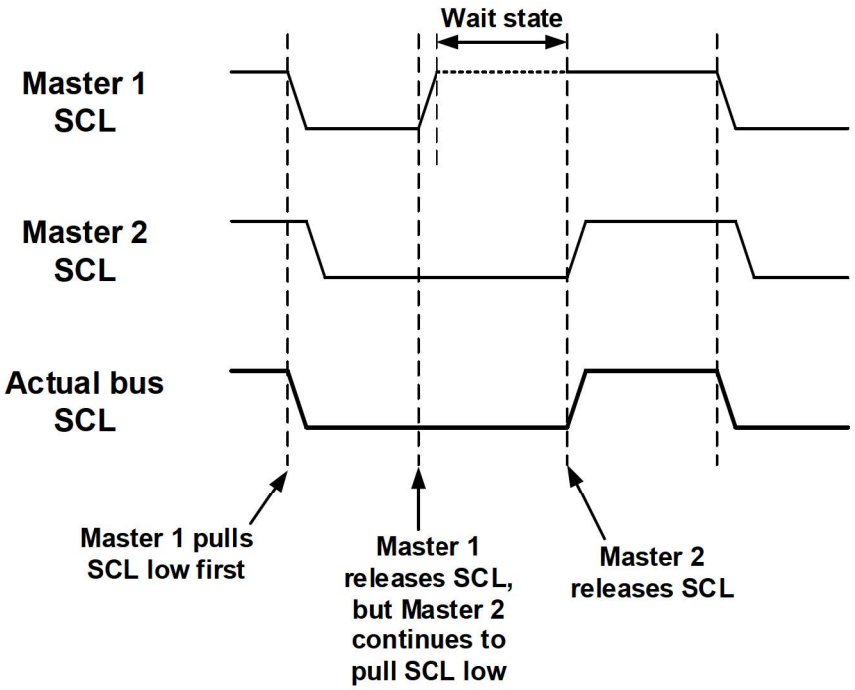

36.4.3.2 Multi-Master Mode Bus Arbitration

When the bus is idle, any master device may attempt to take control of the bus. Two or more master devices may issue a Start condition within the minimum hold time ($T_{HD:STA}$), which triggers a valid Start on the bus. The master devices must then compete using bus arbitration to determine who takes control of the bus and completes their transaction.

Bus arbitration takes place bit by bit, and it may be possible for two masters who have identical messages to complete the entire transaction without either device losing arbitration.

During every bit period, while SCL is high each master device compares the actual signal level of SDA to the signal level the master actually transmitted. SDA sampling is performed during the SCL high period because the SDA data must be stable during this period; therefore, the first master to detect a low signal level on SDA while it expects a high signal level loses arbitration. In this case, the 'losing' master device detects a bus collision and sets the Bus Collision Detect Interrupt Flag (BCLIF), and if the Bus Collision Detect Interrupt Enable (BCLIE) bit is set, the generic I2CxEIF is also set.

Arbitration can be lost in any of the following states:

- Address transfer
- Data transfer
- Start condition
- Restart condition
- Acknowledge sequence
- Stop condition

If a collision occurs during the data transfer phase, the transmission is halted and both SCL and SDA are released by hardware. If a collision occurs during a Start, Restart, Acknowledge, or Stop, the operation is aborted and hardware releases SCL and SDA. If a collision occurs during the addressing phase, the master that 'wins' arbitration may be

attempting to address the 'losing' master as a slave. In this case, the master that lost arbitration must switch to its Slave mode and check to see if an address matches.

Important: The I^2C Specification states that a bus collision cannot occur during a Start condition. If a collision occurs during a Start, BCLIF will be set during the addressing phase.

User software must clear BCLIF to resume operation.

Figure 36-42. Bus Collision

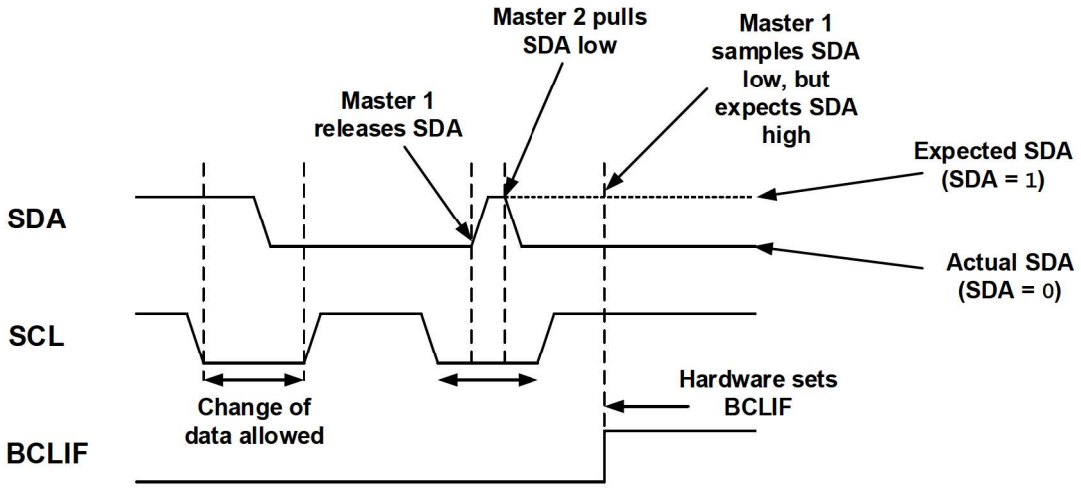

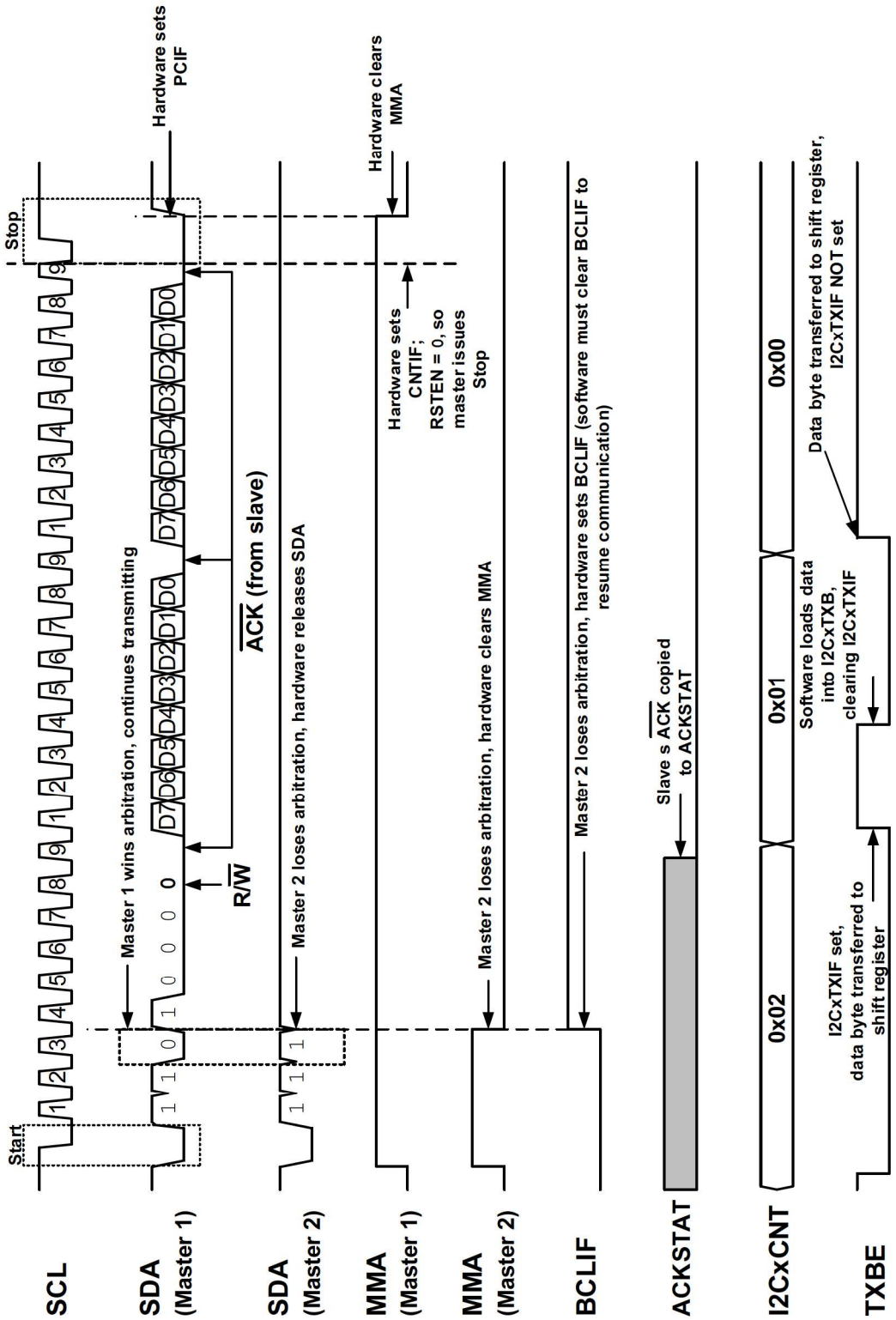

Figure 36-43. Multi-Master Mode Transmission

36.5 Register Definitions: I²C Control

Long bit name prefixes for the I²C peripherals are shown in the following table. Refer to the **"Long Bit Names"** section in the **"Register and Bit Naming Conventions"** chapter for more information.

Table 36-3. I²C Long Bit Name Prefixes

Peripheral	Bit Name Prefix
I2C1	I2C1

36.5.1 I2CxCON0

Name: I2CxCON0
Address: 0x0294

I2C Control Register 0

Bit	7	6	5	4	3	2	1	0
	EN	RSEN	S	CSTR	MDR	MODE[2:0]		
Access	R/W	R/W	R/W/HS/HC	R/C/HS/HC	R	R/W	R/W	R/W
Reset	0	0	0	0	0	0	0	0

Bit 7 – EN I2C Module Enable(1,2)

Value	Description
1	The I²C module is enabled
0	The I²C module is disabled

Bit 6 – RSEN Restart Enable (*used only when MODE = 1xx*)

Value	Description
1	Hardware sets MDR on 9th falling SCL edge (when I2CxCNT = 0 or ACKSTAT = 1)
0	Hardware issues Stop condition on 9th falling SCL edge (when I2CxCNT = 0 or ACKSTAT = 1)

Bit 5 – S Master Start (*used only when MODE = 1xx*)

Value	Condition	Description
1	MMA = 0:	Set by write to I2CxTXB or S bit, hardware issues Start condition
0	MMA = 0:	Cleared by hardware after sending Start condition
1	MMA = 1 and MDR = 1:	Set by write to I2CxTXB or S bit, communication resumes with a Restart condition
0	MMA = 1 and MDR = 1:	Cleared by hardware after sending Restart condition

Bit 4 – CSTR Slave Clock Stretching(3)

Value	Condition	Description
1		Clock is held low (clock stretching)
0		Enable clocking, SCL control is released
	SMA = 1 and RXBF = 1(6):	Set by hardware on 7th falling SCL edge User must read I2CxRXB and clear CSTR to release SCL
	SMA = 1 and TXBE = 1 and I2CxCNT != 0:	Set by hardware on 8th falling SCL edge User must write to I2CxTXB and clear CSTR to release SCL
	when ADRIE = 1(4):	Set by hardware on 8th falling edge of matching received address User must clear CSTR to release SCL
	SMA = 1 and WRIE = 1:	Set by hardware on 8th falling SCL edge of received data byte User must clear CSTR to release SCL
	SMA = 1 and ACKTIE = 1:	Set by hardware on 9th falling SCL edge User must clear CSTR to release SCL

Bit 3 – MDR Master Data Request (*Master pause*)

Value	Condition	Description
1		Master state machine pauses until data is read/written (SCL is held low)
0		Master clocking of data is enabled
	MMA = 1 and RXBF = 1 (*pause for RX*):	Set by hardware on 7th falling SCL edge User must read I2CxRXB to release SCL
	MMA = 1 and TXBE = 1 and I2CxCNT != 0 (*pause for TX*):	Set by hardware on the 8th falling SCL edge User must write to I2CxTXB to release SCL

Value	Condition	Description
	RSEN = 1 and MMA = 1 and (I2CxCNT = 0 or ACKSTAT = 1) (*pause for Restart*):	Set by hardware on 9th falling SCL edge User must set S bit or write to I2CxTXB to release SCL and issue a Restart condition

Bits 2:0 – MODE[2:0] I2C Mode Select

Value	Description
111	I^2C Multi-Master mode (SMBus 2.0 Host)(5)
110	I^2C Multi-Master mode (SMBus 2.0 Host)(5)
101	I^2C Master mode, 10-bit address
100	I^2C Master mode, 7-bit address
011	I^2C Slave mode, one 10-bit address with masking
010	I^2C Slave mode, two 10-bit addresses
001	I^2C Slave mode, two 7-bit addresses with masking
000	I^2C Slave mode, four 7-bit addresses

Notes:

1. SDA and SCL pins must be configured as open-drain I/Os and use either internal or external pull-up resistors.
2. SDA and SCL signals must configure both the input and output PPS registers for each signal.
3. CSTR can be set by multiple hardware sources; all sources must be addressed by user software before the SCL line can be released.
4. SMA is set on the same SCL edge as CSTR for a matching received address.
5. In this mode, ADRIE should be set, allowing an interrupt to clear the BCLIF condition and the $\overline{\text{ACK}}$ of a matching address.
6. In 10-bit Slave mode (when ABD = 1), CSTR will be set when the high address has not been read from I2CxRXB before the low address is shifted in.

36.5.2 I2CxCON1

Name: I2CxCON1
Address: 0x0295

I2C Control Register 1

Bit	7	6	5	4	3	2	1	0
	ACKCNT	ACKDT	ACKSTAT	ACKT	P	RXO	TXU	CSD
Access	R/W	R/W	R	R	R/S/HC	R/W/HS	R/W/HS	R/W
Reset	0	0	0	0	0	0	0	0

Bit 7 – ACKCNT Acknowledge End of Count(2)

Value	Condition	Description
1	I2CxCNT = 0	Not Acknowledge (NACK) copied to SDA output
0	I2CxCNT = 0	Acknowledge ($\overline{ACK}$) copied to SDA output

Bit 6 – ACKDT Acknowledge Data(1,2)

Value	Condition	Description
1	Matching received address	Not Acknowledge (NACK) copied to SDA output
0	Matching received address	Acknowledge ($\overline{ACK}$) copied to SDA output
1	I2CxCNT != 0	Not Acknowledge (NACK) copied to SDA output
0	I2CxCNT != 0	Acknowledge ($\overline{ACK}$) copied to SDA output

Bit 5 – ACKSTAT Acknowledge Status (*Transmission only*)

Value	Description
1	Acknowledge was not received for the most recent transaction
0	Acknowledge was received for the most recent transaction

Bit 4 – ACKT Acknowledge Time Status

Value	Description
1	Indicates that the bus is in an Acknowledge sequence, set on the 8th falling SCL edge
0	Not in an Acknowledge sequence, cleared on the 9th rising SCL edge

Bit 3 – P Master Stop(4)

Value	Condition	Description
1	MMA = 1	Initiate a Stop condition
0	MMA = 1	Cleared by hardware after sending Stop

Bit 2 – RXO Receive Overflow Status (*used only when* MODE = *0xx or MODE* = *11x*)(3)

Value	Description
1	Set when SMA = 1 and a master receives data when RXBF = 1
0	No slave receive overflow condition

Bit 1 – TXU Transmit Underflow Status (*used only when* MODE = *0xx or* MODE = *11x*)(3)

Value	Description
1	Set when SMA = 1 and a master transmits data when TXBE = 1
0	No slave transmit underflow condition

Bit 0 – CSD Clock Stretching Disable (*used only when* MODE = *0xx or* MODE = *11x*)

Value	Description
1	When SMA = 1, the CSTR bit will not be set
0	Slave clock stretching proceeds normally

Notes:

1. Software writes to ACKDT must be followed by a minimum SDA setup time before clearing CSTR.
2. A NACK may still be generated by hardware when bus errors are present as indicated by the I2CxSTAT1 or I2CxERR registers.
3. This bit can only be set when CSD = 1.
4. If SCL is high (SCL = 1) when this bit is set, the current clock pulse will complete (SCL = 0) with the proper SCL/SDA timing required for a valid Stop condition; any data in the transmit or receive shift registers will be lost.

36.5.3 I2CxCON2

Name: I2CxCON2
Address: 0x0296

I2C Control Register 2

Bit	7	6	5	4	3	2	1	0
	ACNT	GCEN	FME	ABD	SDAHT[1:0]		BFRET[1:0]	
Access	R/W	R/W	R/W	R/W	R/W	R/W	R/W	R/W
Reset	0	0	0	0	0	0	0	0

Bit 7 – ACNT Auto-Load I2C Count Register Enable

Value	Description
1	The first transmitted/received byte after the address is automatically loaded into the I2CxCNT register
0	Auto-load of I2CxCNT is disabled

Bit 6 – GCEN General Call Address Enable (*used when* MODE = `00x` *or MODE* = `11x`)

Value	Description
1	General Call Address (`0x00`) causes an address match event
0	General Call Addressing is disabled

Bit 5 – FME Fast Mode Enable

Value	Description
1	SCL frequency (F_{SCL}) = $F_{I2CxCLK}$/**4**
0	SCL frequency (F_{SCL}) = $F_{I2CxCLK}$/**5**

Bit 4 – ABD Address Buffer Disable

Value	Description
1	Address buffers are disabled; Received address is loaded into I2CxRXB, address to transmit is loaded into I2CxTXB
0	Address buffers are enabled; Received address is loaded into I2CxADB0/I2CxADB1, address to transmit is loaded into I2CxADB0/ I2CxADB1

Bits 3:2 – SDAHT[1:0] SDA Hold Time Selection

Value	Description
11	**Reserved**
10	Minimum of 30 ns hold time on SDA after the falling SCL edge
01	Minimum of 100 ns hold time on SDA after the falling SCL edge
00	Minimum of 300 ns hold time on SDA after the falling SCL edge

Bits 1:0 – BFRET[1:0] Bus Free Time Selection

Value	Description
11	64 I2CxCLK pulses
10	32 I2CxCLK pulses
01	16 I2CxCLK pulses
00	8 I2CxCLK pulses

36.5.4 I2CxSTAT0

Name: I2CxSTAT0
Address: 0x0298

I2C Status Register 0

Bit	7	6	5	4	3	2	1	0
	BFRE	SMA	MMA	R	D			
Access	R	R	R	R	R			
Reset	0	0	0	0	0			

Bit 7 – BFRE Bus Free Status(2)

Value	Description
1	Indicates an Idle bus; both SCL and SDA have been high for the time selected by the BFRET bits
0	Bus is not Idle

Bit 6 – SMA Slave Mode Active Status

Value	Description
1	Slave mode is active Set after the 8th falling SCL edge of a received matching 7-bit slave address Set after the 8th falling SCL edge of a matching received 10-bit slave **low** address Set after the 8th falling SCL edge of a received matching 10-bit slave **high w/read** address, only after a previous received matching **high and low w/write** address
0	Slave mode is not active Cleared when any Restart/Stop condition is detected on the bus Cleared by BTOIF and BCLIF conditions

Bit 5 – MMA Master Mode Active Status

Value	Description
1	Master mode is active Set when master state machine asserts a Start condition
0	Master mode is not active Cleared when BCLIF is set Cleared when Stop condition is issued Cleared for BTOIF condition after the master successfully shifts out a Stop condition

Bit 4 – R Read Information(1)

Value	Description
1	Indicates that the last matching received address was a Read request
0	Indicates that the last matching received address was a Write request

Bit 3 – D Data

Value	Description
1	Indicates that the last byte received or transmitted was data
0	Indicates that the last byte received or transmitted was an address

Notes:

1. This bit holds the R/$\overline{W}$ bit information following the last received address match. Addresses transmitted by the master do not affect the master's R bit, and addresses appearing on the bus without a match do not affect the R bit.
2. I2CxCLK must have a valid clock source selected for this bit to function.

36.5.5 I2CxSTAT1

Name: I2CxSTAT1
Address: 0x0299

I2C Status Register 1

Bit	7	6	5	4	3	2	1	0
	TXWE		TXBE		RXRE	CLRBF		RXBF
Access	R/W/HS		R		R/W/HS	R/S		R
Reset	0		1		0	0		0

Bit 7 – TXWE Transmit Write Error Status(1)

Value	Description
1	A new byte of data was written into I2CxTXB when it was full (*must be cleared by software*)
0	No transmit write error occurred

Bit 5 – TXBE Transmit Buffer Empty Status(2)

Value	Description
1	I2CxTXB is empty (*cleared by writing to the I2CxTXB register*)
0	I2CxTXB is full

Bit 3 – RXRE Receive Read Error Status(1)

Value	Description
1	A byte of data was read from I2CxRXB when it was empty (*must be cleared by software*)
0	No receive overflow occurred

Bit 2 – CLRBF Clear Buffer(3)

Value	Description
1	Setting this bit clears/empties the receive and transmit buffers, causing a Reset of RXBF and TXBE Setting this bit clears the I2CxRXIF and I2CxTXIF interrupt flags

Bit 0 – RXBF Receive Buffer Full Status(2)

Value	Description
1	I2CxRXB is full (*cleared by reading the I2CxRXB register*)
0	I2CxRXB is empty

Notes:

1. This bit, when set, will cause a NACK to be issued.
2. Used as a trigger source for DMA operations.
3. This bit is special function; it can only be set by user software and always reads '0'.

36.5.6 I2CxPIR

Name: I2CxPIR
Address: 0x029A

I2C Interrupt Flag Register

Bit	7	6	5	4	3	2	1	0
	CNTIF	ACKTIF		WRIF	ADRIF	PCIF	RSCIF	SCIF
Access	R/W/HS	R/W/HS		R/W/HS	R/W/HS	R/W/HS	R/W/HS	R/W/HS
Reset	0	0		0	0	0	0	0

Bit 7 – CNTIF Byte Count Interrupt Flag(1)

Value	Description
1	Set on the 9th falling SCL edge when I2CxCNT = 0
0	I2CxCNT value is not zero

Bit 6 – ACKTIF Acknowledge Status Time Interrupt Flag (*used only when* MODE = *0xx or MODE* = *11x*)(1,2)

Value	Description
1	Acknowledge sequence detected, set on the 9th falling SCL edge for any byte when addressed as a slave
0	Acknowledge sequence not detected

Bit 4 – WRIF Data Write Interrupt Flag (*used only when* MODE = *0xx or MODE* = *11x*)(1)

Value	Description
1	Data byte detected, set on the 8th falling SCL edge for a received data byte
0	Data byte not detected

Bit 3 – ADRIF Address Interrupt Flag (*used only when* MODE = *0xx or MODE* = *11x*)(1)

Value	Description
1	Address detected, set on the 8th falling SCL edge for a matching received address byte
0	Address not detected

Bit 2 – PCIF Stop Condition Interrupt Flag(1)

Value	Description
1	Stop condition detected
0	Stop condition not detected

Bit 1 – RSCIF Restart Condition Interrupt Flag(1)

Value	Description
1	Restart condition detected
0	Restart condition not detected

Bit 0 – SCIF Start Condition Interrupt Flag(1)

Value	Description
1	Start condition detected
0	Start condition not detected

Notes:

1. Enabled interrupt flags are OR'ed to produce the PIRx[I2CxIF] bit.
2. ACKTIF is not set by a matching 10-bit high address byte with the R/$\overline{W}$ bit clear. It is only set after the matching low address byte is shifted in.

36.5.7 I2CxPIE

Name: I2CxPIE
Address: 0x029B

I2C Interrupt and Hold Enable Register

Bit	7	6	5	4	3	2	1	0
	CNTIE	ACKTIE		WRIE	ADRIE	PCIE	RSCIE	SCIE
Access	R/W	R/W		R/W	R/W	R/W	R/W	R/W
Reset	0	0		0	0	0	0	0

Bit 7 – CNTIE Byte Count Interrupt Enable(1)

Value	Description
1	Enables Byte Count interrupts
0	Disables Byte Count interrupts

Bit 6 – ACKTIE Acknowledge Status Time Interrupt and Hold Enable(1,2)

Value	Description
1	Enables Acknowledge Status Time Interrupt and Hold condition
0	Disables Acknowledge Status Time Interrupt and Hold condition

Bit 4 – WRIE Data Write Interrupt and Hold Enable(1,3)

Value	Description
1	Enables Data Write Interrupt and Hold condition
0	Disables Data Write Interrupt and Hold condition

Bit 3 – ADRIE Address Interrupt and Hold Enable(1,4)

Value	Description
1	Enables Address Interrupt and Hold condition
0	Disables Address Interrupt and Hold condition

Bit 2 – PCIE Stop Condition Interrupt Enable(1)

Value	Description
1	Enables interrupt on the detection of a Stop condition
0	Disables interrupt on the detection of a Stop condition

Bit 1 – RSCIE Restart Condition Interrupt Enable(1)

Value	Description
1	Enables interrupt on the detection of a Restart condition
0	Disables interrupt on the detection of a Restart condition

Bit 0 – SCIE Stop Condition Interrupt Enable(1)

Value	Description
1	Enables interrupt on the detection of a Start condition
0	Disables interrupt on the detection of a Start condition

Notes:

1. Enabled interrupt flags are OR'ed to produce the PIRx[I2CxIF] bit.
2. When ACKTIE is set (ACKTIE = 1) and ACKTIF becomes set (ACKTIF = 1), if an $\overline{\text{ACK}}$ is generated, CSTR is also set. If a NACK is generated, CSTR remains unchanged.
3. When WRIE is set (WRIE = 1) and WRIF becomes set (WRIF = 1), CSTR is also set.
4. When ADRIE is set (ADRIE = 1) and ADRIF becomes set (ADRIF = 1), CSTR is also set.

36.5.8 I2CxERR

Name: I2CxERR
Address: 0x0297

I2C Error Register

Bit	7	6	5	4	3	2	1	0
		BTOIF	BCLIF	NACKIF		BTOIE	BLCIE	NACKIE
Access		R/W/HS	R/W/HS	R/W/HS		R/W	R/W	R/W
Reset		0	0	0		0	0	0

Bit 6 – BTOIF Bus Timeout Interrupt Flag(1,2)

Value	Description
1	Bus timeout event occurred
0	No bus timeout event occurred

Bit 5 – BCLIF Bus Collision Detect Interrupt Flag(1)

Value	Description
1	Bus collision detected
0	No bus collision occurred

Bit 4 – NACKIF NACK Detect Interrupt Flag(1,3,4)

Value	Description
1	NACK detected on the bus (when SMA = 1 or MMA = 1)
0	No NACK detected on the bus

Bit 2 – BTOIE Bus Timeout Interrupt Enable

Value	Description
1	Enable Bus Timeout interrupts
0	Disable Bus Timeout interrupts

Bit 1 – BLCIE Bus Collision Detect Interrupt Enable

Value	Description
1	Enable Bus Collision interrupts
0	Disable Bus Collision interrupts

Bit 0 – NACKIE NACK Detect Interrupt Enable

Value	Description
1	Enable NACK detect interrupts
0	Disable NACK detect interrupts

Notes:

1. Enabled error interrupt flags are OR'ed to produce the PIRx[I2CxEIF] bit.
2. User software must select the Bus Timeout source in the I2CxBTOC register.
3. NACKIF is also set when any of the TXWE, RXRE, TXU, or RXO bits are set.
4. NACKIF is not set for the NACK response to a non-matching slave address.

36.5.9 I2CxCLK

Name: I2CxCLK
Address: 0x029E

I2C Clock Selection Register

Bit	7	6	5	4	3	2	1	0
					CLK[3:0]			
Access					R/W	R/W	R/W	R/W
Reset					0	0	0	0

Bits 3:0 – CLK[3:0] I2C Clock Selection

Table 36-4.

CLK	Selection
1111 - 1110	Reserved
1101	CLC4_OUT
1100	CLC3_OUT
1011	CLC2_OUT
1010	CLC1_OUT
1001	SMT1_OUT
1000	TMR4_Postscaler_OUT
0111	TMR2_Postscaler_OUT
0110	TMR0_OUT
0101	EXTOSC
0100	Clock Reference Output
0011	MFINTOSC (500 kHz)
0010	HFINTOSC
0001	F_{OSC} (System Clock)
0000	$F_{OSC}/4$

36.5.10 I2CxBAUD

Name: I2CxBAUD
Address: 0x029D

I2C Baud Rate Prescaler

Bit	7	6	5	4	3	2	1	0
	BAUD[7:0]							
Access	R/W	R/W	R/W	R/W	R/W	R/W	R/W	R/W
Reset	0	0	0	0	0	0	0	0

Bits 7:0 – BAUD[7:0] Baud Rate Prescaler Selection

Value	Description
n	Prescaled I2C Clock Frequency (F_{PRECLK}) = $\frac{I2CxCLK}{(BAUD + 1)}$

Note: It is recommended to write this register only when the module is Idle (MMA = 0 or SMA = 0), or when the module is clock stretching (CSTR = 1 or MDR = 1).

36.5.11 I2CxCNT

Name: I2CxCNT
Address: 0x028C

I2C Byte Count Register(1,2)

Bit	15	14	13	12	11	10	9	8
	CNT[15:8]							
Access	R/W	R/W	R/W	R/W	R/W	R/W	R/W	R/W
Reset	0	0	0	0	0	0	0	0

Bit	7	6	5	4	3	2	1	0
	CNT[7:0]							
Access	R/W	R/W	R/W	R/W	R/W	R/W	R/W	R/W
Reset	0	0	0	0	0	0	0	0

Bits 15:0 – CNT[15:0] Byte Count

Condition	Description
If receiving data:	Count value decremented on 8th falling SCL edge when a new byte is loaded into I2CxRXB
If transmitting data:	Count value is decremented on the 9th falling SCL edge when a new byte is moved from I2CxTXB

Notes:

1. It is recommended to write this register only when the module is idle (MMA = 0 or SMA = 0), or when the module is clock stretching (CSTR =1 or MDR = 1).
2. CNTIF is set on the 9th falling SCL edge when I2CxCNT = 0.

36.5.12 I2CxBTO

Name: I2CxBTO
Address: 0x029C

I2C Bus Timeout Register[1]

Bit	7	6	5	4	3	2	1	0
	TOREC	TOBY32	TOTIME[5:0]					
Access	R/W	R/W	R/W	R/W	R/W	R/W	R/W	R/W
Reset	0	0	0	0	0	0	0	0

Bit 7 – TOREC Timeout Recovery Selection

Value	Description
1	A BTO event will reset the I2C module and set BTOIF.
0	A BTO event will set BTOIF, but will not reset the I2C module.

Bit 6 – TOBY32 Timeout Prescaler Extension Enable[2]

Value	Description
1	BTO time = TOTIME * T_{BTOCLK}
0	BTO time = TOTIME * T_{BTOCLK} * **32**

Bits 5:0 – TOTIME[5:0] Timeout Time Selection

Value	Condition	Description
n	TOBY32 = 1	Timeout is TOTIME periods of the prescaled BTO clock (TOTIME = n * T_{BTOCLK})
n	TOBY32 = 0	Timeout is TOTIME periods of the prescaled BTO clock multiplied by **32** (TOTIME = n * T_{BTOCLK} * **32**)

Notes:

1. It is recommended to write this register only when the module is Idle (MMA = 0 or SMA = 0), or when the module is clock stretching (CSTR = 1 or MDR = 1).
2. When TOBY32 is set (TOBY32 = 1) and the LFINTOSC, MFINTOSC, or SOSC is selected as the BTO clock source, the timeout time (TOTIME) will be approximately in milliseconds.

36.5.13 I2CxBTOC

Name: I2CxBTOC
Address: 0x029F

I2C Bus Timeout Clock Source Selection

Bit	7	6	5	4	3	2	1	0
						BTOC[2:0]		
Access						R/W	R/W	R/W
Reset						0	0	0

Bits 2:0 – BTOC[2:0] Bus Timeout Clock Source Selection

Table 36-5.

BTOC	Selection
111	Reserved
110	Reserved
101	SOSC
100	MFINTOSC (32 kHz)
011	LFINTOSC
010	TMR4_postscaled
001	TMR2_postscaled
000	Reserved

36.5.14 [I2CxADB0]

Name: I2CxADB0
Address: 0x028E

I2C Address Buffer 0 Register[1]

Bit	7	6	5	4	3	2	1	0
	ADB[7:0]							
Access	R/W	R/W	R/W	R/W	R/W	R/W	R/W	R/W
Reset	0	0	0	0	0	0	0	0

Bits 7:0 – ADB[7:0] I2C Address Buffer 0

Condition	Description
7-bit Slave/Multi-Master modes (MODE = *00x or 11x*):	**ADB[7:1]:** Received matching 7-bit slave address **ADB[0]:** Received R/$\overline{W}$ value from 7-bit address
10-bit Slave modes (MODE = *01x*):	**ADB[7:0]:** Received matching lower eight bits of 10-bit slave address
7-bit Master mode (MODE = *100*):	Unused in this mode
10-bit Master mode (MODE = *101*):	**ADB[7:0]:** Eight Least Significant bits of the 10-bit slave address

Note:

1. This register is read-only except in Master 10-bit Address mode (MODE = *101*).

36.5.15 I2CxADB1

Name: I2CxADB1
Address: 0x028F

I2C Address Buffer 1 Register[1]

Bit	7	6	5	4	3	2	1	0
	ADB[7:0]							
Access	R/W	R/W	R/W	R/W	R/W	R/W	R/W	R/W
Reset	0	0	0	0	0	0	0	0

Bits 7:0 – ADB[7:0] I2C Address Buffer 1

Condition	Description
7-bit Slave modes (MODE = 00x):	Unused in this mode
10-bit Slave modes (MODE = 01x):	**ADB[7:1]:** Received matching 10-bit slave address high byte **ADB[0]:** Received R/$\overline{W}$ value from 10-bit high address byte
7-bit Master mode (MODE = 100):	**ADB[7:1]:** 7-bit slave address **ADB[0]:** R/$\overline{W}$ value
10-bit Master mode (MODE = 101):	**ADB[7:1]:** 10-bit slave high address byte **ADB[0]:** R/$\overline{W}$ value
7-bit Multi-Master modes (MODE = 11x):	**ADB[7:1]:** 7-bit slave address **ADB[0]:** R/$\overline{W}$ value

Note:

1. This register is read-only in 7-bit Slave Address modes (MODE = 0xx).

36.5.16 I2CxADR0

Name: I2CxADR0
Address: 0x0290

I2C Address 0 Register

Bit	7	6	5	4	3	2	1	0
	ADR[7:0]							
Access	R/W	R/W	R/W	R/W	R/W	R/W	R/W	R/W
Reset	1	1	1	1	1	1	1	1

Bits 7:0 – ADR[7:0] I2C Slave Address 0

Condition	Description
7-bit Slave/Multi-Master modes (MODE = *00x* or *11x*):	**ADR[7:1]:** 7-bit slave address **ADR[0]:** Unused; bit state is 'don't care'
10-bit Slave modes (MODE = *01x*):	**ADR[7:0]:** Eight Least Significant bits of first 10-bit address

36.5.17 I2CxADR1

Name: I2CxADR1
Address: 0x0291

I2C Address 1 Register

Bit	7	6	5	4	3	2	1	0
	ADR[6:0]							
Access	R/W	R/W	R/W	R/W	R/W	R/W	R/W	
Reset	1	1	1	1	1	1	1	

Bits 7:1 – ADR[6:0] I2C Slave Address 1

Condition	Description
7-bit Slave/Multi-Master modes *(*MODE = *000 or 110)*:	7-bit slave address 1
7-bit Slave/Multi-Master modes with Masking *(*MODE = *011 or 111)*:	7-bit slave address mask for I2CxADR0
10-bit Slave mode *(*MODE = *010)*:	**ADR[7:3]:** Bit pattern (11110) as defined by the I^2C Specification(1) **ADR[2:1]:** Two Most Significant bits of first 10-bit address
10-bit Slave mode with Masking *(*MODE = *011)*:	**ADR[7:3]:** Bit pattern (11110) as defined by the I^2C Specification(1) **ADR[2:1]:** Two Most Significant bits of 10-bit address

Note:

1. The '11110' bit pattern used in the 10-bit address high byte is defined by the I^2C Specification. It is up to the user to define these bits. These bit values are compared to the received address by hardware to determine a match. The bit pattern transmitted by the master must be the same as the slave address's bit pattern used for comparison or a match will not occur.

36.5.18 I2CxADR2

Name: I2CxADR2
Address: 0x0292

I2C Address 2 Register

Bit	7	6	5	4	3	2	1	0
	ADR[7:0]							
Access	R/W	R/W	R/W	R/W	R/W	R/W	R/W	R/W
Reset	1	1	1	1	1	1	1	1

Bits 7:0 – ADR[7:0] I2C Slave Address 2

Condition	Description
7-bit Slave/Multi-Master modes *(*MODE = *000* or *110)*:	**ADR[7:1]:** 7-bit slave address 2 **ADR[0]:** Unused; bit state is 'don't care'
7-bit Slave/Multi-Master modes with Masking *(*MODE = *001* or *111)*:	**ADR[7:1]:** 7-bit slave address **ADR[0]:** Unused; bit state is 'don't care'
10-bit Slave mode *(*MODE = *010)*:	**ADR[7:0]:** Eight Least Significant bits of the second 10-bit address
10-bit Slave mode with Masking *(*MODE = *011)*:	**ADR[7:0]:** Eight Least Significant bits of 10-bit address mask

36.5.19 I2CxADR3

Name: I2CxADR3
Address: 0x0293

I2C Address 3 Register(1)

Bit	7	6	5	4	3	2	1	0
	ADR[6:0]							
Access	R/W	R/W	R/W	R/W	R/W	R/W	R/W	
Reset	1	1	1	1	1	1	1	

Bits 7:1 – ADR[6:0] I2C Slave Address 3

Name	Description
7-bit Slave/Multi-Master modes *(*MODE = *000 or 110)*:	7-bit slave address 3
7-bit Slave/Multi-Master modes with Masking *(*MODE = *001 or 111)*:	7-bit slave address mask for I2CxADR2
10-bit Slave mode *(*MODE = *010)*:	**ADR[7:3]:** Bit pattern (11110) as defined by the I^2C Specification(1) **ADR[2:1]:** Two Most Significant bits of second 10-bit address
10-bit Slave mode with Masking *(*MODE = *011)*:	**ADR[7:3]:** Bit pattern (11110) as defined by the I^2C Specification(1) **ADR[2:1]:** Two Most Significant bits of 10-bit address mask

Note:

1. The '11110' bit pattern used in the 10-bit address high byte is defined by the I^2C Specification. It is up to the user to define these bits. These bit values are compared to the received address by hardware to determine a match. The bit pattern transmitted by the master must be the same as the slave address's bit pattern used for comparison or a match will not occur.

36.5.20 I2CxTXB

Name: I2CxTXB
Address: 0x028B

I2C Transmit Buffer Register[1]

Bit	7	6	5	4	3	2	1	0
	TXB[7:0]							
Access	W	W	W	W	W	W	W	W
Reset	x	x	x	x	x	x	x	x

Bits 7:0 – TXB[7:0] I2C Transmit Buffer

Note: This register is write-only. Reading this register will return a value of 0x00.

36.5.21 I2CxRXB

Name: I2CxRXB
Address: 0x028A

I2C Receive Buffer(1)

Bit	7	6	5	4	3	2	1	0
	RXB[7:0]							
Access	R	R	R	R	R	R	R	R
Reset	x	x	x	x	x	x	x	x

Bits 7:0 – RXB[7:0] I2C Receive Buffer

Note: This register is read-only. Writes to this register are ignored.

36.6 Register Summary - I2C

Address	Name	Bit Pos.	7	6	5	4	3	2	1	0
0x00 ... 0x0289	Reserved									
0x028A	I2C1RXB	7:0	RXB[7:0]							
0x028B	I2C1TXB	7:0	TXB[7:0]							
0x028C	I2C1CNT	7:0	CNT[7:0]							
		15:8	CNT[15:8]							
0x028E	I2C1ADB0	7:0	ADB[7:0]							
0x028F	I2C1ADB1	7:0	ADB[7:0]							
0x0290	I2C1ADR0	7:0	ADR[7:0]							
0x0291	I2C1ADR1	7:0	ADR[6:0]							
0x0292	I2C1ADR2	7:0	ADR[7:0]							
0x0293	I2C1ADR3	7:0	ADR[6:0]							
0x0294	I2C1CON0	7:0	EN	RSEN	S	CSTR	MDR	MODE[2:0]		
0x0295	I2C1CON1	7:0	ACKCNT	ACKDT	ACKSTAT	ACKT	P	RXO	TXU	CSD
0x0296	I2C1CON2	7:0	ACNT	GCEN	FME	ABD	SDAHT[1:0]		BFRET[1:0]	
0x0297	I2C1ERR	7:0		BTOIF	BCLIF	NACKIF		BTOIE	BLCIE	NACKIE
0x0298	I2C1STAT0	7:0	BFRE	SMA	MMA	R	D			
0x0299	I2C1STAT1	7:0	TXWE		TXBE		RXRE	CLRBF		RXBF
0x029A	I2C1PIR	7:0	CNTIF	ACKTIF		WRIF	ADRIF	PCIF	RSCIF	SCIF
0x029B	I2C1PIE	7:0	CNTIE	ACKTIE		WRIE	ADRIE	PCIE	RSCIE	SCIE
0x029C	I2C1BTO	7:0	TOREC	TOBY32	TOTIMF[5:0]					
0x029D	I2C1BAUD	7:0	BAUD[7:0]							
0x029E	I2C1CLK	7:0					CLK[3:0]			
0x029F	I2C1BTOC	7:0						BTOC[2:0]		

37. HLVD - High/Low-Voltage Detect

The HLVD module can be configured to monitor the device voltage. This is useful in battery monitoring applications. Complete control of the HLVD module is provided through the HLVDCON0 and HLVDCON1 registers.

Refer below for a simplified block diagram of the HLVD module.

Figure 37-1. HLVD Module Block Diagram

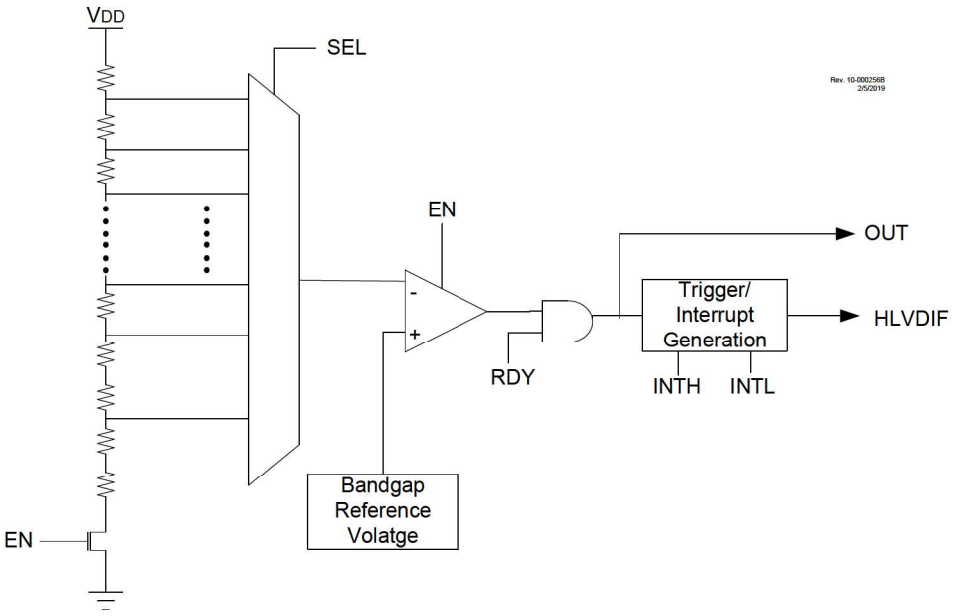

Since the HLVD can be software enabled through the EN bit, setting and clearing the enable bit does not produce a false HLVD event glitch. Each time the HLVD module is enabled, the RDY bit can be used to detect when the module is stable and ready to use.

The INTH and INTL bits determine the overall operation of the module. When INTH is set, the module monitors for rises in V_{DD} above the trip point set by the bits. When INTL is set, the module monitors for drops in V_{DD} below the trip point set by the SEL bits. When both the INTH and INTL bits are set, any changes above or below the trip point set by the SEL bits can be monitored.

The OUT bit can be read to determine if the voltage is greater than or less than the selected trip point.

37.1 Operation

When the HLVD module is enabled, a comparator uses an internally generated voltage reference as the set point. The set point is compared with the trip point, where each node in the resistor divider represents a trip point voltage. The “trip point” voltage is the voltage level at which the device detects a high or low-voltage event, depending on the configuration of the module.

When the supply voltage is equal to the trip point, the voltage tapped off of the resistor array is equal to the internal reference voltage generated by the voltage reference module. The comparator then generates an interrupt signal by setting the HLVDIF bit.

The trip point voltage is software programmable using the SEL bits.

37.2 Setup

To set up the HLVD module:

1. Select the desired HLVD trip point by writing the value to the SEL bits.
2. Depending on the application to detect high-voltage peaks or low-voltage drops or both, set the INTH or INTL bit appropriately.
3. Enable the HLVD module by setting the EN bit.
4. Clear the HLVD interrupt flag (HLVDIF), which may have been set from a previous interrupt.
5. If interrupts are desired, enable the HLVD interrupt by setting the HLVDIE and GIE bits.
   An interrupt will not be generated until the RDY bit is set.

Important: Before changing any module settings (interrupts and tripping point), first disable the module (EN = 0), make the changes and re-enable the module. This prevents the generation of false HLVD events.

37.3 Current Consumption

When the module is enabled, the HLVD comparator and voltage divider are enabled and consume static current. The total current consumption, when enabled, is specified in the **"Electrical Specification"** chapter.

Depending on the application, the HLVD module does not need to operate constantly. To reduce the current consumption, the module can disabled when not in use. Refer to the **"PMD - Peripheral Module Disable"** chapter for more details.

37.4 HLVD Start-up Time

If the HLVD or other circuits using the internal voltage reference are disabled to lower the device's current consumption, the reference voltage circuit will require time to become stable before a low or high-voltage condition can be reliably detected. This start-up time, T_{FVRST}, is an interval that is independent of device clock speed. It is specified in electrical specification section of the device specific data sheet.

The HLVD interrupt flag is not enabled until T_{FVRST} has expired and a stable reference voltage is reached. For this reason, brief excursions beyond the set point may not be detected during this interval (see the figures below).

Figure 37-2. Low-Voltage Detect Operation (INTL = 1)

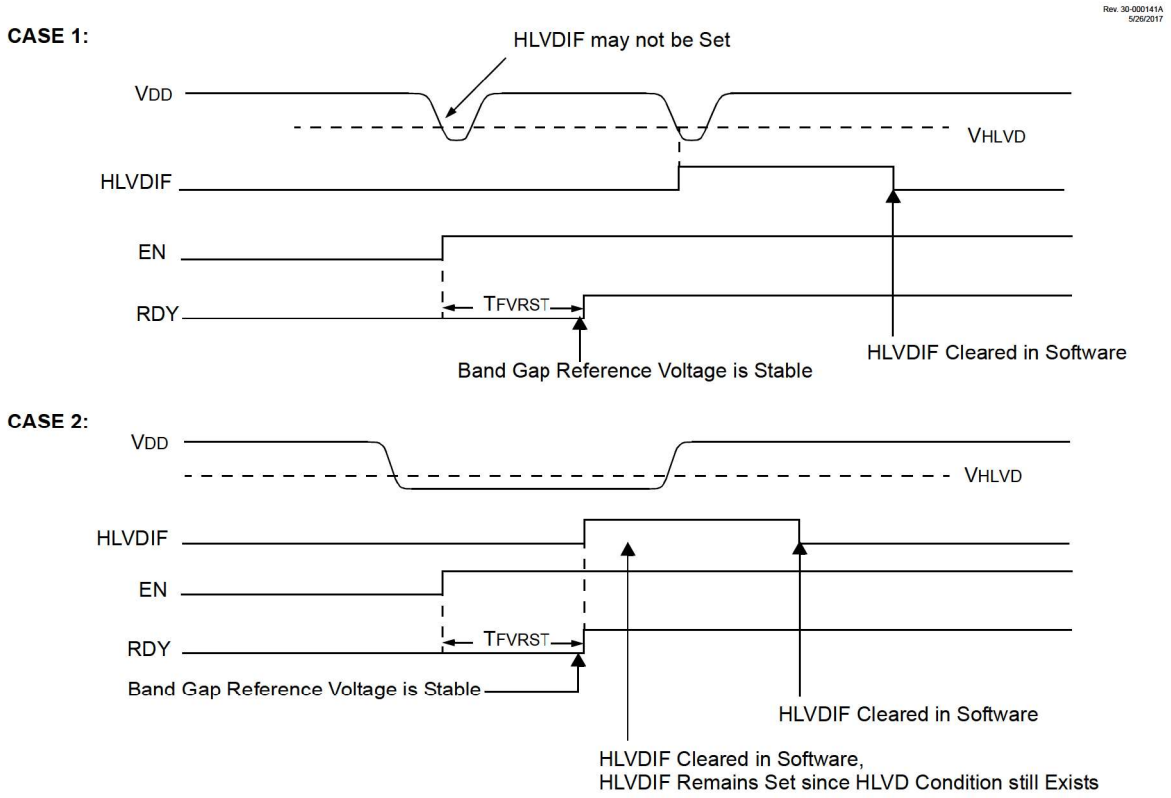

Figure 37-3. High-Voltage Detect Operation (INTH = 1)

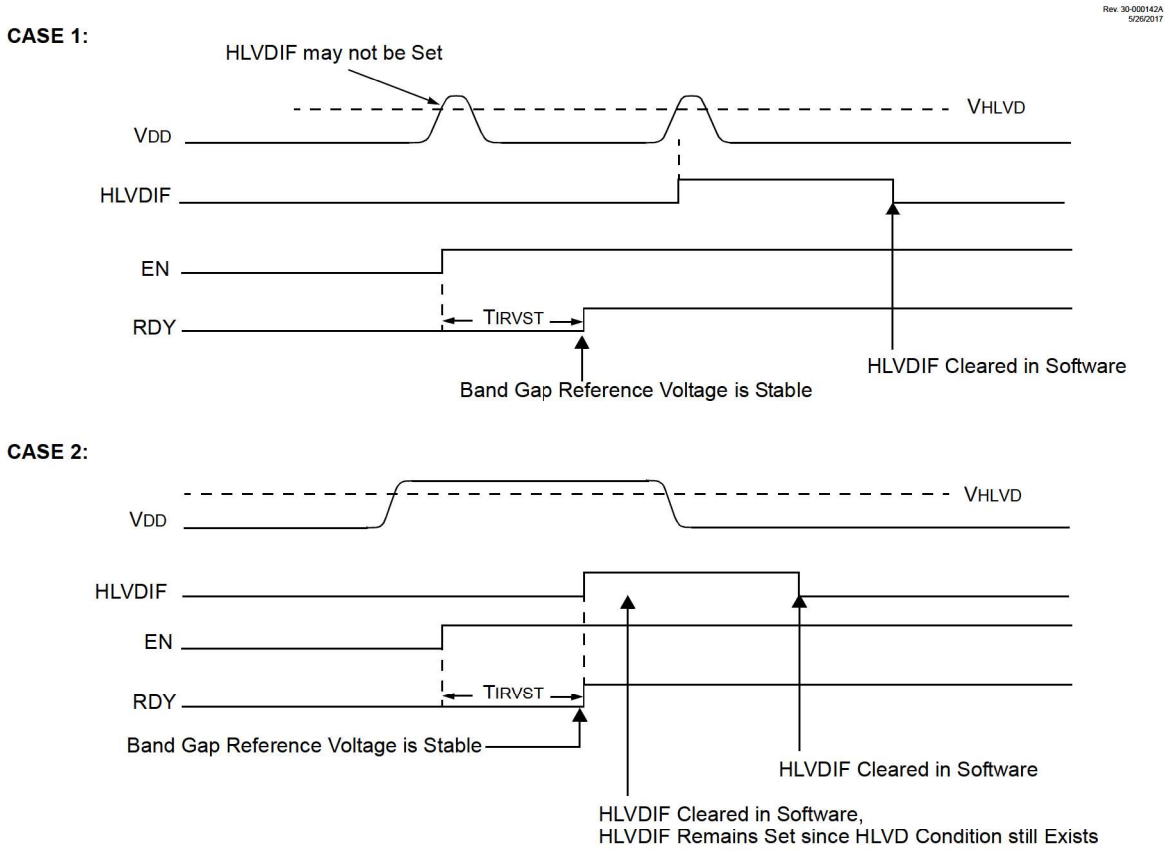

37.5 Applications

In many applications, it is desirable to detect a drop below, or rise above, a particular voltage threshold. For example, the HLVD module could be periodically enabled to detect Universal Serial Bus (USB) attach or detach. This assumes the device is powered by a lower voltage source than the USB when detached. An attach would indicate a High-Voltage Detect from, for example, 3.3V to 5V (the voltage on USB) and vice versa for a detach. This feature could save a design a few extra components and an attach signal (input pin).

For general battery applications, the figure below shows a possible voltage curve. Over time, the device voltage decreases. When the device voltage reaches voltage, V_A, the HLVD logic generates an interrupt at time, T_A. The interrupt could cause the execution of an Interrupt Service Routine (ISR), which would allow the application to perform “housekeeping tasks” and a controlled shutdown before the device voltage exits the valid operating range at T_B. This would give the application a time window, represented by the difference between T_A and T_B, to safely exit.

Figure 37-4. Typical Low-Voltage Detect Application

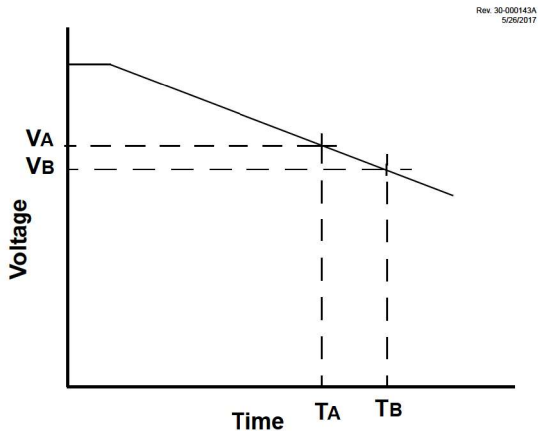

Legend: VA = HLVD trip point
VB = Minimum valid device operatin

37.6 Operation During Sleep

When enabled, the HLVD circuitry continues to operate during Sleep. When the device voltage crosses the trip point, the HLVDIF bit will be set and the device will wake-up from Sleep. If interrupts are enabled, the device will execute code from the interrupt vector. If interrupts are disabled, the device will continue execution from the next instruction after SLEEP.

37.7 Operation During Idle and Doze Modes

The performance of the module is independent of the Idle and Doze modes. The module will generate the events based on the trip points. The response to these events will depend on the Doze and Idle mode settings.

37.8 Effects of a Reset

A device Reset forces all registers to their Reset state. This forces the HLVD module to be turned off. User firmware has to configure the module again.

37.9 Register Definitions: HLVD Control

Long bit name prefixes for the HLVD peripheral is shown in the following table. Refer to the **"Long Bit Names"** section in the **"Register and Bits Naming Conventions"** chapter for more information.

Table 37-1. HLVD Long Bit Name Prefixes

Peripheral	Bit Name Prefix
HLVD	HLVD

37.9.1 HLVDCON0

Name: HLVDCON0
Address: 0x04A

High/Low-Voltage Detect Control Register 0

Bit	7	6	5	4	3	2	1	0
	EN		OUT	RDY			INTH	INTL
Access	R/W		R	R			R/W	R/W
Reset	0		x	x			0	0

Bit 7 – EN High/Low-voltage Detect Power Enable

Value	Description
1	Enables the HLVD module
0	Disables the HLVD module

Bit 5 – OUT HLVD Comparator Output

Value	Description
1	Voltage < selected detection limit (SEL)
0	Voltage > selected detection limit (SEL)

Bit 4 – RDY Band Gap Reference Voltages Stable Status Flag

Value	Description
1	Indicates HLVD Module is ready and output is stable
0	Indicates HLVD Module is not ready

Bit 1 – INTH HLVD Positive going (High Voltage) Interrupt Enable

Value	Description
1	HLVDIF will be set when voltage ≥ selected detection limit (SEL)
0	HLVDIF will not be set

Bit 0 – INTL HLVD Negative going (Low Voltage) Interrupt Enable

Value	Description
1	HLVDIF will be set when voltage ≤ selected detection limit (SEL)
0	HLVDIF will not be set

37.9.2 HLVDCON1

Name: HLVDCON1
Address: 0x04B

Low-Voltage Detect Control Register 1

Bit	7	6	5	4	3	2	1	0
					SEL[3:0]			
Access					R/W	R/W	R/W	R/W
Reset					0	0	0	0

Bits 3:0 – SEL[3:0] High/Low-Voltage Detection Limit Selection

Table 37-2. HLVD Detection Limits

SEL	Detection Limit
1111	Reserved
1110	4.63V
1101	4.32V
1100	4.12V
1011	3.91V
1010	3.71V
1001	3.60V
1000	3.40V
0111	3.09V
0110	2.88V
0101	2.78V
0100	2.57V
0011	2.47V
0010	2.26V
0001	2.06V
0000	1.85V

Reset States: POR/BOR = 0000
All other Resets = uuuu

37.10 Register Summary - HLVD

Address	Name	Bit Pos.	7	6	5	4	3	2	1	0
0x00 ... 0x49	Reserved									
0x4A	HLVDCON0	7:0	EN		OUT	RDY			INTH	INTL
0x4B	HLVDCON1	7:0					SEL[3:0]			

38. FVR - Fixed Voltage Reference

The Fixed Voltage Reference (FVR) is a stable voltage reference, independent of V_{DD}, with 1.024V, 2.048V or 4.096V selectable output levels. The output of the FVR can be configured to supply a reference voltage to analog peripherals such as those listed below.

- ADC input channel
- ADC positive reference
- Comparator input
- Digital-to-Analog Converter (DAC)

The FVR can be enabled by setting the EN bit to '1'.

Note: Fixed Voltage Reference output cannot exceed V_{DD}.

38.1 Independent Gain Amplifiers

The output of the FVR is routed through two independent programmable gain amplifiers. Each amplifier can be programmed for a gain of 1x, 2x or 4x, to produce the three possible voltage levels.

The ADFVR bits are used to enable and configure the gain amplifier settings for the reference supplied to the ADC module. Refer to the **"ADCC - Analog-to-Digital Converter with Computation Module"** chapter for additional information.

The CDAFVR bits are used to enable and configure the gain amplifier settings for the reference supplied to the DAC and comparator modules. Refer to the **"DAC - Digital-to-Analog Converter Module"** and **"CMP - Comparator Module"** chapters for additional information.

Refer to the figure below for block diagram of the FVR module.

Figure 38-1. Fixed Voltage Reference Block Diagram

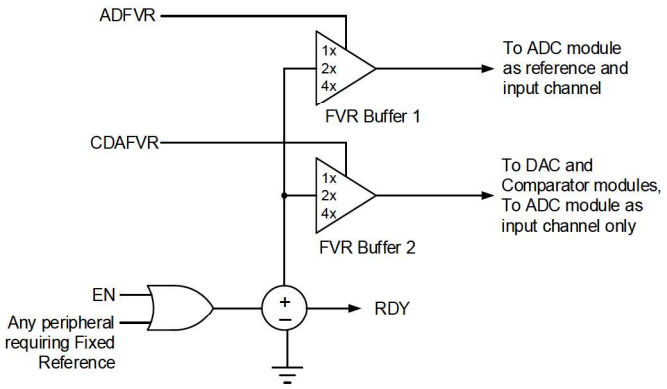

38.2 FVR Stabilization Period

When the Fixed Voltage Reference module is enabled, it requires time for the reference and amplifier circuits to stabilize. Once the circuits stabilize and are ready for use, the RDY bit will be set.

38.3 Register Definitions: FVR

Long bit name prefixes for the FVR peripherals are shown in the following table. Refer to the **"Long Bit Names"** section in the **"Register and Bits Naming Conventions"** chapter for more information.

Table 38-1. FVR Long bit name prefixes

Peripheral	Bit Name Prefix
FVR	FVR

38.3.1 FVRCON

Name: FVRCON
Address: 0x3D7

FVR Control Register

Important: This register is shared between the Fixed Voltage Reference (FVR) module and the Temperature Indicator module.

Bit	7	6	5	4	3	2	1	0
	EN	RDY	TSEN	TSRNG	CDAFVR[1:0]		ADFVR[1:0]	
Access	R/W	R	R/W	R/W	R/W	R/W	R/W	R/W
Reset	0	q	0	0	0	0	0	0

Bit 7 – EN Fixed Voltage Reference Enable

Value	Description
1	Enables module
0	Disables module

Bit 6 – RDY Fixed Voltage Reference Ready Flag

Value	Description
1	Fixed Voltage Reference output is ready for use
0	Fixed Voltage Reference output is not ready for use or not enabled

Bit 5 – TSEN Temperature Indicator Enable

Value	Description
1	Temperature Indicator is enabled
0	Temperature Indicator is disabled

Bit 4 – TSRNG Temperature Indicator Range Selection

Value	Description
1	$V_{OUT} = 3V_T$ (High Range)
0	$V_{OUT} = 2V_T$ (Low Range)

Bits 3:2 – CDAFVR[1:0] FVR Buffer 2 Gain Selection(1)

Value	Description
11	FVR Buffer 2 Gain is 4x, (4.096V)(3)
10	FVR Buffer 2 Gain is 2x, (2.048V)(3)
01	FVR Buffer 2 Gain is 1x, (1.024V)
00	FVR Buffer 2 is OFF

Bits 1:0 – ADFVR[1:0] FVR Buffer 1 Gain Selection(2)

Value	Description
11	FVR Buffer 1 Gain is 4x, (4.096V)(3)
10	FVR Buffer 1 Gain is 2x, (2.048V)(3)
01	FVR Buffer 1 Gain is 1x, (1.024V)
00	FVR Buffer 1 is OFF

Notes:

1. This output goes to the DAC and comparator modules, and to the ADC module as an input channel only.
2. This output goes to the ADC module as a reference and an input channel.
3. Fixed Voltage Reference output cannot exceed V_{DD}.

38.4 Register Summary - FVR

Address	Name	Bit Pos.	7	6	5	4	3	2	1	0
0x00 ... 0x03D6	Reserved									
0x03D7	FVRCON	7:0	EN	RDY	TSEN	TSRNG	CDAFVR[1:0]		ADFVR[1:0]	

39. Temperature Indicator Module

This family of devices is equipped with a temperature circuit designed to measure the operating temperature of the silicon die. The temperature indicator module provides a temperature-dependent voltage that can be measured by the internal Analog-to-Digital Converter.

The circuit's range of operating temperature falls between -40°C and +125°C. The circuit may be used as a temperature threshold detector or a more accurate temperature indicator, depending on the level of calibration performed. A one-point calibration allows the circuit to indicate a temperature closely surrounding that point. A two-point calibration allows the circuit to sense the entire range of temperature more accurately.

39.1 Module Operation

The temperature indicator module consists of a temperature-sensing circuit that provides a voltage to the device ADC. The analog voltage output varies inversely to the device temperature. The output of the temperature indicator is referred to as V_{MEAS}.

The following figure shows a simplified block diagram of the temperature indicator module.

Figure 39-1. Temperature Indicator Module Block Diagram

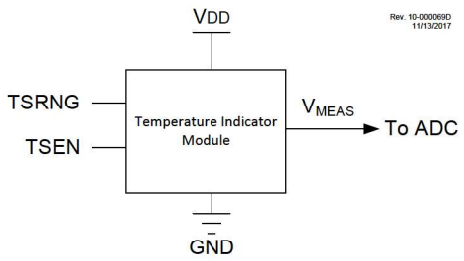

The output of the circuit is measured using the internal Analog-to-Digital Converter. A channel is reserved for the temperature circuit output. Refer to the **"ADCC - Analog-to-Digital Converter with Computation Module"** chapter for more details.

The ON/OFF bit for the module is located in the FVRCON register. The circuit is enabled by setting the TSEN bit. When the module is disabled, the circuit draws no current. Refer to the **"FVR - Fixed Reference Voltage"** chapter for more details.

39.1.1 Temperature Indicator Range

The temperature indicator circuit operates in either high or low range. The high range, selected by setting the TSRNG bit, provides a wider output voltage. This provides more resolution over the temperature range. High range requires a higher bias voltage to operate and thus, a higher V_{DD} is needed. The low range is selected by clearing the TSRNG bit. The low range generates a lower sensor voltage and thus, a lower V_{DD} voltage is needed to operate the circuit.

The output voltage of the sensor is the highest value at -40°C and the lowest value at +125°C.

- **High Range:** The high range is used in applications with the reference for the ADC, V_{REF} = 2.048V. This range may not be suitable for battery-powered applications.
- **Low Range:** This mode is useful in applications in which the V_{DD} is too low for high-range operation. The V_{DD} in this mode can be as low as 1.8V. However, V_{DD} must be at least 0.5V higher than the maximum sensor voltage depending on the expected low operating temperature.

Important: The standard parameters for the Temperature Sensor for both high range and low range are stored in the DIA table. Refer to the DIA table in **"Memory Organization"** chapter for more details.

39.1.2 Minimum Operating V_{DD}

When the temperature circuit is operated in low range, the device may be operated at any operating voltage that is within the device specifications. When the temperature circuit is operated in high range, the device operating voltage, V_{DD}, must be high enough to ensure that the temperature circuit is correctly biased.

The following table shows the recommended minimum V_{DD} vs. Range setting.

Table 39-1. RECOMMENDED V_{DD} vs. RANGE

Min. V_{DD}, TSRNG = 1 (High Range)	Min. V_{DD}, TSRNG = 0 (Low Range)
≥ 2.5	≥ 1.8

39.2 Temperature Calculation

This section describes the steps involved in calculating the die temperature, T_{MEAS}:

1. Obtain the ADC count value of the measured analog voltage: The analog output voltage, V_{MEAS} is converted to a digital count value by the Analog-to-Digital Converter (ADC) and is referred to as ADC_{MEAS}.
2. Obtain the Gain value, from the DIA table. This parameter is TSLR1 for the low range setting or TSHR1 for the high range setting of the temperature indicator module. Refer to the DIA table in the **"Memory Organization"** chapter for more details.
3. Obtain the Offset value, from the DIA table. This parameter is TSLR3 for the low range setting or TSHR3 for the high range setting of the temperature indicator module. Refer to the DIA table in the **"Memory Organization"** chapter for more details.

The following equation provides an estimate for the die temperature based on the above parameters:

Equation 39-1. Sensor Temperature (in °C)

$$T_{MEAS} = \frac{\frac{(ADC_{MEAS} \times Gain)}{256} + Offset}{10}$$

Where:
ADC_{MEAS} = ADC reading at temperature being estimated

Gain = Gain value stored in the DIA table

Offset = Offset Value stored in the DIA table

Note: It is recommended to take the average of ten measurements of ADC_{MEAS} to reduce noise and improve accuracy.

Example 39-1. Temperature Calculation (C)

```
// offset is int16_t data type
// gain is int16_t data type
// ADC_MEAS is uint16_t data type
// Temp_in_C is int24_t data type

ADC_MEAS = ((ADRESH << 8) + ADRESL);        // Store the ADC Result
Temp_in_C = (int24_t)(ADC_MEAS) * gain;     // Multiply the ADC Result by
                                            // Gain and store the result in a
                                            // signed variable
Temp_in_C = Temp_in_C / 256;                // Divide (ADC Result * Gain) by 256
Temp_in_C = Temp_in_C + offset;             // Add (Offset) to the result
Temp_in_C = Temp_in_C / 10;                 // Devide the result by 10 and store
                                            // the calculated temperature
```

39.2.1 Higher-Order Calibration

If the application requires more precise temperature measurement, additional calibrations steps will be necessary. For these applications, two-point or three-point calibration is recommended. For additional information on two-point

calibration method, refer to the following Microchip application note, available at the corporate website (www.microchip.com):

- AN2798, *"Using the PIC16F/PIC18F Ground Referenced Temperature Indicator Module"*

39.3 ADC Acquisition Time

To ensure accurate temperature measurements, the user must wait a certain minimum acquisition time (parameter TS01) after the temperature indicator output is selected as ADC input. This is required for the ADC sampling circuit to settle before the conversion is performed.

Note: Parameter TS01 can be found in the Temperature Indicator Requirements table of the **"Electrical Specifications"** chapter.

39.4 Register Definitions: Temperature Indicator

39.4.1 FVRCON

Name: FVRCON
Address: 0x3D7

FVR Control Register

Important: This register is shared between the Fixed Voltage Reference (FVR) module and the Temperature Indicator module.

Bit	7	6	5	4	3	2	1	0
	EN	RDY	TSEN	TSRNG	CDAFVR[1:0]		ADFVR[1:0]	
Access	R/W	R	R/W	R/W	R/W	R/W	R/W	R/W
Reset	0	q	0	0	0	0	0	0

Bit 7 – EN Fixed Voltage Reference Enable

Value	Description
1	Enables module
0	Disables module

Bit 6 – RDY Fixed Voltage Reference Ready Flag

Value	Description
1	Fixed Voltage Reference output is ready for use
0	Fixed Voltage Reference output is not ready for use or not enabled

Bit 5 – TSEN Temperature Indicator Enable

Value	Description
1	Temperature Indicator is enabled
0	Temperature Indicator is disabled

Bit 4 – TSRNG Temperature Indicator Range Selection

Value	Description
1	$V_{OUT} = 3V_T$ (High Range)
0	$V_{OUT} = 2V_T$ (Low Range)

Bits 3:2 – CDAFVR[1:0] FVR Buffer 2 Gain Selection(1)

Value	Description
11	FVR Buffer 2 Gain is 4x, (4.096V)(3)
10	FVR Buffer 2 Gain is 2x, (2.048V)(3)
01	FVR Buffer 2 Gain is 1x, (1.024V)
00	FVR Buffer 2 is OFF

Bits 1:0 – ADFVR[1:0] FVR Buffer 1 Gain Selection(2)

Value	Description
11	FVR Buffer 1 Gain is 4x, (4.096V)(3)
10	FVR Buffer 1 Gain is 2x, (2.048V)(3)
01	FVR Buffer 1 Gain is 1x, (1.024V)
00	FVR Buffer 1 is OFF

Notes:

1. This output goes to the DAC and comparator modules, and to the ADC module as an input channel only.
2. This output goes to the ADC module as a reference and an input channel.
3. Fixed Voltage Reference output cannot exceed V_{DD}.

39.5 Register Summary - Temperature Indicator

Address	Name	Bit Pos.	7	6	5	4	3	2	1	0
0x00 ... 0x03D6	Reserved									
0x03D7	FVRCON	7:0	EN	RDY	TSEN	TSRNG	CDAFVR[1:0]		ADFVR[1:0]	

40. ADCC - Analog-to-Digital Converter with Computation Module

The Analog-to-Digital Converter with Computation (ADCC) allows conversion of an analog input signal to a 12-bit binary representation of that signal. This device uses analog inputs that are multiplexed into a single Sample-and-Hold circuit. The output of the Sample-and-Hold is connected to the input of the converter. The converter generates a 12-bit binary result via successive approximation and stores the conversion result into the ADC result registers.

Additionally, the following features are provided within the ADC module:

- Acquisition Timer
- Hardware Capacitive Voltage Divider (CVD) support:
  - Precharge timer
  - Adjustable Sample-and-Hold capacitor array
  - Guard ring digital output drive
- Automatic Repeat and Sequencing:
  - Automated double sample conversion for CVD
  - Two sets of Result registers (Current Result and Previous Result)
  - Auto-conversion trigger
  - Internal re-trigger
- Computation Features:
  - Averaging and low-pass filter functions
  - Reference comparison
  - 2-level threshold comparison
  - Selectable interrupts

Figure 40-1 shows the block diagram of the ADC.

The ADC voltage reference is software selectable to be either internally generated or externally supplied.

The ADC can generate an interrupt upon completion of a conversion and upon threshold comparison. These interrupts can be used to wake-up the device from Sleep.

Figure 40-1. ADCC Block Diagram

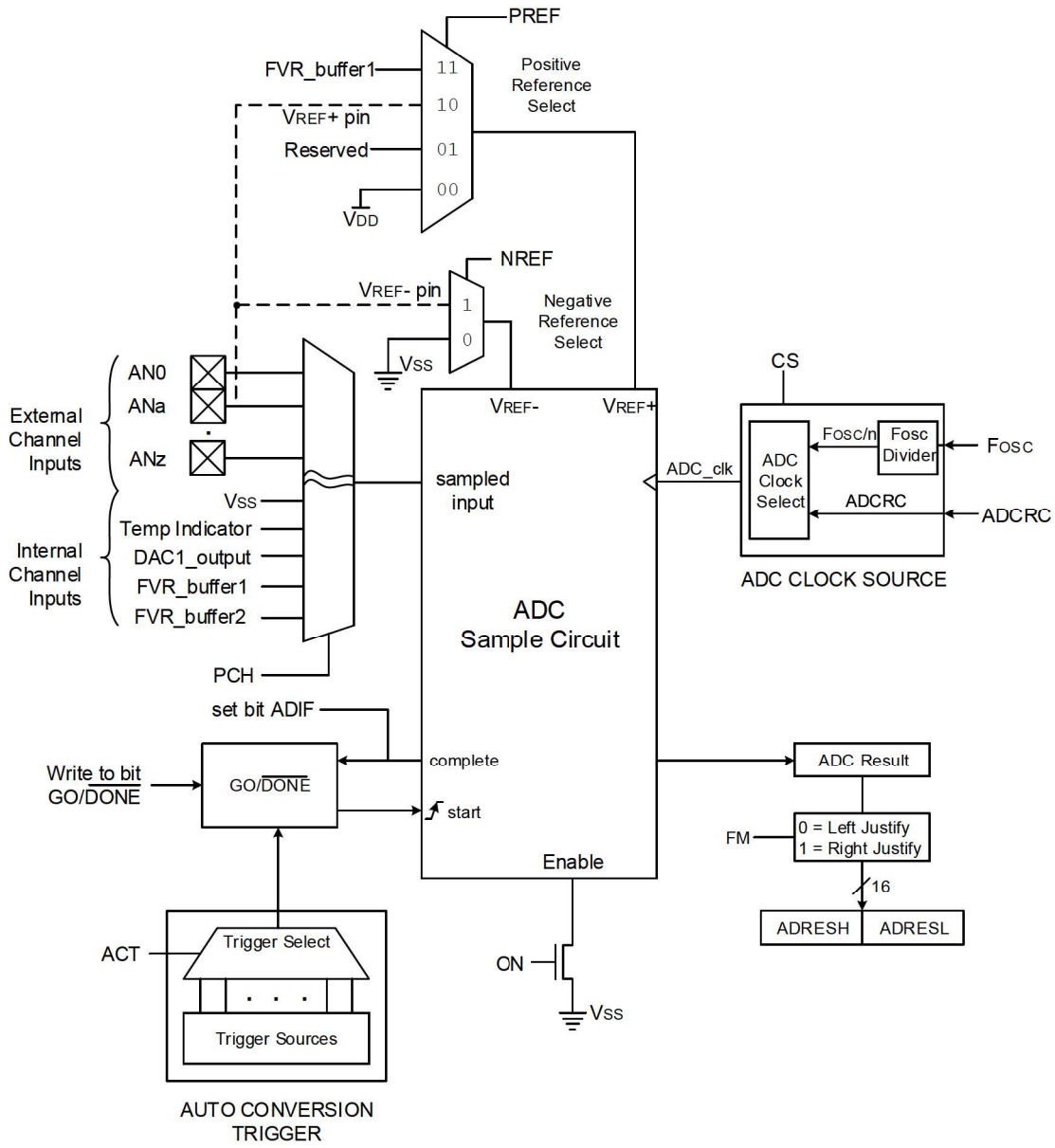

40.1 ADC Configuration

When configuring the ADC the following functions must be considered:

- Port Configuration
- Channel Selection
- ADC Voltage Reference Selection
- ADC Conversion Clock Source
- Interrupt Control
- Result Formatting
- Conversion Trigger Selection

- ADC Acquisition Time
- ADC Precharge Time
- Additional Sample-and-Hold Capacitor
- Single/Double Sample Conversion
- Guard Ring Outputs

40.1.1 Port Configuration

The ADC will convert the voltage level on a pin whether or not the ANSEL bit is set. When converting analog signals, the I/O pin should be configured for analog by setting the associated TRIS and ANSEL bits. Refer to the **"I/O Ports"** chapter for more information.

Important: Analog voltages on any pin that is defined as a digital input may cause the input buffer to conduct excess current.

40.1.2 Channel Selection

The ADPCH register determines which channel is connected to the Sample-and-Hold circuit for conversion. When switching channels, it is recommended to have some acquisition time (ADACQ register) before starting the next conversion. Refer to the ADC Operation section for more information.

Important: To reduce the chance of measurement error, it is recommended to discharge the Sample-and-Hold capacitor when switching between ADC channels by starting a conversion on a channel connected to V_{SS} and terminating the conversion after the acquisition time has elapsed. If the ADC does not have a dedicated V_{SS} input channel, the V_{SS} selection through the DAC output channel can be used. If the DAC is in use, a free input channel can be connected to V_{SS}, and can be used in place of the DAC.

40.1.3 ADC Voltage Reference

The PREF bits provide control of the positive voltage reference. The NREF bit provides control of the negative voltage reference. Refer to the ADREF register for the list of available positive and negative sources.

40.1.4 Conversion Clock

The conversion clock source is selected with the CS bit. When CS = 1 the ADC clock source is an internal fixed-frequency clock referred to as ADCRC. When CS = 0 the ADC clock source is derived from F_{OSC}.

Important: When CS = 0, the clock can be divided using the ADCLK register to meet the ADC clock period requirements.

The time to complete one bit conversion is defined as the T_{AD}. Refer to Figure 40-2 for the complete timing details of the ADC conversion.

For correct conversion, the appropriate T_{AD} specification must be met. Refer to the ADC Timing Specifications table in the **"Electrical Specifications"** chapter for more details. The table below gives examples of appropriate ADC clock selections.

Table 40-1. ADC Clock Period (T_{AD}) Vs. Device Operating Frequencies(1,3)

ADC Clock Source	ADCLK	ADC Clock Period (T_{AD}) for Different Device Frequency (F_{OSC})						
		64 MHz	32 MHz	20 MHz	16 MHz	8 MHz	4 MHz	1 MHz
$F_{OSC}/2$	'b000000	31.25 ns(2)	62.5 ns(2)	100 ns(2)	125 ns(2)	250 ns(2)	500 ns	2.0 µs

.....continued

ADC Clock Source	ADCLK	ADC Clock Period (T_{AD}) for Different Device Frequency (F_{OSC})						
		64 MHz	32 MHz	20 MHz	16 MHz	8 MHz	4 MHz	1 MHz
F_{OSC}/4	'b000001	62.5 ns(2)	125 ns(2)	200 ns(2)	250 ns(2)	500 ns	1.0 µs	4.0 µs
F_{OSC}/6	'b000010	93.75 ns(2)	187.5 ns(2)	300 ns(2)	375 ns(2)	750 ns	1.5 µs	6.0 µs
F_{OSC}/8	'b000011	125 ns(2)	250 ns(2)	400 ns(2)	500 ns	1.0 µs	2.0 µs	8.0 µs
...	...	...	...	...	...	...	...	...
F_{OSC}/16	'b000111	250 ns(2)	500 ns	800 ns	1.0 µs	2.0 µs	4.0 µs	16.0 µs(2)
...	...	...	...	...	...	...	...	...
F_{OSC}/32	'b001111	500 ns	1.0 µs	1.6 µs	2.0 µs	4.0 µs	8.0 µs	32.0 µs(2)
...	...	...	...	...	...	...	...	...
F_{OSC}/64	'b0111111	1.0 µs	2.0 µs	3.2 µs	4.0 µs	8.0 µs	16.0 µs(3)	64.0 µs(2)
...	...	...	...	...	...	...	...	...
F_{OSC}/128	'b111111	2.0 µs	4.0 µs	6.4 µs	8.0 µs	16.0 µs(2)	32.0 µs(2)	128.0 µs(2)
ADCRC	CS=1	1.0-6.0 µs	1.0-6.0 µs	1.0-6.0 µs	1.0-6.0 µs	1.0-6.0 µs	1.0-6.0 µs	1.0-6.0 µs

Notes:

1. Refer to the **"Electrical Specifications"** chapter to see the T_{AD} parameter for the ADCRC source typical T_{AD} value.
2. These values violate the required T_{AD} time.
3. The ADC clock period (T_{AD}) and total ADC conversion time can be minimized when the ADC clock is derived from the system clock F_{OSC}. However, the ADCRC oscillator source must be used when conversions are to be performed with the device in Sleep mode.

Important:

- Except for the ADCRC clock source, any changes in the system clock frequency will change the ADC clock frequency, which may adversely affect the ADC result.
- The internal control logic of the ADC runs off of the clock selected by the CS bit. When the CS bit is set to '1' (ADC runs on ADCRC), there may be unexpected delays in operation when setting the ADC control bits.

Figure 40-2. Analog-to-Digital Conversion Cycles

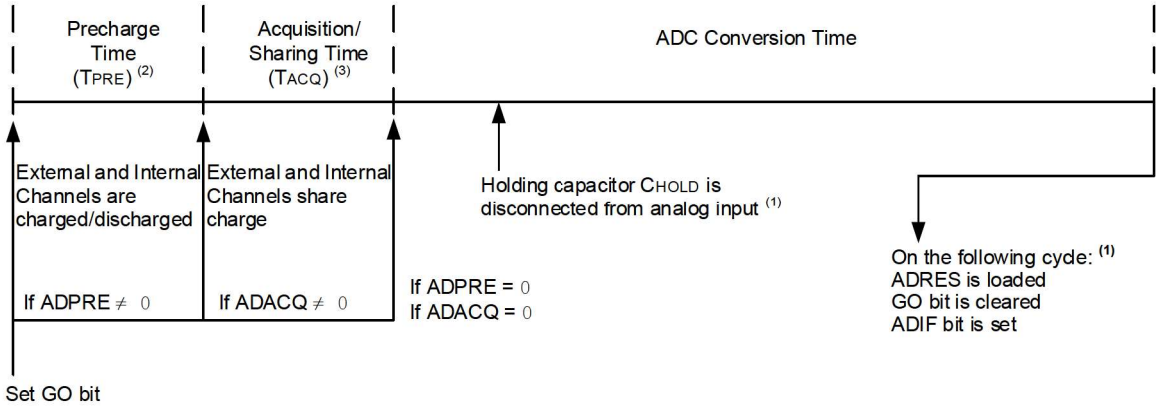

Note:
1. Refer to the ADC Conversion Timing Specifications table in the **"Electrical Specifications"** chapter.
2. Refer to ADPRE register for more details.
3. Refer to ADACQ register for more details.

40.1.5 Interrupts

The ADC module allows for the ability to generate an interrupt upon completion of an Analog-to-Digital Conversion. The ADC Interrupt Flag is the ADIF bit in the PIRx register. The ADC Interrupt Enable is the ADIE bit in the PIEx register. The ADIF bit must be cleared by software.

Important:
1. The ADIF bit is set at the completion of every conversion, regardless of whether or not the ADC interrupt is enabled.
2. The ADC operates during Sleep only when the ADCRC oscillator is selected.

While the device is operating in Sleep:

- If ADIE = 1 and GIE = 0 : An interrupt will wake-up the device from Sleep. Upon waking from Sleep, the instructions following the SLEEP instruction is executed. Interrupt Service Routine is not executed.
- If ADIE = 1 and GIE = 1 : An interrupt will wake-up the device from Sleep. Upon waking from Sleep, the instruction following the SLEEP instruction is always executed. Then the execution will switch to the Interrupt Service Routine.

40.1.6 Result Formatting

The ADC conversion result can be supplied in two formats, left justified or right justified. The FM bit controls the output format as shown in Figure 40-3.

Figure 40-3. 12-Bit ADC Conversion Result Format

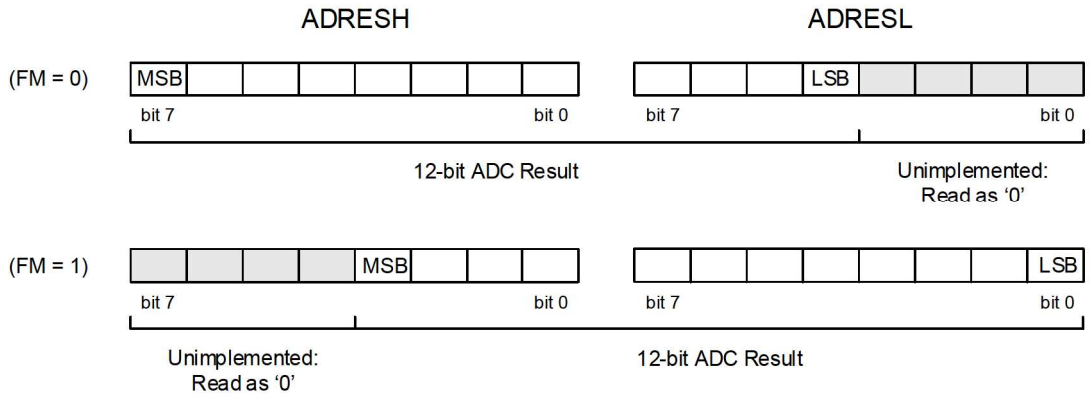

Important: Writes to the ADRES register pair are always right justified regardless of the selected format mode. Therefore, a data read after writing to ADRES when FM = 0 will be shifted left four places.

40.2 ADC Operation

40.2.1 Starting a Conversion

To enable the ADC module, the ON bit must be set to '1'. A conversion may be started by any of the following:

- Software setting the GO bit to '1'
- An external trigger (source selected by ADACT)
- A continuous-mode retrigger (see the Continuous Sampling Mode section for more details)

Important: The GO bit should not be set in the same instruction that turns on the ADC. Refer to the ADC Conversion Procedure (Basic Mode) section for more details.

40.2.2 Completion of a Conversion

When any individual conversion is complete, the existing value in ADRES is written into ADPREV (if PSIS = 0) and the new conversion results appear in ADRES. When the conversion completes, the ADC module will:

- Clear the GO bit (unless the CONT bit is set)
- Set the ADIF Interrupt Flag bit
- Set the MATH bit
- Update ADACC

After every conversion when DSEN = 0, or after every other conversion when DSEN = 1, the following events occur:

- ADERR is calculated
- ADTIF interrupt is set if ADERR calculation meets threshold comparison

40.2.3 ADC Operation During Sleep

The ADC module can operate during Sleep. This requires the ADC clock source to be set to the ADCRC option. When the ADCRC oscillator source is selected, the ADC waits one additional instruction before starting the

conversion. This allows the SLEEP instruction to be executed, which can reduce system noise during the conversion. If the ADC interrupt is enabled, the device will wake-up from Sleep when the conversion completes. If the ADC interrupt is disabled, the device remains in Sleep and the ADC module is turned off after the conversion completes, although the ON bit remains set.

40.2.4 External Trigger During Sleep

If the external trigger is received during Sleep while the ADC clock source is set to the ADCRC, the ADC module will perform the conversion and set the ADIF bit upon completion.

If an external trigger is received when the ADC clock source is something other than ADCRC, the trigger will be recorded, but the conversion will not begin until the device exits Sleep.

40.2.5 Auto-Conversion Trigger

The auto-conversion trigger allows periodic ADC measurements without software intervention. When a rising edge of the selected source occurs, the GO bit is set by hardware.

The auto-conversion trigger source is selected with the ACT bits.

Using the auto-conversion trigger does not ensure proper ADC timing. It is the user's responsibility to ensure that the ADC timing requirements are met.

40.2.6 ADC Conversion Procedure (Basic Mode)

This is an example procedure for using the ADC to perform an Analog-to-Digital Conversion:

1. Configure Port:
   - Disable pin output driver (Refer to the TRISx register).
   - Configure pin as analog (Refer to the ANSELx register)
2. Configure the ADC module:
   - Select ADC conversion clock.
   - Configure voltage reference.
   - Select ADC input channel.
   - Configure precharge (ADPRE) and acquisition (ADACQ) time period.
   - Turn on ADC module.
3. Configure ADC interrupt (optional):
   - Clear ADC interrupt flag.
   - Enable ADC interrupt.
   - Enable global interrupt (GIE bit)(1).
4. If ADACQ = 0, software must wait the required acquisition time(2).
5. Start conversion by setting the GO bit.
6. Wait for ADC conversion to complete by one of the following:
   - Polling the GO bit
   - Waiting for the ADC interrupt (if interrupt is enabled)
7. Read ADC Result.
8. Clear the ADC interrupt flag (if interrupt is enabled).

Notes:

1. With global interrupts disabled (GIE = 0), the device will wake from Sleep but will not enter an Interrupt Service Routine.
2. Refer to the ADC Acquisition Requirements section for more details.

Example 40-1. ADC Conversion (assembly)

```
; This code block configures the ADC for polling, Vdd and Vss references,
; ADCRC oscillator, and AN0 input.
; Conversion start & polling for completion are included.

    BANKSEL ADCON1      ;
    clrf    ADCON1      ;
```

```
    clrf    ADCON2      ; Legacy mode, no filtering, ADRES->ADPREV
    clrf    ADCON3      ; no math functions
    clrf    ADREF       ; Vref = Vdd & Vss
    clrf    ADPCH       ; select RA0/AN0
    clrf    ADACQ       ; software controlled acquisition time
    clrf    ADCAP       ; default S&H capacitance
    clrf    ADRPT       ; no repeat measurements
    clrf    ADACT       ; auto-conversion disabled
    movlw   B'10010100' ; ADC On, right-justified, ADCRC clock
    movwf   ADCON0
    BANKSEL TRISA       ;
    bsf     TRISA,0     ; Set RA0 to input
    BANKSEL ANSEL       ;
    bsf     ANSEL,0     ; Set RA0 to analog
    call    SampleTime  ; Acquisiton delay
    BANKSEL ADCON0
    bsf     ADCON0,GO   ; Start conversion
    btfsc   ADCON0,GO   ; Is conversion done?
    goto    $-2         ; No, test again
    BANKSEL ADRESH      ;
    movf    ADRESH,W    ; Read upper byte
    movwf   RESULTH1    ; store in GPR space
    movf    ADRESL,W    ; Read lower byte
    movwf   RESULTLO    ; Store in GPR space
```

Example 40-2. ADC Conversion (C)

```
/*This code block configures the ADC
for polling, VDD and VSS references,
ADCRC oscillator and AN0 input.
Conversion start & polling for completion
are included.
  */
    void main() {
        //System Initialize
        initializeSystem();

        //Setup ADC
        ADCON0bits.FM = 1;       //right justify
        ADCON0bits.CS = 1;       //ADCRC Clock
        ADPCH = 0x00;            //RA0 is Analog channel
        TRISAbits.TRISA0 = 1;    //Set RA0 to input
        ANSELAbits.ANSELA0 = 1; //Set RA0 to analog
        ADACQ = 32;              //Set acquisition time
        ADCON0bits.ON = 1;       //Turn ADC On

    while (1) {
        ADCON0bits.GO = 1;      //Start conversion
        while (ADCON0bits.GO); //Wait for conversion done
        resultHigh = ADRESH;    //Read result
        resultLow = ADRESL;     //Read result
    }
 }
```

40.3 ADC Acquisition Requirements

For the ADC to meet its specified accuracy, the charge holding capacitor (C_{HOLD}) must be allowed to fully charge to the input channel voltage level. The analog input model is shown in Figure 40-4. The source impedance (R_S) and the internal sampling switch (R_{SS}) impedance directly affect the time required to charge the capacitor C_{HOLD}. The sampling switch (R_{SS}) impedance varies over the device voltage (V_{DD}). The maximum recommended impedance for analog sources is 10 kΩ. As the source impedance is decreased, the acquisition time may be decreased. After the analog input channel is selected (or changed), an ADC acquisition time must be completed before the conversion can be started. To calculate the minimum acquisition time, Equation 40-1 may be used. This equation assumes an error of 1/2 LSb. The 1/2 LSb error is the maximum error allowed for the ADC to meet its specified resolution.

Equation 40-1. Acquisition Time Example

Assumptions: Temperature = 50°C; External impedance = 10kΩ; V_{DD} = 5.0V

T_{ACQ} = Amplifier Settling Time + Hold Capacitor Charging Time + Temperature Coefficient

$$T_{ACQ} = T_{AMP} + T_C + T_{COFF}$$

$$T_{ACQ} = 2\mu s + T_C + \left[\left(Temperature - 25°C\right)\left(0.05\mu s/°C\right)\right]$$

The value for T_C can be approximated with the following equations:

$$V_{APPLIED}\left(1 - \frac{1}{\left(2^{n+1}\right) - 1}\right) = V_{CHOLD}$$; [1] V_{CHOLD} charged to within ½ lsb

$$V_{APPLIED}\left(1 - e^{\frac{-T_C}{RC}}\right) = V_{CHOLD}$$; [2] V_{CHOLD} charge response to $V_{APPLIED}$

$$V_{APPLIED}\left(1 - e^{\frac{-T_C}{RC}}\right) = V_{APPLIED}\left(1 - \frac{1}{\left(2^{n+1}\right) - 1}\right)$$; Combining [1] and [2]

Note: Where n = ADC resolution in bits

Solving for T_C:

$$T_C = -C_{HOLD}\left(R_{IC} + R_{SS} + R_S\right) ln\left(1/8191\right)$$

$$T_C = -28pF\left(1k\Omega + 7k\Omega + 10k\Omega\right) ln\left(0.0001221\right)$$

$$T_C = 4.54\mu s$$

Therefore:

$$T_{ACQ} = 2\mu s + 4.54\mu s + \left[\left(50°C - 25°C\right)\left(0.05\mu s/°C\right)\right]$$

$$T_{ACQ} = 7.79\ \mu s$$

Important:

- The reference voltage (V_{REF}) has no effect on the equation, since it cancels itself out.
- The charge holding capacitor (C_{HOLD}) is not discharged after each conversion.
- The maximum recommended impedance for analog sources is 10 kΩ. This is required to meet the pin leakage specification.

Figure 40-4. Analog Input Model

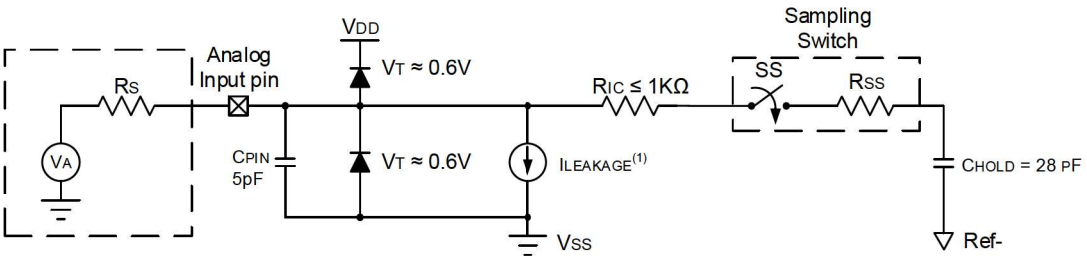

Legend: CPIN = Input Capacitance
ILEAKAGE = Leakage Current at the pin due to various junctions
RIC = Interconnect Resistance
RS = Source Impedance
VA = Analog Voltage
VT = Diode Forward Voltage
SS = Sampling Switch
RSS = Resistance of the Sampling Switch
CHOLD = Sample/Hold Capacitance

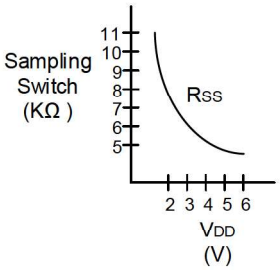

Note:
1. Refer to the **"Electrical Specifications"** chapter.

Figure 40-5. ADC Transfer Function

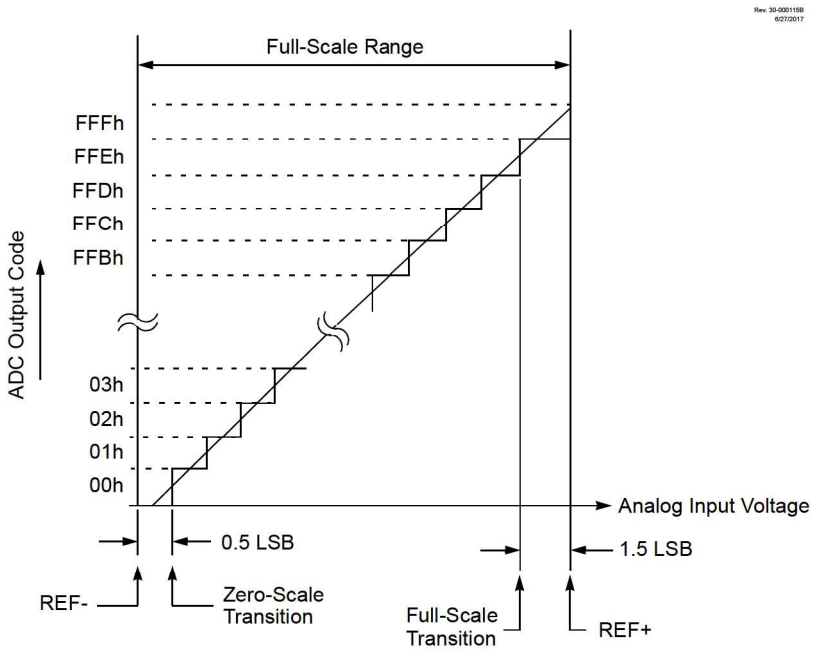

40.4 ADC Charge Pump

The ADC module has a dedicated charge pump which can be controlled through the ADCP register. The primary purpose of the charge pump is to supply a constant voltage to the gates of transistor devices in the Analog-to-Digital Converter, signal and reference input pass-gates, to prevent degradation of transistor performance at low operating voltage.

The charge pump can be enabled by setting the CPON bit. Once enabled, the pump will undergo a start-up time to stabilize the charge pump output. Once the output stabilizes and is ready for use, the CPRDY bit will be set.

40.5 Computation Operation

The ADC module hardware is equipped with post-conversion computation features. These features provide post-processing functions such as digital filtering/averaging and threshold comparison. Based on computation results, the module can be configured to take additional samples or stop conversions, and an interrupt may be asserted.

Figure 40-6. Computational Features Simplified Block Diagram

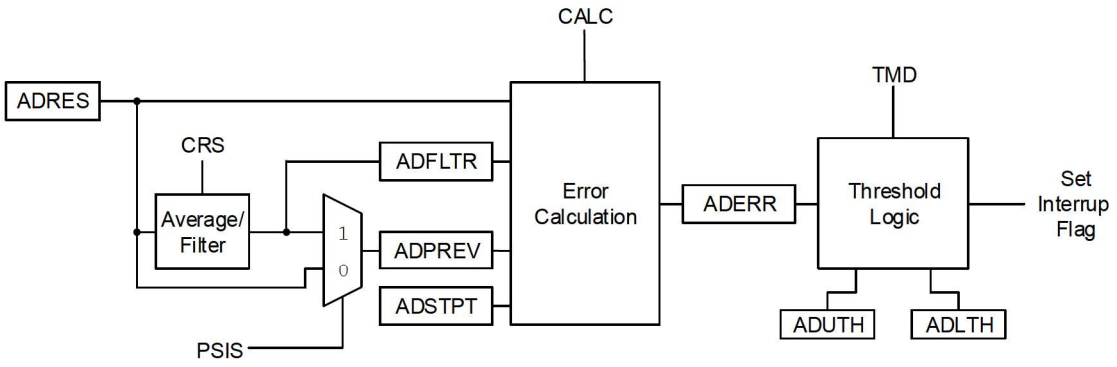

The operation of the ADC computational features is controlled by the MD bits.

The module can be operated in one of five modes:

- Basic: This is a legacy mode. In this mode, ADC conversion occurs on single (DSEN = 0) or double (DSEN = 1) samples. ADIF is set after each conversion is complete. ADTIF is set according to the calculation mode.
- Accumulate: With each trigger, the ADC conversion result is added to the accumulator and CNT increments. ADIF is set after each conversion. ADTIF is set according to the calculation mode.
- Average: With each trigger, the ADC conversion result is added to the accumulator. When the RPT number of samples have been accumulated, a threshold test is performed. Upon the next trigger, the accumulator is cleared. For the subsequent tests, additional ADRPT samples are required to be accumulated.
- Burst Average: At the trigger, the accumulator is cleared. The ADC conversion results are then collected repetitively until ADRPT samples are accumulated and finally the threshold is tested.
- Low-Pass Filter (LPF): With each trigger, the ADC conversion result is sent through a filter. When ADRPT samples have occurred, a threshold test is performed. Every trigger after that the ADC conversion result is sent through the filter and another threshold test is performed.

The five modes are summarized in the following table.

Table 40-2. Computation Modes

Mode	MD	Register Clear Event	Value after Cycle(1) Completion		Threshold Operations			Value at ADTIF Interrupt		
		ADACC and CNT	ADACC	ADCNT	Retrigger	Threshold Test	Interrupt	AOV	ADFLTR	ADCNT
Basic	0	ACLR = 1	Unchanged	Unchanged	No	Every Sample	If threshold = true	N/A	N/A	count
Accumulate	1	ACLR = 1	S1 + ADACC or (S2 - S1) + ADACC	If (ADCNT = 0xFF): ADCNT, otherwise: ADCNT +1	No	Every Sample	If threshold = true	ADACC Overflow	ADACC/2^{CRS}	count
Average	2	ACLR = 1 or ADCNT ≥ ADRPT at GO set or retrigger	S1 + ADACC or (S2 -S1) + ADACC	If (ADCNT = 0xFF): ADCNT, otherwise: ADCNT + 1	No	If ADCNT ≥ ADRPT	If threshold = true	ADACC Overflow	ADACC/2^{CRS}	count
Burst Average	3	ACLR = 1 or at GO set or retrigger	Each repetition: same as Average End with sum of all samples	Each repetition: same as Average End with ADCNT = ADRPT	Repeat while ADCNT < ADRPT	If ADCNT ≥ ADRPT	If threshold = true	ADACC Overflow	ADACC/2^{CRS}	ADRPT
Low-pass Filter	4	ACLR = 1	S1 + ADACC-ADACC/ 2^{CRS} or (S2 - S1) + ADACC-ADACC/ 2^{CRS}	If (ADCNT = 0xFF): ADCNT, otherwise: ADCNT + 1	No	If ADCNT ≥ ADRPT	If threshold = true	ADACC Overflow	ADACC/2^{CRS} (Filtered Value)	count

Notes:

1. When DSEN = 0 then Cycle means one conversion. When DSEN = 1 then Cycle means two conversions.
2. S1 and S2 are abbreviations for Sample 1 and Sample 2, respectively. When DSEN = 0, S1 = ADRES; When DSEN = 1, S1 = ADPREV and S2 = ADRES.

© 2020 Microchip Technology Inc.

40.5.1 Digital Filter/Average

The digital filter/average module consists of an accumulator with data feedback options, and control logic to determine when threshold tests need to be applied. The accumulator can be accessed through the ADACC register.

Upon each trigger event (the GO bit set or external event trigger), the ADC conversion result is added to or subtracted from the accumulator. If the accumulated value exceeds $2^{(accumulator_width)}-1 = 2^{18}-1 = 262143$, the AOV overflow bit is set.

The number of samples to be accumulated is determined by the ADRPT (ADC Repeat Setting) register. Each time a sample is added to the accumulator, the ADCNT register is incremented. Once ADRPT samples are accumulated (ADCNT = ADRPT), the accumulator may be cleared automatically depending on ADC operation mode. An accumulator clear command can be issued in software by setting the ACLR bit. Setting the ACLR bit will also clear the AOV (Accumulator overflow) bit, as well as the ADCNT register. The ACLR bit is cleared by the hardware when accumulator clearing action is complete.

Important: When ADC is operating from ADCRC, up to five ADCRC clock cycles are required to execute the ADACC clearing operation.

The CRS bits control the data shift on the accumulator result, which effectively divides the value in the accumulator registers. For the Accumulate mode of the digital filter, the shift provides a simple scaling operation. For the Average/ Burst Average mode, the calculated average is only accurate when the number of samples agrees with the number of bits shifted. For the Low-Pass Filter mode, the shift is an integral part of the filter, and determines the cutoff frequency of the filter. Table 40-3 shows the -3 dB cutoff frequency in ωT (radians) and the highest signal attenuation obtained by this filter at Nyquist frequency (ωT = π).

Table 40-3. Low-pass Filter -3 dB Cutoff Frequency

CRS	ωT (radians) @ -3 dB Frequency	dB @ $F_{Nyquist}$=1/(2T)
1	0.72	-9.5
2	0.284	-16.9
3	0.134	-23.5
4	0.065	-29.8
5	0.032	-36.0
6	0.016	-42.0

40.5.2 Basic Mode

Basic mode (MD = 'b000) disables all additional computation features. In this mode, no accumulation occurs but threshold error comparison is performed. Double sampling, Continuous mode, and all CVD features are still available, but no digital filter/average calculations are performed.

40.5.3 Accumulate Mode

In Accumulate mode (MD = 'b001), after every conversion, the ADC result is added to the ADACC register. The ADACC register is right-shifted by the value of the CRS bits. This right-shifted value is copied in to the ADFLTR register. The Formatting mode does not affect the right-justification of the ADACC or ADFLTR values. Upon each sample, ADCNT is incremented, counting the number of samples accumulated. After each sample and accumulation, the ADFLTR value has a threshold comparison performed on it (see Threshold Comparison section) and the ADTIF interrupt may trigger.

40.5.4 Average Mode

In Average mode (MD = 'b010), the ADACC registers accumulate with each ADC sample, much as in Accumulate mode, and the ADCNT register increments with each sample. The ADFLTR register is also updated with the right-shifted value of the ADACC register. The value of the CRS bits governs the number of right shifts. However, in Average mode, the threshold comparison is performed upon ADCNT being greater than or equal to a user-defined

ADRPT value. In this mode when ADRPT = 2^CRS, then the final accumulated value will be divided by the number of samples, allowing for a threshold comparison operation on the average of all gathered samples.

40.5.5 Burst Average Mode

The Burst Average mode (MD = 'b011) acts the same as the Average mode in most respects. The one way it differs is that it continuously retriggers ADC sampling until the CNT value is equal to ADRPT, even if Continuous Sampling mode (see Continuous Sampling Mode section) is not enabled. This provides a threshold comparison on the average of a short burst of ADC samples.

40.5.6 Low-Pass Filter Mode

The Low-Pass Filter mode (MD = 'b100) acts similarly to the Average mode in how it handles samples (accumulates samples until the ADCNT value is greater than or equal to RPT, then triggers a threshold comparison), but instead of a simple average, it performs a low-pass filter operation on all of the samples, reducing the effect of high-frequency noise on the total, then performs a threshold comparison on the results. In this mode, the CRS bits determine the cutoff frequency of the low-pass filter (as demonstrated by Digital Filter/Average). Refer to the Computation Operation section for a more detailed description of the mathematical operation.

For more information about Low-Pass Filter mode, refer to the following Microchip application note, available in the corporate website (www.microchip.com):

- AN2749, *"PIC18 12-bit ADCC in Low-Pass Filter Mode"*

40.5.7 Threshold Comparison

At the end of each computation:

- The conversion results are captured at the end-of-conversion.
- The error (ADERR) is calculated based on a difference calculation which is selected by the CALC bits. The value can be one of the following calculations:
  - The first derivative of single measurements
  - The CVD result when double sampling is enabled
  - The current result vs. setpoint value in the ADSTPT register
  - The current result vs. the filtered/average result
  - The first derivative of the filtered/average value
  - Filtered/average value vs. setpoint value in the ADSTPT register
- The result of the calculation (ADERR) is compared to the upper and lower thresholds, ADUTH and ADLTH registers, to set the UTHR and LTHR flag bits. The threshold logic is selected by the TMD bits. The threshold trigger option can be one of the following:
  - Never interrupt
  - Error is less than lower threshold
  - Error is greater than or equal to lower threshold
  - Error is between thresholds (inclusive)
  - Error is outside of thresholds
  - Error is less than or equal to upper threshold
  - Error is greater than upper threshold
  - Always interrupt regardless of threshold test results
  - If the threshold condition is met, the threshold interrupt flag ADTIF is set.

Important:

- The threshold tests are signed operations.
- If the AOV bit is set, a threshold interrupt is signaled. It is good practice for threshold interrupt handlers to verify the validity of the threshold by checking AOV bit.

40.5.8 Repetition and Sampling Options

40.5.8.1 Continuous Sampling Mode

Setting the CONT bit automatically retriggers a new conversion cycle after updating the ADACC register. That means the GO bit remains set to generate automatic retriggering. If SOI = 1, a threshold interrupt condition will clear GO bit and the conversion will stop.

40.5.8.2 Double Sample Conversion

Double sampling is enabled by setting the DSEN bit. When this bit is set, two conversions are required before the module calculates the threshold error. Each conversion must be triggered separately when CONT = 0 but will repeat automatically form a single trigger when CONT = 1. The first conversion will set the MATH bit and update ADACC, but will not calculate ADERR or trigger ADTIF. When the second conversion completes, the first value is transferred to ADPREV (depending on the setting of PSIS) and the value of the second conversion is placed into ADRES. Only upon the completion of the second conversion is ADERR calculated and ADTIF triggered (depending on the value of CALC).

40.6 Capacitive Voltage Divider (CVD) Features

The ADC module contains several features that allow the user to perform a relative capacitance measurement on any ADC channel using the internal ADC Sample-and-Hold capacitance as a reference. This relative capacitance measurement can be used to implement capacitive touch or proximity sensing applications. The following figure shows the basic block diagram of the CVD portion of the ADC module.

Figure 40-7. Hardware Capacitive Voltage Divider Block Diagram

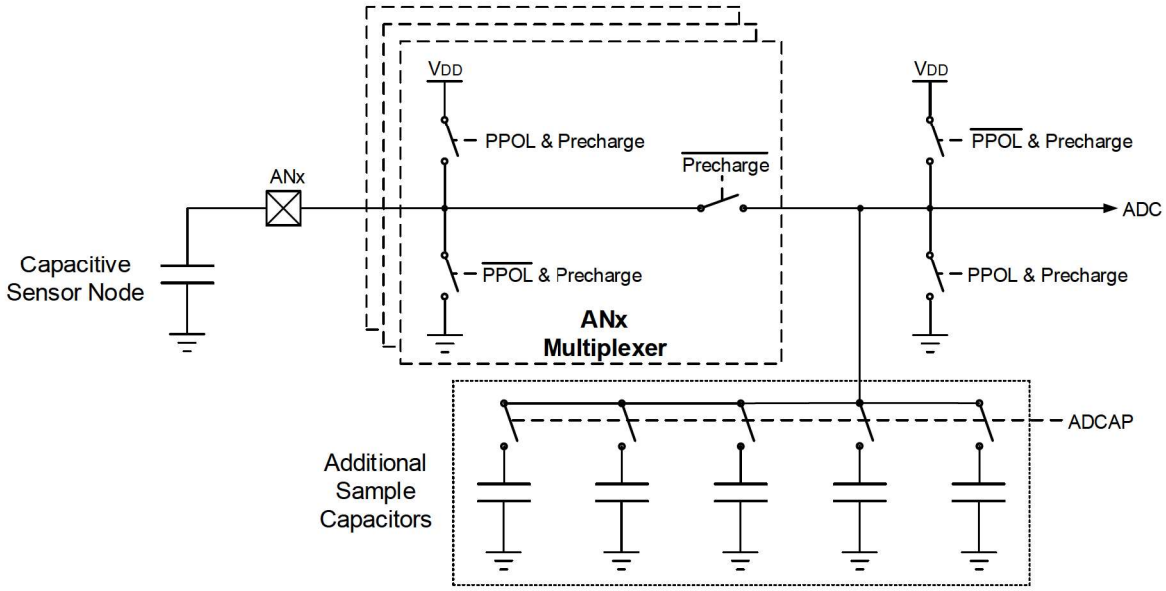

This is an example on how to configure ADC for CVD operation:

1. Configure Port:
   - 1.1. Disable pin output driver (Refer to the TRISx register)
   - 1.2. Configure pin as analog (Refer to the ANSELx register)
2. Configure the ADC module:
   - 2.1. Select ADC conversion clock
   - 2.2. Configure voltage reference
   - 2.3. Select ADC input channel
   - 2.4. Configure precharge (ADPRE) and acquisition (ADACQ) time period
   - 2.5. Select precharge polarity (PPOL)

2.6. Enable Double Sampling (DSEN)
2.7. Turn on ADC module
3. Configure ADC interrupt (optional):
3.1. Clear ADC interrupt flag
3.2. Enable ADC interrupt
3.3. Enable global interrupt (GIE bit)(1)
4. Start double sample conversion by setting the GO bit.
5. Wait for ADC conversion to complete by one of the following:
5.1. Polling the GO bit
5.2. Waiting for the ADC interrupt (if interrupt is enabled)
6. Second ADC conversion depends on the state of CONT:
6.1. If CONT = 1, both conversion will repeat automatically from a single trigger
6.2. If CONT = 0, each conversion must be triggered separately
7. ADERR register contains the CVD result
8. Clear the ADC interrupt flag (if interrupt is enabled).

Note:

1. With global interrupts disabled (GIE = 0), the device will wake from Sleep but will not enter an Interrupt Service Routine.

40.6.1 CVD Operation

A CVD operation begins with the ADC's internal Sample-and-Hold capacitor (C_{HOLD}) being disconnected from the path which connects it to the external capacitive sensor node. While disconnected, C_{HOLD} is precharged to V_{DD} or discharged to V_{SS}. The sensor node is either discharged or charged to V_{SS} or V_{DD}, respectively to the opposite level of C_{HOLD}. When the precharge phase is complete, the V_{DD}/V_{SS} bias paths for the two nodes are disconnected and the paths between C_{HOLD} and the external sensor node is reconnected, at which time the acquisition phase of the CVD operation begins. During acquisition, a capacitive voltage divider is formed between the precharged C_{HOLD} and sensor nodes, which results in a final voltage level setting on C_{HOLD} which is determined by the capacitances and precharge levels of the two nodes. After acquisition, the ADC converts the voltage level on C_{HOLD}. This process is then repeated with the selected precharge levels inverted for both the C_{HOLD} and the sensor nodes. The waveform for two CVD measurements, which is known as differential CVD measurement, is shown in the following figure.

Figure 40-8. Differential CVD Measurement Waveform

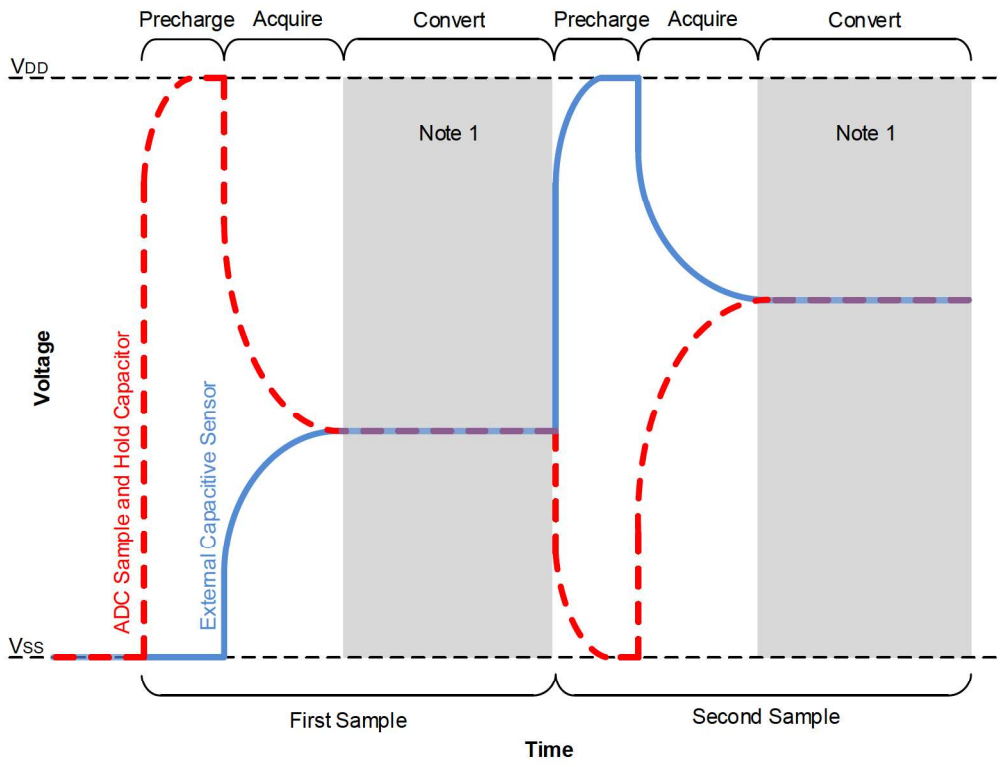

Note 1: **External Capacitive Sensor voltage during the conversion phase may vary as per the configuration of the corresponding pin.**

40.6.2 Precharge Control

The Precharge stage is the period of time that brings the external channel and internal Sample-and-Hold capacitor to known voltage levels. Precharge is enabled by writing a nonzero value to the ADPRE register. This stage is initiated when an ADC conversion begins, either from setting the GO bit, a Special Event Trigger, or a conversion restart from the computation functionality. If the ADPRE register is cleared when an ADC conversion begins, this stage is skipped.

During the precharge time, C_{HOLD} is disconnected from the outer portion of the sample path that leads to the external capacitive sensor and is connected to either V_{DD} or V_{SS}, depending on the value of the PPOL bit. At the same time, the PORT pin logic of the selected analog channel is overridden to drive a digital high or low out, in order to precharge the outer portion of the ADC's sample path, which includes the external sensor. The output polarity of this override is determined by the PPOL bit such that the external sensor cap is charged opposite that of the internal C_{HOLD} cap. The amount of time for precharge is controlled by the ADPRE register.

Important: The external charging overrides the TRIS/LAT/Guard outputs setting of the respective I/O pin. If there is a device attached to this pin, precharge should not be used.

40.6.3 Acquisition Control for CVD (ADPRE > 0)

The Acquisition stage allows time for the voltage on the internal Sample-and-Hold capacitor to charge or discharge from the selected analog channel. This acquisition time is controlled by the ADACQ register. The acquisition stage begins when precharge stage ends.

At the start of the acquisition stage, the PORT pin logic of the selected analog channel is overridden to turn off the digital high/low output drivers so they do not affect the final result of the charge averaging. Also, the selected ADC

channel is connected to C_{HOLD}. This allows charge averaging to proceed between the precharged channel and the C_{HOLD} capacitor.

Important: When ADPRE > 0 setting ADACQ to '0' will set a maximum acquisition time. When precharge is disabled, setting ADACQ to '0' will disable hardware acquisition time control.

40.6.4 Guard Ring Outputs

Figure 40-9 shows a typical guard ring circuit. C_{GUARD} represents the capacitance of the guard ring trace placed on the PCB. The user selects values for R_A and R_B that will create a voltage profile on C_{GUARD}, which will match the selected acquisition channel.

The purpose of the guard ring is to generate a signal in phase with the CVD sensing signal to minimize the effects of the parasitic capacitance on sensing electrodes. It also can be used as a mutual drive for mutual capacitive sensing. For more information about active guard and mutual drive, refer to the following Microchip application note, available on the corporate website (www.microchip.com):

- AN1478, *"mTouch™ Sensing Solution Acquisition Methods Capacitive Voltage Divider"*

The ADC has two guard ring drive outputs, ADGRDA and ADGRDB. These outputs are routed through PPS controls to I/O pins. Refer to the **"PPS - Peripheral Pin Select Module"** chapter for more details. The polarity of these outputs is controlled by the GPOL and IPEN bits.

At the start of the first precharge stage, both outputs are set to match the GPOL bit. Once the acquisition stage begins, ADGRDA changes polarity, while ADGRDB remains unchanged. When performing a double sample conversion, setting the IPEN bit causes both guard ring outputs to transition to the opposite polarity of GPOL at the start of the second precharge stage, and ADGRDA toggles again for the second acquisition. For more information on the timing of the guard ring output, refer to Figure 40-10.

Figure 40-9. Guard Ring Circuit

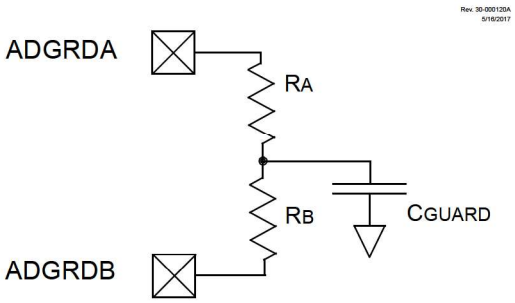

Figure 40-10. Differential CVD with Guard Ring Output Waveform

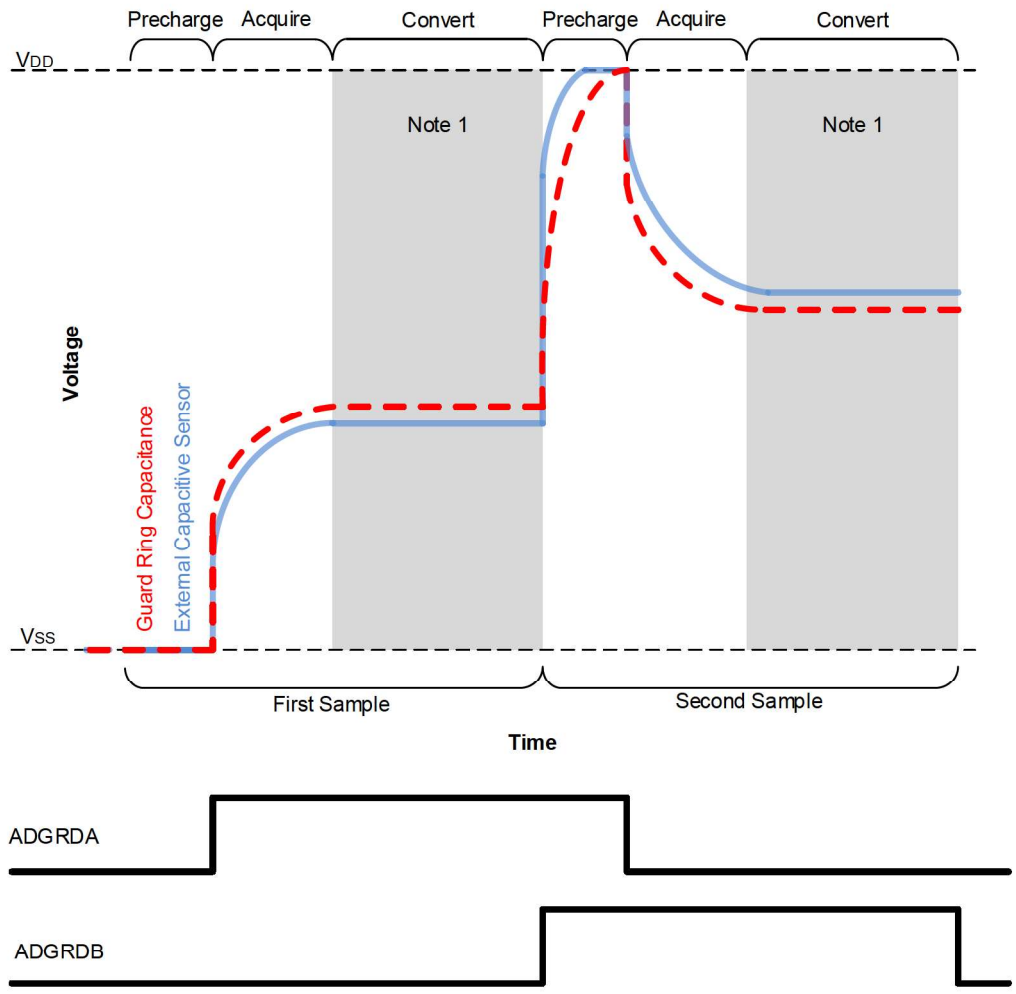

Note 1: **External Capacitive Sensor voltage during the conversion phase may vary as per the configuration of the corresponding pin.**

40.6.5 Additional Sample-and-Hold Capacitance

Additional capacitance can be added in parallel with the internal Sample-and-Hold capacitor (C_{HOLD}) by using the ADCAP register. This register selects a digitally programmable capacitance that is added to the ADC conversion bus, increasing the effective internal capacitance of the Sample-and-Hold capacitor in the ADC module. This is used to improve the match between internal and external capacitance for a better sensing performance. The additional capacitance does not affect analog performance of the ADC because it is not connected during conversion.

40.7 Register Definitions: ADC Control

Long bit name prefixes for the ADC peripherals are shown in the following table. Refer to the **"Long Bit Names"** section of the **"Register and Bit Naming Conventions"** chapter for more information.

Table 40-4. ADC Long Bit Name Prefixes

Peripheral	Bit Name Prefix
ADC	AD

40.7.1 ADCON0

Name: ADCON0
Address: 0x3F3

ADC Control Register 0

Bit	7	6	5	4	3	2	1	0
	ON	CONT		CS		FM		GO
Access	R/W	R/W		R/W		R/W		R/W/HC/HS
Reset	0	0		0		0		0

Bit 7 – ON ADC Enable

Value	Description
1	ADC is enabled
0	ADC is disabled

Bit 6 – CONT ADC Continuous Operation Enable

Value	Description
1	GO is retriggered upon completion of each conversion trigger until ADTIF is set (if SOI is set) or until GO is cleared (regardless of the value of SOI)
0	ADC is cleared upon completion of each conversion trigger

Bit 4 – CS ADC Clock Selection

Value	Description
1	Clock supplied from ADCRC dedicated oscillator
0	Clock supplied by F_{OSC}, divided according to ADCLK register

Bit 2 – FM ADC Results Format/Alignment Selection

Value	Description
1	ADRES and ADPREV data are right justified
0	ADRES and ADPREV data are left justified, zero-filled

Bit 0 – GO ADC Conversion Status(1,2)

Value	Description
1	ADC conversion cycle in progress. Setting this bit starts an ADC conversion cycle. The bit is cleared by hardware as determined by the CONT bit
0	ADC conversion completed/not in progress

Notes:

1. This bit requires ON bit to be set.
2. If cleared by software while a conversion is in progress, the results of the conversion up to this point will be transferred to ADRES and the state machine will be reset, but the ADIF Interrupt Flag bit will not be set; filter and threshold operations will not be performed.

40.7.2 ADCON1

Name: ADCON1
Address: 0x3F4

ADC Control Register 1

Bit	7	6	5	4	3	2	1	0
	PPOL	IPEN	GPOL					DSEN
Access	R/W	R/W	R/W					R/W
Reset	0	0	0					0

Bit 7 – PPOL Precharge Polarity
Action During 1st Precharge Stage

Value	Condition	Description
x	ADPRE = 0	Bit has no effect
1	ADPRE > 0	External analog I/O pin is connected to V_{DD} Internal AD sampling capacitor (C_{HOLD}) is connected to V_{SS}
0	ADPRE > 0	External analog I/O pin is connected to V_{SS} Internal AD sampling capacitor (C_{HOLD}) is connected to V_{DD}

Bit 6 – IPEN A/D Inverted Precharge Enable

Value	Condition	Description
x	DSEN = 0	Bit has no effect
1	DSEN = 1	The precharge and guard signals in the second conversion cycle are the opposite polarity of the first cycle
0	DSEN = 1	Both Conversion cycles use the precharge and guards specified by PPOL and GPOL

Bit 5 – GPOL Guard Ring Polarity Selection

Value	Description
1	ADC guard Ring outputs start as digital high during Precharge stage
0	ADC guard Ring outputs start as digital low during Precharge stage

Bit 0 – DSEN Double-Sample Enable

Value	Description
1	Two conversions are processed as a pair. The selected computation is performed after every second conversion.
0	Selected computation is performed after every conversion

40.7.3 ADCON2

Name: ADCON2
Address: 0x3F5

ADC Control Register 2

Bit	7	6	5	4	3	2	1	0
	PSIS	CRS[2:0]			ACLR	MD[2:0]		
Access	R/W	R/W	R/W	R/W	R/W/HC	R/W	R/W	R/W
Reset	0	0	0	0	0	0	0	0

Bit 7 – PSIS ADC Previous Sample Input Select

Value	Description
1	ADFLTR is transferred to ADPREV at start-of-conversion
0	ADRES is transferred to ADPREV at start-of-conversion

Bits 6:4 – CRS[2:0] ADC Accumulated Calculation Right Shift Select

Value	Condition	Description
1 to 6	MD = 'b100	Low-pass filter time constant is 2^{CRS}, filter gain is 1:1(2)
1 to 6	MD = 'b011 to 'b001	The accumulated value is right-shifted by CRS (divided by 2^{CRS})(1,2)
x	MD = 'b000	These bits are ignored

Bit 3 – ACLR A/D Accumulator Clear Command(3)

Value	Description
1	Registers ADACC, ADCNT and the AOV bit are cleared
0	Clearing action is complete (or not started)

Bits 2:0 – MD[2:0] ADC Operating Mode Selection(4)

Value	Description
111-101	Reserved
100	Low-Pass Filter mode
011	Burst Average mode
010	Average mode
001	Accumulate mode
000	Basic (Legacy) mode

Notes:

1. To correctly calculate an average, the number of samples (set in ADRPT) must be 2^{CRS}.
2. CRS = 'b111 and 'b000 are reserved.
3. This bit is cleared by hardware when the accumulator operation is complete; depending on oscillator selections, the delay may be many instructions.
4. See the Computation Operation section for full mode descriptions.

40.7.4 ADCON3

Name: ADCON3
Address: 0x3F6

ADC Control Register 3

Bit	7	6	5	4	3	2	1	0
		CALC[2:0]			SOI	TMD[2:0]		
Access		R/W	R/W	R/W	R/W/HC	R/W	R/W	R/W
Reset		0	0	0	0	0	0	0

Bits 6:4 – CALC[2:0] ADC Error Calculation Mode Select

CALC	ADERR		Application
	DSEN = 0 Single-Sample Mode	DSEN = 1 CVD Double-Sample Mode(1)	
111	Reserved	Reserved	Reserved
110	Reserved	Reserved	Reserved
101	ADFLTR-ADSTPT	ADFLTR-ADSTPT	Average/filtered value vs. setpoint
100	ADPREV-ADFLTR	ADPREV-ADFLTR	First derivative of filtered value(3) (negative)
011	Reserved	Reserved	Reserved
010	ADRES-ADFLTR	(ADRES-ADPREV)-ADFLTR	Actual result vs. averaged/filtered value
001	ADRES-ADSTPT	(ADRES-ADPREV)-ADSTPT	Actual result vs. setpoint
000	ADRES-ADPREV	ADRES-ADPREV	First derivative of single measurement(2)
			Actual CVD result(2)

Notes:
1. When DSEN = 1 and PSIS = 0, ADERR is computed only after every second sample.
2. When PSIS = 0.
3. When PSIS = 1.

Bit 3 – SOI ADC Stop-on-Interrupt

Value	Condition	Description
x	CONT = 0	This bit is not used
1	CONT = 1	GO is cleared when the threshold conditions are met, otherwise the conversion is retriggered
0	CONT = 1	GO is not cleared by hardware, must be cleared by software to stop retriggers

Bits 2:0 – TMD[2:0] Threshold Interrupt Mode Select

Value	Description
111	Interrupt regardless of threshold test results
110	Interrupt if ADERR > ADUTH
101	Interrupt if ADERR ≤ ADUTH
100	Interrupt if ADERR < ADLTH or ADERR > ADUTH
011	Interrupt if ADERR > ADLTH and ADERR < ADUTH
010	Interrupt if ADERR ≥ ADLTH
001	Interrupt if ADERR < ADLTH
000	Never interrupt

40.7.5 ADSTAT

Name: ADSTAT
Address: 0x3F7

ADC Status Register

Bit	7	6	5	4	3	2	1	0
	AOV	UTHR	LTHR	MATH		STAT[2:0]		
Access	R/C/HS/HC	R	R	R/C/HS		R	R	R
Reset	0	0	0	0		0	0	0

Bit 7 – AOV ADC Accumulator Overflow

Value	Description
1	ADACC or ADFLTR or ADERR registers have overflowed
0	ADACC, ADFLTR and ADERR registers have not overflowed

Bit 6 – UTHR ADC Module Greater-than Upper Threshold Flag

Value	Description
1	ADERR > ADUTH
0	ADERR≤ADUTH

Bit 5 – LTHR ADC Module Less-than Lower Threshold Flag

Value	Description
1	ADERR< ADLTH
0	ADERR≥ADLTH

Bit 4 – MATH ADC Module Computation Status
ADC Module Computation Status(1)

Value	Description
1	Registers ADACC, ADFLTR, ADUTH, ADLTH and the AOV bit are updating or have already updated
0	Associated registers/bits have not changed since this bit was last cleared

Bits 2:0 – STAT[2:0] ADC Module Cycle Multi-Stage Status

Value	Description
111	ADC module is in 2nd conversion stage
110	ADC module is in 2nd acquisition stage
101	ADC module is in 2nd precharge stage
100	ADC computation is suspended between 1st and 2nd sample; the computation results are incomplete and awaiting data from the 2nd sample(2,3)
011	ADC module is in 1st conversion stage
010	ADC module is in 1st acquisition stage
001	ADC module is in 1st precharge stage
000	ADC module is not converting

Notes:

1. MATH bit cannot be cleared by software while STAT = 'b100.
2. If ADC clock source is ADCRC, and F_{OSC} < ADCRC, the indicated status may not be valid.
3. STAT = 'b100 appears between the two triggers when DSEN = 1 and CONT = 0.

40.7.6 ADCLK

Name: ADCLK
Address: 0x3FA

ADC Clock divider Register

Bit	7	6	5	4	3	2	1	0
			CS[5:0]					
Access			R/W	R/W	R/W	R/W	R/W	R/W
Reset			0	0	0	0	0	0

Bits 5:0 – CS[5:0] ADC Clock divider Select

Value	Description
n	ADC Clock frequency = $F_{OSC}/(2*(n+1))$

Note: ADC Clock divider is only available if F_{OSC} is selected as the ADC clock source (CS = 0).

40.7.7 ADREF

Name: ADREF
Address: 0x3F8

ADC Reference Selection Register

Bit	7	6	5	4	3	2	1	0
				NREF			PREF[1:0]	
Access				R/W			R/W	R/W
Reset				0			0	0

Bit 4 – NREF ADC Negative Voltage Reference Selection

Value	Description
1	V_{REF}- is connected to external V_{REF}-
0	V_{REF}- is connected to AV_{SS}

Bits 1:0 – PREF[1:0] ADC Positive Voltage Reference Selection

Value	Description
11	V_{REF}+ is connected to internal Fixed Voltage Reference (FVR) module
10	V_{REF}+ is connected to external V_{REF}+
01	Reserved
00	V_{REF}+ is connected to V_{DD}

40.7.8 ADPCH

Name: ADPCH
Address: 0x3EC

ADC Positive Channel Selection Register

Bit	7	6	5	4	3	2	1	0
			PCH[5:0]					
Access			R/W	R/W	R/W	R/W	R/W	R/W
Reset			0	0	0	0	0	0

Bits 5:0 – PCH[5:0] ADC Positive Input Channel Selection

PCH	ADC Positive Channel Input
111111	Fixed Voltage Reference (FVR) Buffer 2(1)
111110	Fixed Voltage Reference (FVR) Buffer 1(1)
111101	DAC1 output(2)
111100	Temperature Indicator(3)
111011	V_{SS} (Analog Ground)
111010	DAC2 output(2)
111001 - 011000	Reserved. No channel connected.
010111	RC7/ANC7(4)
010110	RC6/ANC6(4)
010101	RC5/ANC5
010100	RC4/ANC4
010011	RC3/ANC3
010010	RC2/ANC2
010001	RC1/ANC1
010000	RC0/ANC0
001111	RB7/ANB7(4)
001110	RB6/ANB6(4)
001101	RB5/ANB5(4)
001100	RB4/ANB4(4)
001011 - 000110	Reserved. No channel connected.
000101	RA5/ANA5
000100	RA4/ANA4
000011	RA3/ANA3
000010	RA2/ANA2
000001	RA1/ANA1
000000	RA0/ANA0

Notes:
1. Refer to the **"Fixed Voltage Reference Module"** chapter for more details.
2. Refer to the **"Digital-to-Analog Converter Module"** chapter for more details.
3. Refer to the **"Temperature Indicator Module"** chapter for more details.
4. 20-pin devices only.
5. 14-pin devices only.

40.7.9 ADPRE

Name: ADPRE
Address: 0x3F1

ADC Precharge Time Control Register

Bit	15	14	13	12	11	10	9	8
				PRE[12:8]				
Access				R/W	R/W	R/W	R/W	R/W
Reset				0	0	0	0	0

Bit	7	6	5	4	3	2	1	0
	PRE[7:0]							
Access	R/W	R/W	R/W	R/W	R/W	R/W	R/W	R/W
Reset	0	0	0	0	0	0	0	0

Bits 12:0 – PRE[12:0] Precharge Time Select

PRE	Precharge Time	
	CS = 0	CS = 1
1 1111 1111 1111	8191 clocks of F_{OSC}	8191 clocks of ADCRC
1 1111 1111 1110	8190 clocks of F_{OSC}	8190 clocks of ADCRC
1 1111 1111 1101	8189 clocks of F_{OSC}	8189 clocks of ADCRC
...	...	...
0 0000 0000 0010	2 clocks of F_{OSC}	2 clocks of ADCRC
0 0000 0000 0001	1 clocks of F_{OSC}	1 clocks of ADCRC
0 0000 0000 0000	Not included in the data conversion cycle	

Notes: The individual bytes in this multi-byte register can be accessed with the following register names:

- ADPREH: Accesses the high byte ADPRE[12:8]
- ADPREL: Accesses the low byte ADPRE[7:0]

40.7.10 ADACQ

Name: ADACQ
Address: 0x3EE

ADC Acquisition Time Control Register

Bit	15	14	13	12	11	10	9	8
				ACQ[12:8]				
Access				R/W	R/W	R/W	R/W	R/W
Reset				0	0	0	0	0

Bit	7	6	5	4	3	2	1	0
	ACQ[7:0]							
Access	R/W	R/W	R/W	R/W	R/W	R/W	R/W	R/W
Reset	0	0	0	0	0	0	0	0

Bits 12:0 – ACQ[12:0] Acquisition (charge share time) Select

ACQ	Acquisition Time	
	CS = 0	CS = 1
1 1111 1111 1111	8191 clocks of F_{OSC}	8191 clocks of ADCRC
1 1111 1111 1110	8190 clocks of F_{OSC}	8190 clocks of ADCRC
1 1111 1111 1101	8189 clocks of F_{OSC}	8189 clocks of ADCRC
...	...	...
0 0000 0000 0010	2 clocks of F_{OSC}	2 clocks of ADCRC
0 0000 0000 0001	1 clocks of F_{OSC}	1 clocks of ADCRC
0 0000 0000 0000	Not included in the data conversion cycle(1)	

Note:
1. If ADPRE is not equal to '0', then ACQ = 0 means Acquisition Time is 8192 clocks of F_{OSC} or ADCRC.

Notes: The individual bytes in this multi-byte register can be accessed with the following register names:
- ADACQH: Accesses the high byte ADACQ[12:8]
- ADACQL: Accesses the low byte ADACQ[7:0]

40.7.11 ADCAP

Name: ADCAP
Address: 0x3F0

ADC Additional Sample Capacitor Selection Register

Bit	7	6	5	4	3	2	1	0
				CAP[4:0]				
Access				R/W	R/W	R/W	R/W	R/W
Reset				0	0	0	0	0

Bits 4:0 – CAP[4:0] ADC Additional Sample Capacitor Selection

Value	Description
1 to 31	Number of pF in the additional capacitance
0	No additional capacitance

40.7.12 ADRPT

Name: ADRPT
Address: 0x3E7

ADC Repeat Setting Register

Bit	7	6	5	4	3	2	1	0
	RPT[7:0]							
Access	R/W	R/W	R/W	R/W	R/W	R/W	R/W	R/W
Reset	0	0	0	0	0	0	0	0

Bits 7:0 – RPT[7:0] ADC Repeat Threshold
Determines the number of times that the ADC is triggered for a threshold check. When CNT reaches this value the error threshold is checked. Used when the computation mode is Low-pass Filter, Burst Average, or Average. See the Computation Operation section for more details.

40.7.13 ADCNT

Name: ADCNT
Address: 0x3E6

ADC Repeat Counter Register

Bit	7	6	5	4	3	2	1	0
	CNT[7:0]							
Access	R/W	R/W	R/W	R/W	R/W	R/W	R/W	R/W
Reset	0	0	0	0	0	0	0	0

Bits 7:0 – CNT[7:0] ADC Repeat Count
Counts the number of times that the ADC is triggered before the threshold is checked. When this value reaches RPT then the threshold is checked. Used when the computation mode is Low-pass Filter, Burst Average, or Average. See the Computation Operation section for more details.

40.7.14 ADFLTR

Name: ADFLTR
Address: 0x3E1

ADC Filter Register

Bit	15	14	13	12	11	10	9	8
	FLTR[15:8]							
Access	R	R	R	R	R	R	R	R
Reset	x	x	x	x	x	x	x	x

Bit	7	6	5	4	3	2	1	0
	FLTR[7:0]							
Access	R	R	R	R	R	R	R	R
Reset	x	x	x	x	x	x	x	x

Bits 15:0 – FLTR[15:0] ADC Filter Output - Signed 2's complement
In Accumulate, Average, and Burst Average mode, this is equal to ACC right shifted by the CRS bits. In LPF mode, this is the output of the Low-Pass Filter.

Notes: The individual bytes in this multi-byte register can be accessed with the following register names:

- ADFLTRH: Accesses the high byte ADFLTR[15:8]
- ADFLTRL: Accesses the low byte ADFLTR[7:0]

40.7.15 ADRES

Name: ADRES
Address: 0x3EA

ADC Result Register

Bit	15	14	13	12	11	10	9	8
	RES[15:8]							
Access	R/W	R/W	R/W	R/W	R/W	R/W	R/W	R/W
Reset	0	0	0	0	0	0	0	0

Bit	7	6	5	4	3	2	1	0
	RES[7:0]							
Access	R/W	R/W	R/W	R/W	R/W	R/W	R/W	R/W
Reset	0	0	0	0	0	0	0	0

Bits 15:0 – RES[15:0] ADC Sample Result

Notes: The individual bytes in this multi-byte register can be accessed with the following register names:

- ADRESH: Accesses the high byte ADRES[15:18]
- ADRESL: Accesses the low byte ADRES[7:0]

40.7.16 ADPREV

Name: ADPREV
Address: 0x3E8

ADC Previous Result Register

Bit	15	14	13	12	11	10	9	8
	PREV[15:8]							
Access	R	R	R	R	R	R	R	R
Reset	0	0	0	0	0	0	0	0

Bit	7	6	5	4	3	2	1	0
	PREV[7:0]							
Access	R	R	R	R	R	R	R	R
Reset	0	0	0	0	0	0	0	0

Bits 15:0 – PREV[15:0] Previous ADC Result

Value	Condition	Description
n	PSIS = 1	n = ADFLTR value at the start of current ADC conversion
n	PSIS = 0	n = ADRES at the start of current ADC conversion(1)

Notes:

1. If PSIS = 0, ADPREV is formatted the same way as ADRES is, depending on the FM bit.
2. The individual bytes in this multi-byte register can be accessed with the following register names:
   - ADPREVH: Accesses ADPREV[15:8]
   - ADPREVL: Accesses ADPREV[7:0]

40.7.17 ADACC

Name: ADACC
Address: 0x3E3

ADC Accumulator Register(1)

See the Computation Operation section for more details.

Important: This register contains signed 2's complement accumulator value and the upper unused bits contain copies of the sign bit.

Bit	23	22	21	20	19	18	17	16
							ACC[17:16]	
Access							R/W	R/W
Reset							x	x

Bit	15	14	13	12	11	10	9	8
	ACC[15:8]							
Access	R/W	R/W	R/W	R/W	R/W	R/W	R/W	R/W
Reset	x	x	x	x	x	x	x	x

Bit	7	6	5	4	3	2	1	0
	ACC[7:0]							
Access	R/W	R/W	R/W	R/W	R/W	R/W	R/W	R/W
Reset	x	x	x	x	x	x	x	x

Bits 17:0 – ACC[17:0] ADC Accumulator - Signed 2's Complement

Notes:

1. This register can only be written when GO = 0.
2. The individual bytes in this multi-byte register can be accessed with the following register names:
   - ADACCU: Accesses the upper byte ADACC[17:16]
   - ADACCH: Accesses the high byte ADACC[15:8]
   - ADACCL: Accesses the low byte ADACC[7:0]

40.7.18 ADSTPT

Name: ADSTPT
Address: 0x3DF

ADC Threshold Setpoint Register
Depending on CALC, may be used to determine ADERR.

Bit	15	14	13	12	11	10	9	8
	STPT[15:8]							
Access	R/W	R/W	R/W	R/W	R/W	R/W	R/W	R/W
Reset	0	0	0	0	0	0	0	0

Bit	7	6	5	4	3	2	1	0
	STPT[7:0]							
Access	R/W	R/W	R/W	R/W	R/W	R/W	R/W	R/W
Reset	0	0	0	0	0	0	0	0

Bits 15:0 – STPT[15:0] ADC Threshold Setpoint - Signed 2's Complement

Notes: The individual bytes in this multi-byte register can be accessed with the following register names:

- ADSTPTH: Accesses the high byte ADSTPT[15:8]
- ADSTPTH: Accesses the low byte ADSTPT[7:0]

40.7.19 ADERR

Name: ADERR
Address: 0x3DD

ADC Setpoint Error Register
ADC Setpoint Error calculation is determined by the CALC bits.

Bit	15	14	13	12	11	10	9	8
	ERR[15:8]							
Access	R	R	R	R	R	R	R	R
Reset	x	x	x	x	x	x	x	x

Bit	7	6	5	4	3	2	1	0
	ERR[7:0]							
Access	R	R	R	R	R	R	R	R
Reset	x	x	x	x	x	x	x	x

Bits 15:0 – ERR[15:0] ADC Setpoint Error - Signed 2's Complement

Notes: The individual bytes in this multi-byte register can be accessed with the following register names:

- ADERRH: Accesses the high byte ADERR[15:8]
- ADERRL: Accesses the low byte ADERR[7:0]

40.7.20 ADLTH

Name: ADLTH
Address: 0x3D9

ADC Lower Threshold Register
ADLTH and ADUTH are compared with ADERR to set the UTHR and LTHR bits. Depending on the setting of TMD, an interrupt may be triggered by the results of this comparison.

Bit	15	14	13	12	11	10	9	8
	LTH[15:8]							
Access	R/W	R/W	R/W	R/W	R/W	R/W	R/W	R/W
Reset	0	0	0	0	0	0	0	0

Bit	7	6	5	4	3	2	1	0
	LTH[7:0]							
Access	R/W	R/W	R/W	R/W	R/W	R/W	R/W	R/W
Reset	0	0	0	0	0	0	0	0

Bits 15:0 – LTH[15:0] ADC Lower Threshold - Signed 2's Complement

Notes: The individual bytes in this multi-byte register can be accessed with the following register names:

- ADLTHH: Accesses the high byte ADLTH[15:8]
- ADLTHL: Accesses the low byte ADLTH[7:0]

40.7.21 ADUTH

Name: ADUTH
Address: 0x3DB

ADC Upper Threshold Register
ADLTH and ADUTH are compared with ADERR to set the UTHR and LTHR bits. Depending on the setting of TMD, an interrupt may be triggered by the results of this comparison.

Bit	15	14	13	12	11	10	9	8
	UTH[15:8]							
Access	R/W	R/W	R/W	R/W	R/W	R/W	R/W	R/W
Reset	0	0	0	0	0	0	0	0

Bit	7	6	5	4	3	2	1	0
	UTH[7:0]							
Access	R/W	R/W	R/W	R/W	R/W	R/W	R/W	R/W
Reset	0	0	0	0	0	0	0	0

Bits 15:0 – UTH[15:0] ADC Upper Threshold - Signed 2's Complement

Notes: The individual bytes in this multi-byte register can be accessed with the following register names:

- ADUTHH: Accesses the high byte ADUTH[15:8]
- ADUTHL: Accesses the low byte ADUTH[7:0]

40.7.22 ADACT

Name: ADACT
Address: 0x3F9

ADC Auto Conversion Trigger Source Selection Register

Bit	7	6	5	4	3	2	1	0
				ACT[4:0]				
Access				R/W	R/W	R/W	R/W	R/W
Reset				0	0	0	0	0

Bits 4:0 – ACT[4:0] Auto-Conversion Trigger Select

ACT	Auto-conversioin Trigger Source
11111 - 11010	Reserved
11001	Software write to ADPCH
11000	Software read of ADRESH
10111	Software read of ADERRH
10110	CLC4_OUT
10101	CLC3_OUT
10100	CLC2_OUT
10011	CLC1_OUT
10010	Interrupt-on-change Interrupt Flag
10001	CMP2_OUT
10000	CMP1_OUT
01111	NCO1_OUT
01110	PWM3S1P2_OUT
01101	PWM3S1P1_OUT
01100	PWM2S1P2_OUT
01011	PWM2S1P1_OUT
01010	PWM1S1P2_OUT
01001	PWM1S1P1_OUT
01000	CCP1_trigger
00111	SMT1_overflow
00110	TMR4_postscaled
00101	TMR3_overflow
00100	TMR2_postscaled
00011	TMR1_overflow
00010	TMR0_overflow
00001	Pin selected by ADACTPPS
00000	External Trigger Disabled

40.7.23 ADCP

Name: ADCP
Address: 0x3D8

ADC Charge Pump Control Register

Bit	7	6	5	4	3	2	1	0
	CPON							CPRDY
Access	R/W							R
Reset	0							0

Bit 7 – CPON Charge Pump On Control

Value	Description
1	Charge Pump On when requested by the ADC
0	Charge Pump Off

Bit 0 – CPRDY Charge Pump Ready Status

Value	Description
1	Charge Pump is ready
0	Charge Pump is not ready (or never started)

40.8 Register Summary - ADC

Address	Name	Bit Pos.	7	6	5	4	3	2	1	0
0x00 ... 0x03D7	Reserved									
0x03D8	ADCP	7:0	CPON							CPRDY
0x03D9	ADLTH	7:0	LTH[7:0]							
		15:8	LTH[15:8]							
0x03DB	ADUTH	7:0	UTH[7:0]							
		15:8	UTH[15:8]							
0x03DD	ADERR	7:0	ERR[7:0]							
		15:8	ERR[15:8]							
0x03DF	ADSTPT	7:0	STPT[7:0]							
		15:8	STPT[15:8]							
0x03E1	ADFLTR	7:0	FLTR[7:0]							
		15:8	FLTR[15:8]							
0x03E3	ADACC	7:0	ACC[7:0]							
		15:8	ACC[15:8]							
		23:16							ACC[17:16]	
0x03E6	ADCNT	7:0	CNT[7:0]							
0x03E7	ADRPT	7:0	RPT[7:0]							
0x03E8	ADPREV	7:0	PREV[7:0]							
		15:8	PREV[15:8]							
0x03EA	ADRES	7:0	RES[7:0]							
		15:8	RES[15:8]							
0x03EC	ADPCH	7:0			PCH[5:0]					
0x03ED	Reserved									
0x03EE	ADACQ	7:0	ACQ[7:0]							
		15:8				ACQ[12:8]				
0x03F0	ADCAP	7:0				CAP[4:0]				
0x03F1	ADPRE	7:0	PRE[7:0]							
		15:8				PRE[12:8]				
0x03F3	ADCON0	7:0	ON	CONT		CS		FM		GO
0x03F4	ADCON1	7:0	PPOL	IPEN	GPOL					DSEN
0x03F5	ADCON2	7:0	PSIS	CRS[2:0]			ACLR	MD[2:0]		
0x03F6	ADCON3	7:0		CALC[2:0]			SOI	TMD[2:0]		
0x03F7	ADSTAT	7:0	AOV	UTHR	LTHR	MATH		STAT[2:0]		
0x03F8	ADREF	7:0				NREF			PREF[1:0]	
0x03F9	ADACT	7:0				ACT[4:0]				
0x03FA	ADCLK	7:0			CS[5:0]					

41. DAC - Digital-to-Analog Converter Module

The Digital-to-Analog Converter (DAC) supplies a variable voltage reference, ratiometric with the input source, with programmable selectable output levels.

The positive and negative input references (V_{REF}+ and V_{REF}-) can each be selected from several sources.

The output of the DAC (DACx_output) can be selected as a reference voltage to several other peripherals or routed to output pins.

The Digital-to-Analog Converter (DAC) is enabled by setting the EN bit.

Important: This family of devices has two DAC modules. The DAC1 module has a buffered output that can be connected to any of the designated DAC output pins. The DAC2 module has no output pins or buffer, and the output is only connected internally to the CMP module.

Figure 41-1. Digital-to-Analog Converter Block Diagram

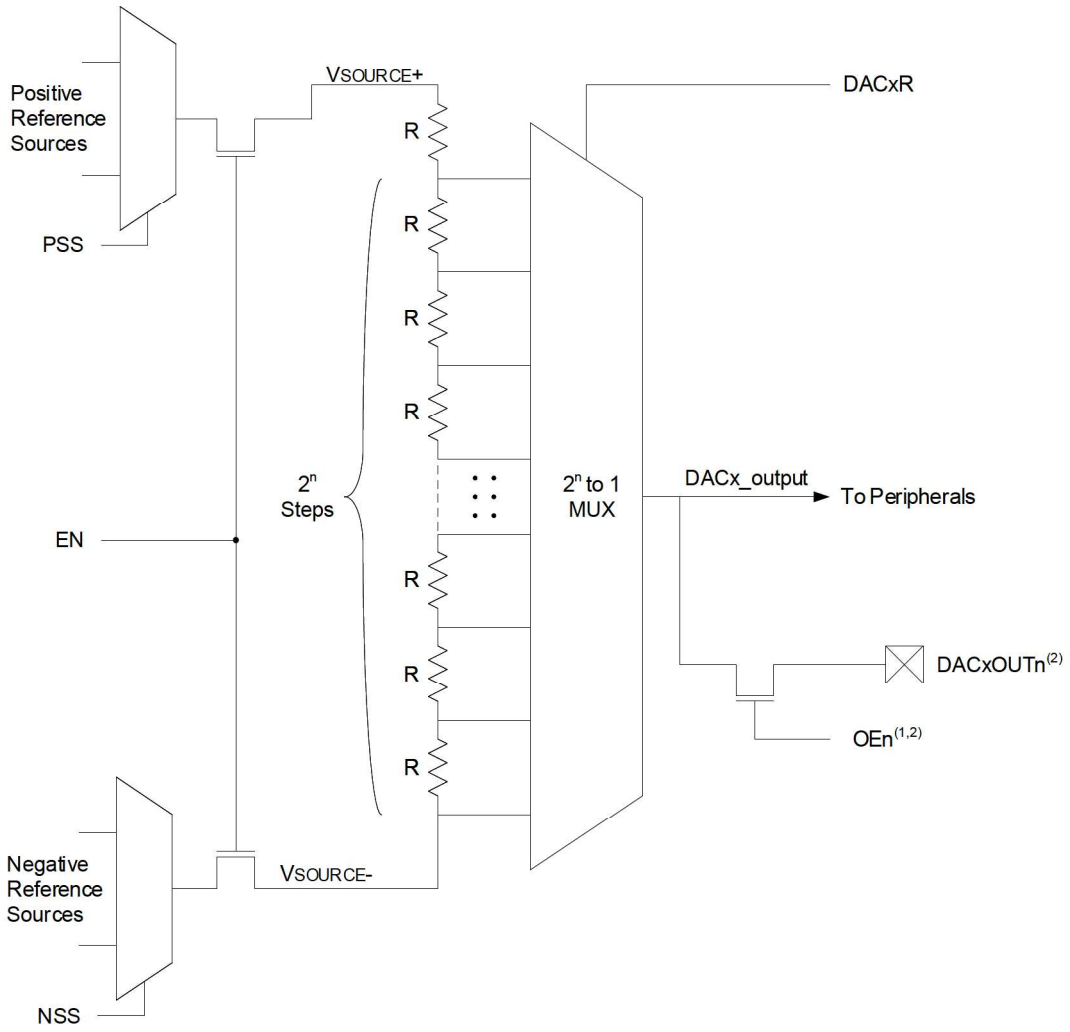

Note 1: The output enable bits are configured so that they act as a “one-hot” system, meaning only one DAC output can be enabled at a time.
2: DAC2 has no output buffer; the output from DAC2 is only connected internally to the specified peripherals.

41.1 Output Voltage Selection

The DAC has 2^n voltage level ranges, where n is the number of bits in DACR. Each level is determined by the DACxR bits. The DAC output voltage can be determined by using Equation 41-1.

Equation 41-1. DAC Output Equation

$$DACx_output = \left(\left(V_{REF+} - V_{REF-} \right) \times \frac{DACR}{2^n} \right) + V_{REF-}$$

41.2 Ratiometric Output Level

The DAC output value is derived using a resistor ladder with each end of the ladder tied to a positive and negative voltage reference input source. If the voltage of either input source fluctuates, a similar fluctuation will result in the DAC output value.

The value of the individual resistors within the ladder can be found in the **"Electrical Specifications"** chapter for each respective device.

41.3 Operation During Sleep

When the device wakes from Sleep through an interrupt or a WWDT Time-out Reset, the contents of the DACxCON and DACxDATL registers are not affected. To minimize current consumption in Sleep mode, the voltage reference should be disabled.

41.4 Effects of a Reset

A device Reset affects the following:

- The DAC module is disabled
- The DAC output voltage is removed from the DACxOUTn pin(s)
- The DACxR bits are cleared

41.5 Register Definitions: DAC Control

Long bit name prefixes for the DAC are shown in the table below. Refer to the **"Long Bit Names"** section in the **"Register and Bit Naming Conventions"** chapter for more information.

Table 41-1. DAC Long Bit Name Prefixes

Peripheral	Bit Name Prefix
DAC1	DAC1
DAC2	DAC2

41.5.1 DACxCON

Name: DACxCON
Address: 0x7F

Digital-to-Analog Converter Control Register

Bit	7	6	5	4	3	2	1	0
	EN		OE[1:0]		PSS[1:0]			NSS
Access	R/W		R/W	R/W	R/W	R/W		R/W
Reset	0		0	0	0	0		0

Bit 7 – EN DAC Enable

Value	Description
1	DAC is enabled
0	DAC is disabled

Bits 5:4 – OE[1:0] DAC Output Enable

OE	DAC1
11	DACxOUT is disabled
10	DACxOUT is enabled on pin RA2 only
01	DACxOUT is enabled on pin RA0 only
00	DACxOUT is disabled

Bits 3:2 – PSS[1:0] DAC Positive Reference Selection

PSS	DAC Positive Reference
11	Reserved, do not use
10	FVR Buffer 2
01	$V_{REF}+$
00	V_{DD}

Bit 0 – NSS DAC Negative Reference Selection

NSS	DAC Negative Reference
1	$V_{REF}-$
0	V_{SS}

41.5.2 DACxCON

Name: DACxCON
Address: 0xA2

Important: This instance of the DAC module has no output pins or buffer; the output of this DAC is only connected internally to be used with the Comparator module.

Digital-to-Analog Converter Control Register

Bit	7	6	5	4	3	2	1	0
	EN				PSS[1:0]			NSS
Access	R/W				R/W	R/W		R/W
Reset	0				0	0		0

Bit 7 – EN DAC Enable

Value	Description
1	DAC is enabled
0	DAC is disabled

Bits 3:2 – PSS[1:0] DAC Positive Reference Selection

PSS	DAC Positive Reference
11	Reserved, do not use
10	FVR Buffer 2
01	$V_{REF}+$
00	V_{DD}

Bit 0 – NSS DAC Negative Reference Selection

NSS	DAC Negative Reference
1	$V_{REF}-$
0	V_{SS}

41.5.3 DACxDATL

Name: DACxDATL
Address: 0x7D

Digital-to-Analog Converter Data Register

Bit	7	6	5	4	3	2	1	0
	DACxR[7:0]							
Access	R/W	R/W	R/W	R/W	R/W	R/W	R/W	R/W
Reset	0	0	0	0	0	0	0	0

Bits 7:0 – DACxR[7:0] Data Input Bits for DAC Value

41.5.4 DACxDATL

Name: DACxDATL
Address: 0xA0

Digital-to-Analog Converter Data Register

Bit	7	6	5	4	3	2	1	0
	DACxR[7:0]							
Access	R/W	R/W	R/W	R/W	R/W	R/W	R/W	R/W
Reset	0	0	0	0	0	0	0	0

Bits 7:0 – DACxR[7:0] Data Input Bits for DAC Value

41.6 Register Summary - DAC

Address	Name	Bit Pos.	7	6	5	4	3	2	1	0
0x00 ... 0x7C	Reserved									
0x7D	DAC1DATL	7:0	DAC1R[7:0]							
0x7E	Reserved									
0x7F	DAC1CON	7:0	EN		OE[1:0]		PSS[1:0]			NSS
0x80 ... 0x9F	Reserved									
0xA0	DAC2DATL	7:0	DAC2R[7:0]							
0xA1	Reserved									
0xA2	DAC2CON	7:0	EN				PSS[1:0]			NSS

42. CMP - Comparator Module

Comparators are used to interface analog circuits to a digital circuit by comparing two analog voltages and providing a digital indication of their relative magnitudes. Comparators are very useful mixed signal building blocks because they provide analog functionality independent of program execution.

The analog comparator module includes the following features:

- Programmable input selection
- Programmable output polarity
- Rising/falling output edge interrupts
- Wake-up from Sleep
- Selectable voltage reference
- ADC auto-trigger
- Inter-connections with other available modules (e.g., timer clocks)

42.1 Comparator Overview

A single comparator is shown in Figure 42-1 along with the relationship between the analog input levels and the digital output. When the analog voltage at V_{IN}+ is less than the analog voltage at V_{IN}-, the output of the comparator is a digital low level. When the analog voltage at V_{IN}+ is greater than the analog voltage at V_{IN}-, the output of the comparator is a digital high level.

Figure 42-1. Single Comparator

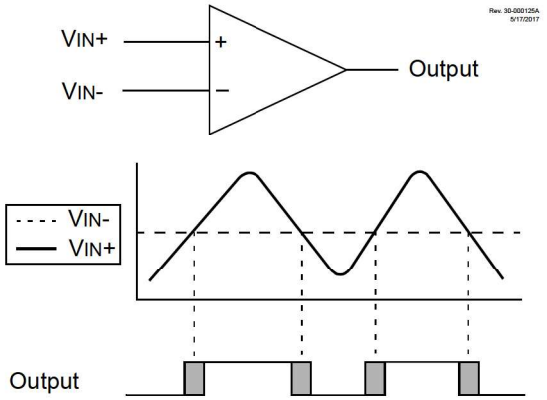

Note:

1. The black areas of the output of the comparator represent the uncertainty due to input offsets and response time.

Figure 42-2. Comparator Module Simplified Block Diagram

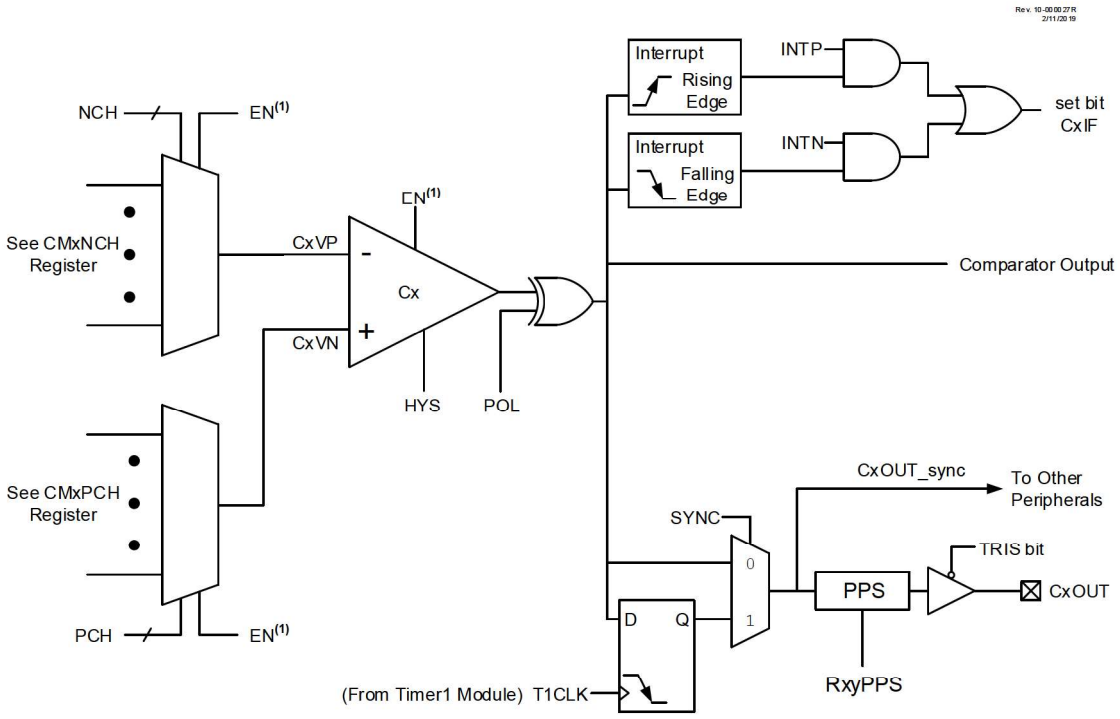

Note 1: **When EN = 0, all multiplexer inputs are disconnected and the Comparator will produce a '0' at the output.**

42.2 Comparator Control

Each comparator has two control registers: CMxCON0 and CMxCON1.

The CMxCON0 register contains Control and Status bits for the following:

- Enable
- Output
- Output Polarity
- Hysteresis Enable
- Timer1 Output Synchronization

The CMxCON1 register contains Control bits for the following:

- Interrupt on Positive/Negative Edge Enables

The CMxPCH and CMxNCH registers are used to select the positive and negative input channels, respectively.

42.2.1 Comparator Enable

Setting the EN bit enables the comparator for operation. Clearing the EN bit disables the comparator, resulting in minimum current consumption.

42.2.2 Comparator Output

The output of the comparator can be monitored in two different registers. Each output can be read individually by reading the OUT bit. Outputs of all the comparators can be collectively accessed by reading the CMOUT register.

The comparator output can also be routed to an external pin through the RxyPPS register. Refer to the **"PPS - Peripheral Pin Select Module"** chapter for more details. The corresponding TRIS bit must be clear to enable the pin as an output.

Important: The internal output of the comparator is latched with each instruction cycle. Unless otherwise specified, external outputs are not latched.

42.2.3 Comparator Output Polarity

Inverting the output of the comparator is functionally equivalent to swapping the comparator inputs. The polarity of the comparator output can be inverted by setting the POL bit. Clearing the POL bit results in a non-inverted output. Table 42-1 shows the output state versus input conditions, including polarity control.

Table 42-1. COMPARATOR OUTPUT STATE VS. INPUT CONDITIONS

Input Condition	POL	OUT
CxVn > CxVp	0	0
CxVn < CxVp	0	1
CxVn > CxVp	1	1
CxVn < CxVp	1	0

42.3 Comparator Output Synchronization

The output from a comparator can be synchronized with Timer1 by setting the SYNC bit.

Once enabled, the comparator output is latched on the falling edge of the Timer1 source clock. If a prescaler is used with Timer1, the comparator output is latched after the prescaling function. To prevent a race condition, the comparator output is latched on the falling edge of the Timer1 clock source and Timer1 increments on the rising edge of its clock source. A simplified block diagram of the comparator module is shown in Figure 42-2. Refer to the **"TMR1 - Timer1 Module with Gate Control"** chapter for more details.

42.4 Comparator Hysteresis

A selectable amount of separation voltage can be added to the input pins of each comparator to provide a hysteresis function to the overall operation. Hysteresis is enabled by setting the HYS bit.

See Comparator Specifications for more information.

42.5 Comparator Interrupt

An interrupt can be generated for every rising or falling edge of the comparator output.

When either edge detector is triggered and its associated enable bit is set (INTP and/or INTN bits), the Corresponding Interrupt Flag bit (CxIF bit of the respective PIR register) will be set.

To enable the interrupt, the following bits must be set:

- EN bit
- INTP bit (for a rising edge detection)
- INTN bit (for a falling edge detection)
- CxIE bit of the respective PIE register
- GIE bit of the INTCON0 register

The associated interrupt flag bit, CxIF bit of the respective PIR register, must be cleared in software to successfully detect another edge.

Important: Although a comparator is disabled, an interrupt will be generated by changing the output polarity with the POL bit.

42.6 Comparator Positive Input Selection

Configuring the PCH bits direct an internal voltage reference or an analog pin to the non-inverting input of the comparator.

Any time the comparator is disabled (EN = 0), all comparator inputs are disabled.

42.7 Comparator Negative Input Selection

The NCH bits direct an analog input pin, internal reference voltage or analog ground to the inverting input of the comparator.

Important: To use CxINy+ and CxINy- pins as analog input, the appropriate bits must be set in the ANSEL register and the corresponding TRIS bits must also be set to disable the output drivers.

42.8 Comparator Response Time

The comparator output is indeterminate for a period of time after the change of an input source or the selection of a new reference voltage. This period is referred to as the response time. The response time of the comparator differs from the settling time of the voltage reference. Therefore, both of these times must be considered when determining the total response time to a comparator input change. See the Comparator and Voltage Reference Specifications in Comparator Specifications and Fixed Voltage Reference (FVR) Specifications for more details.

42.9 Analog Input Connection Considerations

A simplified circuit for an analog input is shown in Figure 42-3. Since the analog input pins share their connection with a digital input, they have reverse biased ESD protection diodes to V_{DD} and V_{SS}. The analog input, therefore, must be between V_{SS} and V_{DD}. If the input voltage deviates from this range by more than 0.6V in either direction, one of the diodes is forward biased and abnormal behavior may occur.

A maximum source impedance of 10 kΩ is recommended for the analog sources. Also, any external component connected to an analog input pin, such as a capacitor or a Zener diode, should have very little leakage current to minimize corrupting the result.

Notes:

1. When reading a PORT register, all pins configured as analog inputs will read as a '0'. Pins configured as digital inputs will convert as an analog input, according to the input specification.
2. Analog levels on any pin defined as a digital input, may cause the input buffer to consume more current than is specified.

Figure 42-3. Analog Input Model

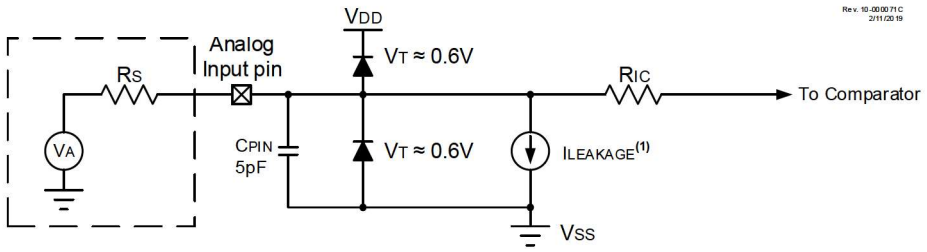

Legend: CPIN = Input Capacitance
ILEAKAGE = Leakage Current at the pin due to various junctions
RIC = Interconnect Resistance
RS = Source Impedance
VA = Analog Voltage
VT = Diode Forward Voltage

Note:
1. See *Electrical Specification* chapter.

42.10 Operation in Sleep Mode

The comparator module can operate during Sleep. A comparator interrupt will wake the device from Sleep. The CxIE bits of the respective PIE register must be set to enable comparator interrupts.

The comparator clock source is based on the Timer1 clock source. If the Timer1 clock source is either the system clock (F_{OSC}) or the instruction clock ($F_{OSC}/4$), Timer1 will not operate during Sleep, and synchronized comparator outputs will not operate.

42.11 ADC Auto-Trigger Source

The output of the comparator module can be used to trigger an ADC conversion. When the ADACT register is set to trigger on a comparator output, an ADC conversion will trigger when the comparator output goes high.

42.12 Register Definitions: Comparator Control

Long bit name prefixes for the comparator peripherals are shown in the table below. Refer to the **"Long Bit Names"** section in the **"Register and Bit Naming Conventions"** chapter for more information.

Table 42-2. Comparator Long bit name prefixes

Peripheral	Bit Name Prefix
C1	C1
C2	C2

42.12.1 CMxCON0

Name: CMxCON0
Address: 0x070,0x074

Comparator Control Register 0

Bit	7	6	5	4	3	2	1	0
	EN	OUT		POL			HYS	SYNC
Access	R/W	R		R/W			R/W	R/W
Reset	0	0		0			0	0

Bit 7 – EN Comparator Enable

Value	Description
1	Comparator is enabled
0	Comparator is disabled and consumes no active power

Bit 6 – OUT Comparator Output

Value	Condition	Description
1	If POL = 0 (non-inverted polarity):	CxVP > CxVN
0	If POL = 0 (non-inverted polarity):	CxVP < CxVN
1	If POL = 1 (inverted polarity):	CxVP < CxVN
0	If POL = 1 (inverted polarity):	CxVP > CxVN

Bit 4 – POL Comparator Output Polarity Select

Value	Description
1	Comparator output is inverted
0	Comparator output is not inverted

Bit 1 – HYS Comparator Hysteresis Enable

Value	Description
1	Comparator hysteresis enabled
0	Comparator hysteresis disabled

Bit 0 – SYNC Comparator Output Synchronous Mode

Value	Description
1	Comparator output to Timer1 and I/O pin is synchronous to changes on Timer1 clock source. Output updated on the falling edge of Timer1 clock source.
0	Comparator output to Timer1 and I/O pin is asynchronous

42.12.2 CMxCON1

Name: CMxCON1
Address: 0x071,0x075

Comparator Control Register 1

Bit	7	6	5	4	3	2	1	0
							INTP	INTN
Access							R/W	R/W
Reset							0	0

Bit 1 – INTP Comparator Interrupt on Positive-Going Edge Enable

Value	Description
1	The CxIF interrupt flag will be set upon a positive-going edge of the CxOUT bit
0	No interrupt flag will be set on a positive-going edge of the CxOUT bit

Bit 0 – INTN Comparator Interrupt on Negative-Going Edge Enable

Value	Description
1	The CxIF interrupt flag will be set upon a negative-going edge of the CxOUT bit
0	No interrupt flag will be set on a negative-going edge of the CxOUT bit

42.12.3 CMxNCH

Name: CMxNCH
Address: 0x072,0x076

Comparator Inverting Channel Select Register

Bit	7	6	5	4	3	2	1	0
						NCH[2:0]		
Access						R/W	R/W	R/W
Reset						0	0	0

Bits 2:0 – NCH[2:0] Comparator Inverting Input Channel Select

NCH	Negative Input Sources
111	V_{SS}
110	FVR_Buffer2
101	NCH not connected
100	NCH not connected
011	CxIN3-
010	CxIN2-
001	CxIN1-
000	CxIN0-

42.12.4 CMxPCH

Name: CMxPCH
Address: 0x073,0x077

Comparator Non-Inverting Channel Select Register

Bit	7	6	5	4	3	2	1	0
						PCH[2:0]		
Access						R/W	R/W	R/W
Reset						0	0	0

Bits 2:0 – PCH[2:0] Comparator Non-Inverting Input Channel Select

PCH	Positive Input Sources
111	V_{SS}
110	FVR_Buffer2
101	DAC2_Output
100	PCH not connected
011	PCH not connected
010	PCH not connected
001	PCH not connected
000	CxIN0+

42.12.5 CMOUT

Name: CMOUT
Address: 0x06F

Comparator Output Register

Bit	7	6	5	4	3	2	1	0
							C2OUT	C1OUT
Access							R	R
Reset							0	0

Bits 0, 1 – CxOUT Mirror copy of the CMxCON0.OUT

42.13 Register Summary - Comparator

Address	Name	Bit Pos.	7	6	5	4	3	2	1	0
0x00 ... 0x6E	Reserved									
0x6F	CMOUT	7:0							C2OUT	C1OUT
0x70	CM1CON0	7:0	EN	OUT		POL			HYS	SYNC
0x71	CM1CON1	7:0							INTP	INTN
0x72	CM1NCH	7:0						NCH[2:0]		
0x73	CM1PCH	7:0						PCH[2:0]		
0x74	CM2CON0	7:0	EN	OUT		POL			HYS	SYNC
0x75	CM2CON1	7:0							INTP	INTN
0x76	CM2NCH	7:0						NCH[2:0]		
0x77	CM2PCH	7:0						PCH[2:0]		

43. ZCD - Zero-Cross Detection Module

The ZCD module detects when an A/C signal crosses through the ground potential. The actual zero crossing threshold is the zero crossing reference voltage, Z_{CPINV}, which is typically 0.75V above ground.

The connection to the signal to be detected is through a series current-limiting resistor. The module applies a current source or sink to the ZCD pin to maintain a constant voltage on the pin, thereby preventing the pin voltage from forward biasing the ESD protection diodes. When the applied voltage is greater than the reference voltage, the module sinks current. When the applied voltage is less than the reference voltage, the module sources current. The current source and sink action keeps the pin voltage constant over the full range of the applied voltage. The ZCD module is shown in the following simplified block diagram.

Figure 43-1. Simplified ZCD Block Diagram

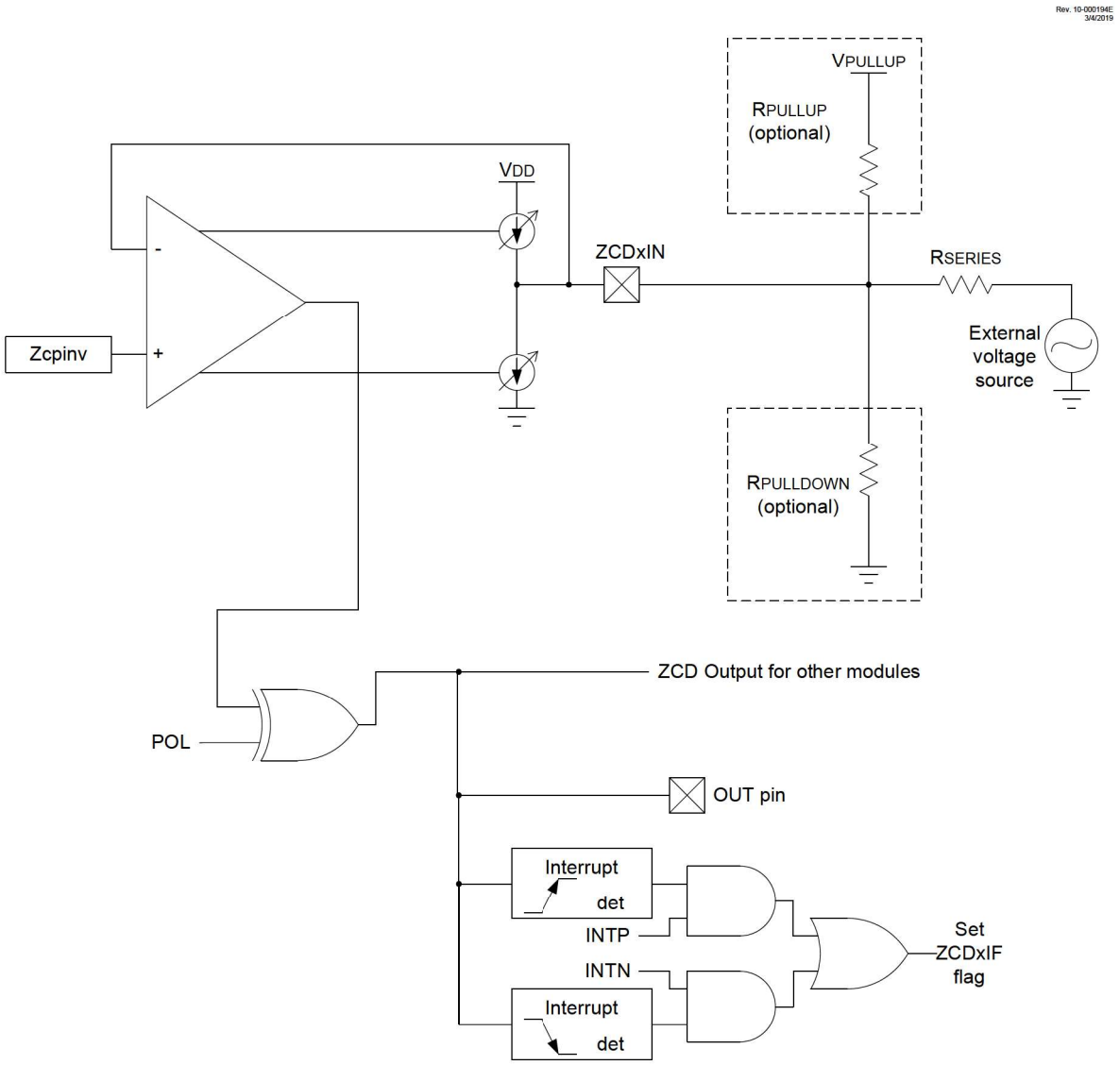

The ZCD module is useful when monitoring an A/C waveform for, but not limited to, the following purposes:

- A/C period measurement
- Accurate long term time measurement

- Dimmer phase delayed drive
- Low EMI cycle switching

43.1 External Resistor Selection

The ZCD module requires a current-limiting resistor in series with the external voltage source. The impedance and rating of this resistor depends on the external source peak voltage. Select a resistor value that will drop all of the peak voltage when the current through the resistor is nominally 300 µA. Make sure that the ZCD I/O pin internal weak pull-up is disabled so it does not interfere with the current source and sink.

Equation 43-1. External Resistor

$$R_{SERIES} = \frac{V_{PEAK}}{3 \times 10^{-4}}$$

Figure 43-2. External Voltage Source

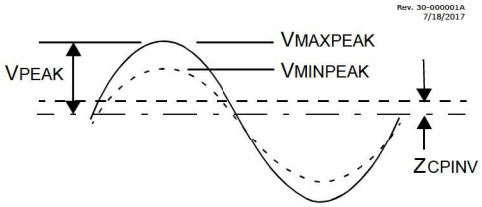

43.2 ZCD Logic Output

The ZCD module includes a Status bit, which can be read to determine whether the current source or sink is active. The OUT bit is set when the current sink is active, and cleared when the current source is active. The OUT bit is affected by the polarity bit.

The OUT signal can also be used as input to other modules. This is controlled by the registers of the corresponding module.

43.3 ZCD Logic Polarity

The POL bit inverts the OUT bit relative to the current source and sink output. When the POL bit is set, a OUT high indicates that the current source is active, and a low output indicates that the current sink is active. The POL bit affects the ZCD interrupts.

43.4 ZCD Interrupts

An interrupt will be generated upon a change in the ZCD logic output when the appropriate interrupt enables are set. The ZCD module has a rising edge detector and a falling edge detector.

The ZCDIF bit of the PIRx register will be set when either edge detector is triggered and its associated enable bit is set. The INTP enables rising edge interrupts and the INTN bit enables falling edge interrupts.

To fully enable the interrupt, the following bits must be set:

- ZCDIE bit of the PIEx register
- INTP bit for rising edge detection
- INTN bit for falling edge detection
- GIEL and GIE bits of the INTCON0 register

Changing the POL bit will cause an interrupt, regardless of the level of the SEN bit.

The ZCDIF bit of the PIRx register must be cleared in software as part of the interrupt service. If another edge is detected while this flag is being cleared, the flag will still be set at the end of the sequence.

43.5 Correction for Z_{CPINV} Offset

The actual voltage at which the ZCD switches is the reference voltage at the noninverting input of the ZCD op amp. For external voltage source waveforms other than square waves, this voltage offset from zero causes the zero-cross event to occur either too early or too late.

43.5.1 Correction by AC Coupling

When the external voltage source is sinusoidal, the effects of the Z_{CPINV} offset can be eliminated by isolating the external voltage source from the ZCD pin with a capacitor, in addition to the voltage reducing resistor. The capacitor will cause a phase shift resulting in the ZCD output switch in advance of the actual zero crossing event. The phase shift will be the same for both rising and falling zero crossings, which can be compensated for by either delaying the CPU response to the ZCD switch by a timer or other means, or selecting a capacitor value large enough that the phase shift is negligible.

To determine the series resistor and capacitor values for this configuration, start by computing the impedance, Z, to obtain a peak current of 300 µA. Next, arbitrarily select a suitably large non-polar capacitor and compute its reactance, Xc, at the external voltage source frequency. Finally, compute the series resistor, capacitor peak voltage, and phase shift by the formulas shown below.

When this technique is used and the input signal is not present, the ZCD will tend to oscillate. To avoid this oscillation, connect the ZCD pin to V_{DD} or GND with a high-impedance resistor such as 200K.

Equation 43-2. R-C Equations

V_{PEAK} = external voltage source peak voltage

f = external voltage source frequency

C = series capacitor

R = series resistor

V_C = Peak capacitor voltage

Φ = Capacitor induced zero crossing phase advance in radians

T_Φ = Time ZC event occurs before actual zero crossing

$$Z = \frac{V_{PEAK}}{3 \times 10^{-4}}$$

$$X_C = \frac{1}{2\pi f C}$$

$$R = \sqrt{Z^2 - {X_C}^2}$$

$$V_C = X_C\left(3 \times 10^{-4}\right)$$

$$\Phi = \tan^{-1}\left(\frac{X_C}{R}\right)$$

$$T_\Phi = \frac{\Phi}{2\pi f}$$

Equation 43-3. R-C Calculation Example

$$V_{rms} = 120$$

$$V_{PEAK} = V_{rms} \times \sqrt{2} = 169.7$$

$$f = 60\ Hz$$

$$C = 0.1\ \mu F$$

$$Z = \frac{V_{PEAK}}{3 \times 10^{-4}} = \frac{169.7}{3 \times 10^{-4}} = 565.7\ k\Omega$$

$$X_C = \frac{1}{2\pi f C} = \frac{1}{2\pi \times 60 \times 10^{-7}} = 26.53\ k\Omega$$

$$R = \sqrt{Z^2 - {X_C}^2} = 565.1\ k\Omega\ (computed)$$

$$R_a = 560\ k\Omega\ (used)$$

$$Z_R = \sqrt{{R_a}^2 + {X_C}^2} = 560.6\ k\Omega$$

$$I_{PEAK} = \frac{V_{PEAK}}{Z_R} = 302.7 \times 10^{-6} A$$

$$V_C = X_C \times I_{PEAK} = 8.0\ V$$

$$\Phi = \tan^{-1}\left(\frac{X_C}{R}\right) = 0.047 radians$$

$$T_\Phi = \frac{\Phi}{2\pi f} = 125.6 \mu s$$

43.5.2 Correction By Offset Current

When the waveform is varying relative to V_{SS}, then the zero cross is detected too early as the waveform falls and too late as the waveform rises. When the waveform is varying relative to V_{DD}, then the zero cross is detected too late as the waveform rises and too early as the waveform falls. The actual offset time can be determined for sinusoidal waveforms with the corresponding equations shown below.

Equation 43-4. ZCD Event Offset

When External Voltage source is relative to V_{SS}

$$T_{offset} = \frac{\sin^{-1}\left(\frac{Z_{CPINV}}{V_{PEAK}}\right)}{2\pi f}$$

When External Voltage source is relative to V_{DD}

$$T_{offset} = \frac{\sin^{-1}\left(\frac{V_{DD} - Z_{CPINV}}{V_{PEAK}}\right)}{2\pi f}$$

This offset time can be compensated for by adding a pull-up or pull-down biasing resistor to the ZCD pin. A pull-up resistor is used when the external voltage source is varying relative to V_{SS}. A pull-down resistor is used when the voltage is varying relative to V_{DD}. The resistor adds a bias to the ZCD pin so that the target external voltage source must go to zero to pull the pin voltage to the Z_{CPINV} switching voltage. The pull-up or pull-down value can be determined with the equations shown below.

Equation 43-5. ZCD Pull-up/Pull-down Resistor

When External Voltage source is relative to V_{SS}

$$R_{pullup} = \frac{R_{SERIES}\left(V_{pullup} - Z_{CPINV}\right)}{Z_{CPINV}}$$

When External Voltage source is relative to V_{DD}

$$R_{pulldown} = \frac{R_{SERIES}\left(Z_{CPINV}\right)}{\left(V_{DD} - Z_{CPINV}\right)}$$

43.6 Handling V_{PEAK} Variations

If the peak amplitude of the external voltage is expected to vary, the series resistor must be selected to keep the ZCD current source and sink below the design maximum range of ± 600 µA and above a reasonable minimum range. A general rule of thumb is that the maximum peak voltage can be no more than six times the minimum peak voltage. To ensure that the maximum current does not exceed ± 600 µA and the minimum is at least ± 100 µA, compute the series resistance as shown in Equation 43-6. The compensating pull-up for this series resistance can be determined with the equations shown in Equation 43-5 because the pull-up value is independent from the peak voltage.

Equation 43-6. Series R for V range

$$R_{SERIES} = \frac{V_{MAX_PEAK} + V_{MIN_PEAK}}{7 \times 10^{-4}}$$

43.7 Operation During Sleep

The ZCD current sources and interrupts are unaffected by Sleep.

43.8 Effects of a Reset

The ZCD circuit can be configured to default to the Active or Inactive state on Power-on Reset (POR). When the $\overline{ZCD}$ Configuration bit is cleared, the ZCD circuit will be active at POR. When the $\overline{ZCD}$ Configuration bit is set, the SEN bit must be set to enable the ZCD module.

43.9 Disabling the ZCD Module

The ZCD module can be disabled in two ways:

1. The $\overline{ZCD}$ Configuration bit disables the ZCD module when set. When this is the case then the ZCD module will be enabled by setting the SEN bit. When the $\overline{ZCD}$ bit is clear, the ZCD is always enabled and the SEN bit has no effect.
2. The ZCD can also be disabled using the ZCDMD bit of the PMDx register. This is subject to the status of the $\overline{ZCD}$ bit.

43.10 Register Summary: ZCD

Address	Name	Bit Pos.	7	6	5	4	3	2	1	0
0x00 ... 0x4B	Reserved									
0x4C	ZCDCON	7:0	SEN		OUT	POL			INTP	INTN

43.11 Register Definitions: ZCD Control

Long bit name prefixes for the ZCD peripherals are shown in the table below. Refer to the **"Long Bit Names"** section of the **"Register and Bit Naming Conventions"** chapter for more information.

Table 43-1. ZCD Long Bit Name Prefixes

Peripheral	Bit Name Prefix
ZCD	ZCD

43.11.1 ZCDCON

Name: ZCDCON
Address: 0x04C

Zero-Cross Detect Control Register

Bit	7	6	5	4	3	2	1	0
	SEN		OUT	POL			INTP	INTN
Access	R/W		R	R/W			R/W	R/W
Reset	0		x	0			0	0

Bit 7 – SEN Zero-Cross Detect Software Enable
This bit is ignored when ZCD fuse is cleared.

Value	Condition	Description
X	ZCD Config fuse = 0	Zero-cross detect is always enabled. This bit is ignored.
1	ZCD Config fuse = 1	Zero-cross detect is enabled. ZCD pin is forced to output to source and sink current.
0	ZCD Config fuse = 1	Zero-cross detect is disabled. ZCD pin operates according to PPS and TRIS controls.

Bit 5 – OUT Zero-Cross Detect Data Output

Value	Condition	Description
1	POL = 0	ZCD pin is sinking current
0	POL = 0	ZCD pin is sourcing current
1	POL = 1	ZCD pin is sourcing current
0	POL = 1	ZCD pin is sinking current

Bit 4 – POL Zero-Cross Detect Polarity

Value	Description
1	ZCD logic output is inverted
0	ZCD logic output is not inverted

Bit 1 – INTP Zero-Cross Detect Positive-Going Edge Interrupt Enable

Value	Description
1	ZCDIF bit is set on low-to-high ZCD_output transition
0	ZCDIF bit is unaffected by low-to-high ZCD_output transition

Bit 0 – INTN Zero-Cross Detect Negative-Going Edge Interrupt Enable

Value	Description
1	ZCDIF bit is set on high-to-low ZCD_output transition
0	ZCDIF bit is unaffected by high-to-low ZCD_output transition

44. Instruction Set Summary

The PIC18 devices incorporate the standard set of PIC18 core instructions, as well as an extended set of instructions to optimize code that is recursive or that utilizes a software stack. The extended set is discussed later in this section.

44.1 Standard Instruction Set

The standard PIC18 instruction set adds many enhancements to the previous PIC® MCU instruction sets, while maintaining an easy migration from these PIC MCU instruction sets. Most instructions are a single program memory word (16 bits), but there are a few instructions that require two- or three-program memory locations.

Each single-word instruction is a 16-bit word divided into an opcode that specifies the instruction type and one or more operands, which further specifies the operation of the instruction.

The instruction set is highly orthogonal and is grouped into four basic categories:

- Byte-oriented operations
- Bit-oriented operations
- Literal operations
- Control operations

The PIC18 instruction set summary in Table 44-2 lists byte-oriented, bit-oriented, literal and control operations. Table 44-1 shows the opcode field descriptions.

Most byte-oriented instructions have three operands:

1. The file register (specified by ‘f’)
2. The destination of the result (specified by ‘d’)
3. The accessed memory (specified by ‘a’)

The file register designator ‘f’ specifies which file register is to be used by the instruction. The destination designator ‘d’ specifies where the result of the operation is to be placed. If ‘d’ is zero, the result is placed in the WREG register. If ‘d’ is one, the result is placed in the file register specified in the instruction.

All bit-oriented instructions have three operands:

1. The file register (specified by ‘f’)
2. The bit in the file register (specified by ‘b’)
3. The accessed memory (specified by ‘a’)

The bit field designator ‘b’ selects the number of the bit affected by the operation, while the file register designator ‘f’ represents the number of the file in which the bit is located.

The literal instructions may use some of the following operands:

- A literal value to be loaded into a file register (specified by ‘k’)
- The desired FSR register to load the literal value into (specified by ‘f’)
- No operand required (specified by ‘—’)

The control instructions may use some of the following operands:

- A program memory address (specified by ‘n’)
- The mode of the CALL or RETURN instructions (specified by ‘s’)
- The mode of the table read and table write instructions (specified by ‘m’)
- No operand required (specified by ‘—’)

All instructions are a single word, except for a few two- or three-word instructions. These instructions were made two- or three-word to contain the required information in 32 or 48 bits. In the second and third words, the four MSbs are ‘1’s. If this second or third word is executed as an instruction (by itself), it will execute as a NOP.

All single-word instructions are executed in a single instruction cycle, unless a conditional test is true or the Program Counter is changed as a result of the instruction. In these cases, the execution takes two instruction cycles, with the additional instruction cycle(s) executed as a NOP.

The two-word instructions execute in two instruction cycles and three-word instructions execute in three instruction cycles.

One instruction cycle consists of four oscillator periods. Thus, for an oscillator frequency of 4 MHz, the normal instruction execution time is 1 µs. If a conditional test is true, or the Program Counter is changed as a result of an instruction, the instruction execution time is 2 µs. Two-word branch instructions (if true) would take 3 µs.

Figure 44-1, Figure 44-2 and Figure 44-3 show the general formats that the instructions can have. All examples use the convention 'nnh' to represent a hexadecimal number.

The Instruction Set Summary, shown in Table 44-2, lists the standard instructions recognized by the Microchip MPASM™ Assembler.

Standard Instruction Set provides a description of each instruction.

Table 44-1. Opcode Field Descriptions

Field	Description
a	RAM access bit a = 0: RAM location in Access RAM (BSR register is ignored) a = 1: RAM bank is specified by BSR register (default)
ACCESS	ACCESS = 0: RAM access bit symbol
BANKED	BANKED = 1: RAM access bit symbol
bbb	Bit address within an 8-bit file register (0 to 7)
BSR	Bank Select Register (BSR). Used to select the current RAM bank.
d	Destination select bit d = 0: store result in WREG d = 1: store result in file register f (default)
dest	Destination: either the WREG register or the specified register file location
f	8-bit register file address (00h to FFh)
f_n	FSR Number (0 to 2)
f_s	12-bit register file address (000h to FFFh) or 14-bit register file address (0000h to 3FFFh). This is the source address.
f_d	12-bit register file address (000h to FFFh) or 14-bit register file address (0000h to 3FFFh). This is the destination address.
z_s	7-bit literal offset for FSR2 to used as register file address (000h to FFFh). This is the source address.
z_d	7-bit literal offset for FSR2 to used as register file address (000h to FFFh). This is the destination address.
k	Literal field, constant data or label (may be either a 6-bit, 8-bit, 12-bit or a 20-bit value)
label	Label name
mm * *+ *- +*	The mode of the TBLPTR register for the table read and table write instructions. Only used with table read and table write instructions: No change to register (such as TBLPTR with table reads and writes) Post-Increment register (such as TBLPTR with table reads and writes) Post-Decrement register (such as TBLPTR with table reads and writes) Pre-Increment register (such as TBLPTR with table reads and writes)

.....continued

Field	Description
n	The relative address (2's complement number) for relative branch instructions, or the direct address for call/branch and return instructions.
PRODH	Product of multiply high byte
PRODL	Product of multiply low byte
s	Fast Call/Return mode select bit s = 0: do not update into/from shadow registers (default) s = 1: certain registers loaded into/from shadow registers (Fast mode)
u	Unused or unchanged
W	W = 0: Destination select bit symbol
WREG	Working register (accumulator)
x	Don't care ('0' or '1'). The assembler will generate code with x = 0. It is the recommended form of use for compatibility with all Microchip software tools.
TBLPTR	21-bit Table Pointer (points to a program memory location)
TABLAT	8-bit table latch
TOS	Top-of-stack (TOS)
PC	Program Counter
PCL	Program Counter low byte
PCH	Program Counter high byte
PCLATH	Program Counter high byte latch
PCLATU	Program Counter upper byte Latch
GIE	Global Interrupt Enable bit
WDT	Watchdog Timer
$\overline{TO}$	Time-Out bit
$\overline{PD}$	Power-Down bit
C, DC, Z, OV, N	ALU Status bits: Carry, Digit Carry, Zero, Overflow, Negative
{ }	Optional argument
[ ]	Indexed address
( )	Contents
< >	Register bit field
[expr]<n>	Specifies bit n of the register indicated by pointer expr
→	Assigned to
∈	In the set of
italics	User defined term (font is Courier)

Figure 44-1. General Format for Byte-oriented Instructions

Byte-oriented file register operations

Example Instruction

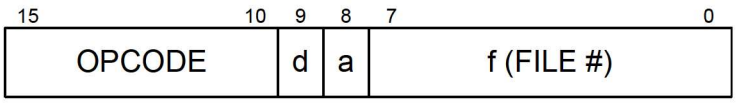


```
ADDWF MYREG, W, B
```

d = 0 for result destination to be WREG register
d = 1 for result destination to be file register (f)
a = 0 to force Access Bank
a = 1 for BSR to select bank
f = 8-bit file register address

Byte to Byte move operations (2-word)

Example Instruction

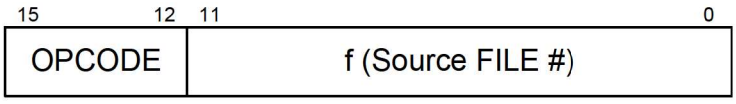

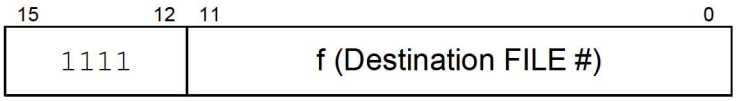


```
MOVFF MYREG1, MYREG2
```

f = 12-bit file register address

Byte to Byte move operations (3-word)

Example Instruction

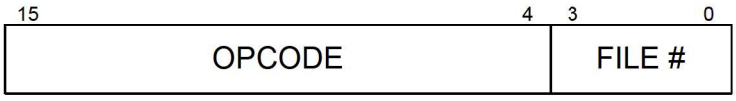

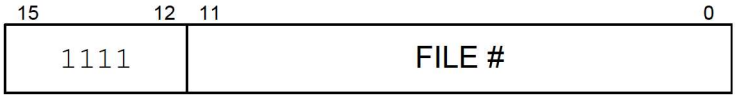

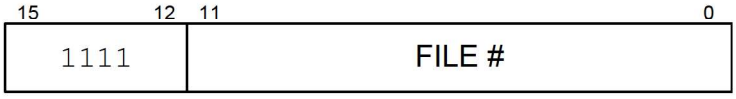


```
MOVFFL MYREG1, MYREG2
```

Figure 44-2. General Format for Bit-oriented and Literal Instructions

Bit-oriented file register operations — **Example Instruction**

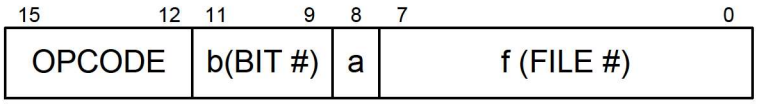


```
BSF MYREG, bit, B
```

b = 3-bit position of bit in file register (f)
a = 0 to force Access Bank
a = 1 for BSR to select bank
f = 8-bit file register address

Literal operations — **Example Instruction**

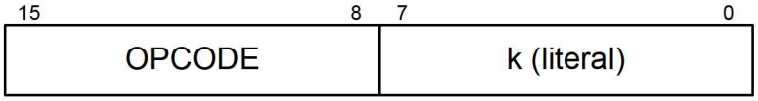


```
MOVLW 7Fh
```

k = 8-bit immediate value

Figure 44-3. General Format for Control Instructions

Control operations
CALL, GOTO and Branch operations

Example Instruction

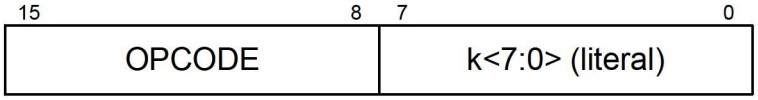


```
GOTO Label
```

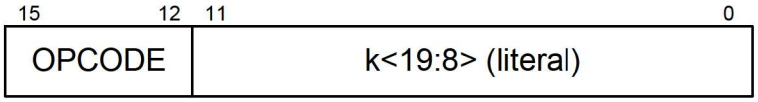

k = 20-bit immediate value

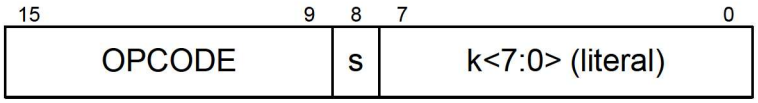


```
CALL MYFUNC
```

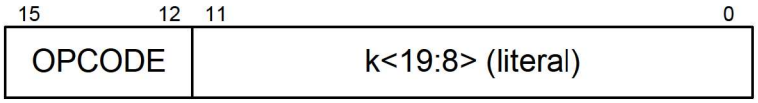

k = 20-bit immediate value
s = Fast bit

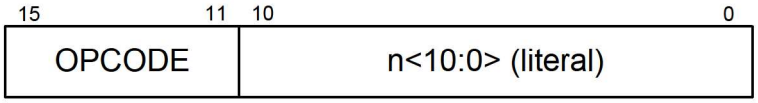


```
BRA MYFUNC
```

n = 11-bit immediate value

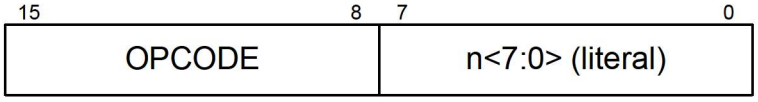


```
BC MYFUNC
```

n = 8-bit immediate value

Table 44-2. Standard Instruction Set

Mnemonic, Operands		Description	Cycles	16-Bit Instruction Word				Status Affected	Notes
				MSb			LSb		
BYTE-ORIENTED FILE REGISTER INSTRUCTIONS									
ADDWF	f, d, a	Add WREG and f	1	0010	01da	ffff	ffff	C, DC, Z, OV, N	1
ADDWFC	f, d, a	Add WREG and Carry bit to f	1	0010	00da	ffff	ffff	C, DC, Z, OV, N	1
ANDWF	f, d, a	AND WREG with f	1	0001	01da	ffff	ffff	Z, N	1
CLRF	f, a	Clear f	1	0110	101a	ffff	ffff	Z	
COMF	f, d, a	Complement f	1	0001	11da	ffff	ffff	Z, N	1
DECF	f, d, a	Decrement f	1	0000	01da	ffff	ffff	C, DC, Z, OV, N	1
INCF	f, d, a	Increment f	1	0010	10da	ffff	ffff	C, DC, Z, OV, N	1
IORWF	f, d, a	Inclusive OR WREG with f	1	0001	00da	ffff	ffff	Z, N	1
MOVF	f, d, a	Move f to WREG or f	1	0101	00da	ffff	ffff	Z, N	1
MOVFF	f_s, f_d	Move f_s (12-bit source) to f_d (12-bit destination)	2	1100	$f_sf_sf_sf_s$	$f_sf_sf_sf_s$	$f_sf_sf_sf_s$	None	1, 3, 4
				1111	$f_df_df_df_d$	$f_df_df_df_d$	$f_df_df_df_d$		
MOVFFL	f_s, f_d	Move f_s (14-bit source) to f_d (14-bit destination)	3	0000	0000	0110	$f_sf_sf_sf_s$	None	1, 3
				1111	$f_sf_sf_sf_s$	$f_sf_sf_sf_s$	$f_sf_sf_df_d$		
				1111	$f_df_df_df_d$	$f_df_df_df_d$	$f_df_df_df_d$		
MOVWF	f, a	Move WREG to f	1	0110	111a	ffff	ffff	None	
MULWF	f, a	Multiply WREG with f	1	0000	001a	ffff	ffff	None	1
NEGF	f, a	Negate f	1	0110	110a	ffff	ffff	C, DC, Z, OV, N	1
RLCF	f, d, a	Rotate Left f through Carry	1	0011	01da	ffff	ffff	C, Z, N	1
RLNCF	f, d, a	Rotate Left f (No Carry)	1	0100	01da	ffff	ffff	Z, N	1
RRCF	f, d, a	Rotate Right f through Carry	1	0011	00da	ffff	ffff	C, Z, N	1
RRNCF	f, d, a	Rotate Right f (No Carry)	1	0100	00da	ffff	ffff	Z, N	1
SETF	f, a	Set f	1	0110	100a	ffff	ffff	None	

© 2020 Microchip Technology Inc.

.....continued

Mnemonic, Operands		Description	Cycles	16-Bit Instruction Word				Status Affected	Notes
				MSb			LSb		
SUBFWB	f, d, a	Subtract f from WREG with borrow	1	0101	01da	ffff	ffff	C, DC, Z, OV, N	1
SUBWF	f, d, a	Subtract WREG from f	1	0101	11da	ffff	ffff	C, DC, Z, OV, N	1
SUBWFB	f, d, a	Subtract WREG from f with borrow	1	0101	10da	ffff	ffff	C, DC, Z, OV, N	1
SWAPF	f, d, a	Swap nibbles in f	1	0011	10da	ffff	ffff	None	1
XORWF	f, d, a	Exclusive OR WREG with f	1	0001	10da	ffff	ffff	Z, N	1
BYTE-ORIENTED SKIP INSTRUCTIONS									
CPFSEQ	f, a	Compare f with WREG, skip if =	1 – 4	0110	001a	ffff	ffff	None	1, 2
CPFSGT	f, a	Compare f with WREG, skip if >	1 – 4	0110	010a	ffff	ffff	None	1, 2
CPFSLT	f, a	Compare f with WREG, skip if <	1 – 4	0110	000a	ffff	ffff	None	1, 2
DECFSZ	f, d, a	Decrement f, Skip if 0	1 – 4	0010	11da	ffff	ffff	None	1, 2
DCFSNZ	f, d, a	Decrement f, Skip if Not 0	1 – 4	0100	11da	ffff	ffff	None	1, 2
INCFSZ	f, d, a	Increment f, Skip if 0	1 – 4	0011	11da	ffff	ffff	None	1, 2
INFSNZ	f, d, a	Increment f, Skip if Not 0	1 – 4	0100	10da	ffff	ffff	None	1, 2
TSTFSZ	f, a	Test f, skip if 0	1 – 4	0110	011a	ffff	ffff	None	1, 2
BIT-ORIENTED FILE REGISTER INSTRUCTIONS									
BCF	f, b, a	Bit Clear f	1	1001	bbba	ffff	ffff	None	1
BSF	f, b, a	Bit Set f	1	1000	bbba	ffff	ffff	None	1
BTG	f, b, a	Bit Toggle f	1	0111	bbba	ffff	ffff	None	1
BIT-ORIENTED SKIP INSTRUCTIONS									
BTFSC	f, b, a	Bit Test f, Skip if Clear	1 – 4	1011	bbba	ffff	ffff	None	1, 2

© 2020 Microchip Technology Inc.

.....continued

Mnemonic, Operands		Description	Cycles	16-Bit Instruction Word				Status Affected	Notes
				MSb			LSb		
BTFSS	f, b, a	Bit Test f, Skip if Set	1 – 4	1010	bbba	ffff	ffff	None	1, 2
CONTROL INSTRUCTIONS									
BC	n	Branch if Carry	1 – 2	1110	0010	nnnn	nnnn	None	2
BN	n	Branch if Negative	1 – 2	1110	0110	nnnn	nnnn	None	2
BNC	n	Branch if Not Carry	1 – 2	1110	0011	nnnn	nnnn	None	2
BNN	n	Branch if Not Negative	1 – 2	1110	0111	nnnn	nnnn	None	2
BNOV	n	Branch if Not Overflow	1 – 2	1110	0101	nnnn	nnnn	None	2
BNZ	n	Branch if Not Zero	1 – 2	1110	0001	nnnn	nnnn	None	2
BOV	n	Branch if Overflow	1 – 2	1110	0100	nnnn	nnnn	None	2
BRA	n	Branch Unconditionally	2	1101	0nnn	nnnn	nnnn	None	2
BZ	n	Branch if Zero	1 – 2	1110	0000	nnnn	nnnn	None	2
CALL	k, s	Call subroutine	2	1110	110s	kkkk	kkkk	None	2, 3
				1111	kkkk	kkkk	kkkk		
CALLW	—	Call subroutine using WREG	2	0000	0000	0001	0100	None	2
GOTO	k	Go to address	2	1110	1111	kkkk	kkkk	None	3
				1111	kkkk	kkkk	kkkk		
RCALL	n	Relative Call	2	1101	1nnn	nnnn	nnnn	None	2
RETFIE	s	Return from interrupt enable	2	0000	0000	0001	000s	INTCONx STAT bits	2
RETLW	k	Return with literal in WREG	2	0000	1100	kkkk	kkkk	None	2
RETURN	s	Return from Subroutine	2	0000	0000	0001	001s	None	2
INHERENT INSTRUCTIONS									
CLRWDT	—	Clear Watchdog Timer	1	0000	0000	0000	0100	$\overline{TO}$, $\overline{PD}$	

.....continued

Mnemonic, Operands		Description	Cycles	16-Bit Instruction Word				Status Affected	Notes
				MSb			LSb		
DAW	—	Decimal Adjust WREG	1	0000	0000	0000	0111	C	
NOP	—	No Operation	1	0000	0000	0000	0000	None	
NOP	—	No Operation	1	1111	xxxx	xxxx	xxxx	None	3
POP	—	Pop top of return stack (TOS)	1	0000	0000	0000	0110	None	
PUSH	—	Push top of return stack (TOS)	1	0000	0000	0000	0101	None	
RESET	—	Software device Reset	1	0000	0000	1111	1111	All	
SLEEP	—	Go into Standby mode	1	0000	0000	0000	0011	$\overline{TO}$, $\overline{PD}$	
LITERAL INSTRUCTIONS									
ADDFSR	f_n, k	Add FSR (f_n) with literal (k)	1	1110	1000	$f_nf_n$kk	kkkk	None	
ADDLW	k	Add literal and WREG	1	0000	1111	kkkk	kkkk	C, DC, Z, OV, N	
ANDLW	k	AND literal with WREG	1	0000	1011	kkkk	kkkk	Z, N	
IORLW	k	Inclusive OR literal with WREG	1	0000	1001	kkkk	kkkk	Z, N	
LFSR	f_n, k	Load FSR(f_n) with a 14-bit literal (k)	2	1110	1110	00f_nf_n	kkkk	None	3
				1111	00kk	kkkk	kkkk		
MOVLB	k	Move literal to BSR<5:0>	1	0000	0001	00kk	kkkk	None	
MOVLW	k	Move literal to WREG	1	0000	1110	kkkk	kkkk	None	
MULLW	k	Multiply literal with WREG	1	0000	1101	kkkk	kkkk	None	
RETLW	k	Return with literal in WREG	2	0000	1100	kkkk	kkkk	None	
SUBFSR	f_n, k	Subtract literal (k) from FSR (f_n)	1	1110	1001	$f_nf_n$kk	kkkk	None	
SUBLW	k	Subtract WREG from literal	1	0000	1000	kkkk	kkkk	C, DC, Z, OV, N	

© 2020 Microchip Technology Inc.

.....continued

Mnemonic, Operands		Description	Cycles	16-Bit Instruction Word				Status Affected	Notes
				MSb			LSb		
XORLW	k	Exclusive OR literal with WREG	1	0000	1010	kkkk	kkkk	Z, N	
DATA MEMORY – PROGRAM MEMORY INSTRUCTIONS									
TBLRD*	—	Table Read	2	0000	0000	0000	1000	None	
TBLRD*+	—	Table Read with post-increment	2	0000	0000	0000	1001	None	
TBLRD*-	—	Table Read with post-decrement	2	0000	0000	0000	1010	None	
TBLRD+*	—	Table Read with pre-increment	2	0000	0000	0000	1011	None	
TBLWT*	—	Table Write	2	0000	0000	0000	1100	None	
TBLWT*+	—	Table Write with post-increment	2	0000	0000	0000	1101	None	
TBLWT*-	—	Table Write with post-decrement	2	0000	0000	0000	1110	None	
TBLWT+*	—	Table Write with pre-increment	2	0000	0000	0000	1111	None	

Notes:

1. When a PORT register is modified as a function of itself (e.g., `MOVF PORTB, 1, 0`), the value used will be that value present on the pins themselves. For example, if the data latch is '1' for a pin configured as input and is driven low by an external device, the data will be written back with a '0'.
2. If Program Counter (PC) is modified or a conditional test is true, the instruction requires two cycles. The second cycle is executed as a `NOP`.
3. Some instructions are multi-word instructions. The extra words of these instructions will be executed as a `NOP` unless the first word of the instruction retrieves the information embedded in these 16 bits. This ensures that all program memory locations have a valid instruction.
4. f_s and f_d do not cover the full memory range. 2 MSbs of bank selection are forced to `0b00` to limit the range of these instructions to the lower 4k addressing space.

© 2020 Microchip Technology Inc.

44.1.1 Standard Instruction Set

Important: All PIC18 instructions may take an optional label argument preceding the instruction mnemonic for use in symbolic addressing. If a label is used, the instruction format then becomes: `{label} instruction argument(s)`

ADDFSR	ADD Literal to FSR			
Syntax	`ADDFSR fn, k`			
Operands	$0 \le k \le 63$ $f_n \in [0, 1, 2]$			
Operation	$(FSRf_n) + k \rightarrow FSRf_n$			
Status Affected	None			
Encoding	1110	1000	f_nf_nkk	kkkk
Description	The 6-bit literal 'k' is added to the contents of the FSR specified by 'f_n'.			
Words	1			
Cycles	1			

Q Cycle Activity:

Q1	Q2	Q3	Q4
Decode	Read literal 'k'	Process Data	Write to FSR

Example: `ADDFSR 2, 23h`

Before Instruction
FSR2 = 03FFh

After Instruction
FSR2 = 0422h

ADDLW	ADD Literal to W			
Syntax	`ADDLW k`			
Operands	$0 \le k \le 255$			
Operation	$(W) + k \rightarrow W$			
Status Affected	N, OV, C, DC, Z			
Encoding	0000	1111	kkkk	kkkk
Description	The contents of W are added to the 8-bit literal 'k' and the result is placed in W.			
Words	1			
Cycles	1			

Q Cycle Activity:

Q1	Q2	Q3	Q4

Decode	Read literal 'k'	Process Data	Write to W

Example: `ADDLW 15h`

Before Instruction
W = `10h`

After Instruction
W = `25h`

ADDWF	ADD W to f			
Syntax	`ADDWF f {,d {,a}}`			
Operands	0 ≤ f ≤ 255 d ∈ [0, 1] a ∈ [0, 1]			
Operation	(W) + (f) → dest			
Status Affected	N, OV, C, DC, Z			
Encoding	0010	01da	ffff	ffff
Description	Add W to register 'f'. If 'd' is '0', the result is stored in W. If 'd' is '1', the result is stored back in register 'f' (default). If 'a' is '0', the Access Bank is selected. If 'a' is '1', the BSR is used to select the GPR bank. If 'a' is '0' and the extended instruction set is enabled, this instruction operates in Indexed Literal Offset Addressing mode whenever f ≤ 95 (5Fh). See Byte-Oriented and Bit-Oriented Instructions in Indexed Literal Offset Mode for details.			
Words	1			
Cycles	1			

Q Cycle Activity:

Q1	Q2	Q3	Q4
Decode	Read register 'f'	Process Data	Write to destination

Example: `ADDWF REG, 0, 0`

Before Instruction
W = `17h`
REG = `0C2h`

After Instruction
W = `0D9h`
REG = `0C2h`

ADDWFC	ADD W and CARRY bit to f
Syntax	`ADDWFC f {,d {,a}}`
Operands	0 ≤ f ≤ 255 d ∈ [0, 1] a ∈ [0, 1]

.....continued				
ADDWFC	**ADD W and CARRY bit to f**			
Syntax	`ADDWFC f {,d {,a}}`			
Operation	(W) + (f) + (C) → dest			
Status Affected	N, OV, C, DC, Z			
Encoding	0010	00da	ffff	ffff
Description	Add W, the CARRY flag and data memory location 'f'. If 'd' is '0', the result is stored in W. If 'd' is '1', the result is placed in data memory location 'f'. If 'a' is '0', the Access Bank is selected. If 'a' is '1', the BSR is used to select the GPR bank. If 'a' is '0' and the extended instruction set is enabled, this instruction operates in Indexed Literal Offset Addressing mode whenever f ≤ 95 (5Fh). See Byte-Oriented and Bit-Oriented Instructions in Indexed Literal Offset Mode for details.			
Words	1			
Cycles	1			

Q Cycle Activity:

Q1	Q2	Q3	Q4
Decode	Read register 'f'	Process Data	Write to destination

Example: `ADDWFC REG, 0, 1`

Before Instruction
CARRY bit = 1
REG = 02h
W = 4Dh

After Instruction
CARRY bit = 0
REG = 02h
W = 50h

ANDLW	**AND literal with W**			
Syntax	`ANDLW k`			
Operands	0 ≤ k ≤ 255			
Operation	(W) .AND. k → W			
Status Affected	N, Z			
Encoding	0000	1011	kkkk	kkkk
Description	The contents of W are AND'ed with the 8-bit literal 'k'. The result is placed in W.			
Words	1			
Cycles	1			

Q Cycle Activity:

Q1	Q2	Q3	Q4

Decode	Read literal 'k'	Process Data	Write to W

Example: `ANDLW 05Fh`

Before Instruction
W = `A3h`

After Instruction
W = `03h`

ANDWF	AND W with f			
Syntax	`ANDWF f {,d {,a}}`			
Operands	0 ≤ f ≤ 255 d ∈ [0, 1] a ∈ [0, 1]			
Operation	(W) .AND. (f) → dest			
Status Affected	N, Z			
Encoding	0001	01da	ffff	ffff
Description	The contents of W are AND'ed with register 'f'. If 'd' is '0', the result is stored in W. If 'd' is '1', the result is stored back in register 'f' (default). If 'a' is '0', the Access Bank is selected. If 'a' is '1', the BSR is used to select the GPR bank. If 'a' is '0' and the extended instruction set is enabled, this instruction operates in Indexed Literal Offset Addressing mode whenever f ≤ 95 (5Fh). See Byte-Oriented and Bit-Oriented Instructions in Indexed Literal Offset Mode for details.			
Words	1			
Cycles	1			

Q Cycle Activity:

Q1	Q2	Q3	Q4
Decode	Read register 'f'	Process Data	Write to destination

Example: `ANDWF REG, 0, 0`

Before Instruction
W = `17h`
REG = `C2h`

After Instruction
W = `02h`
REG = `C2h`

BC	Branch if Carry
Syntax	`BC n`
Operands	-128 ≤ n ≤ 127

.....continued				
BC	**Branch if Carry**			
Syntax	`BC n`			
Operation	If CARRY bit is '1' (PC) + 2 + 2n → PC			
Status Affected	None			
Encoding	1110	0010	nnnn	nnnn
Description	If the CARRY bit is '1', then the program will branch. The 2's complement number '2n' is added to the PC. Since the PC will have incremented to fetch the next instruction, the new address will be PC + 2 + 2n. This instruction is then a 2-cycle instruction.			
Words	1			
Cycles	1 (2)			

Q Cycle Activity:

If Jump:

Q1	Q2	Q3	Q4
Decode	Read literal 'n'	Process Data	Write to PC
No operation	No operation	No operation	No operation

If No Jump:

Q1	Q2	Q3	Q4
Decode	Read literal 'n'	Process Data	No operation

Example: `HERE BC 5`

Before Instruction
PC = address `(HERE)`

After Instruction
If CARRY = `1`; PC = address `(HERE + 12)`
If CARRY = `0`; PC = address `(HERE + 2)`

BCF	**Bit Clear f**			
Syntax	`BCF f, b {,a}`			
Operands	0 ≤ f ≤ 255 0 ≤ b ≤ 7 a ∈ [0, 1]			
Operation	0 → f<b>			
Status Affected	None			
Encoding	1001	bbba	ffff	ffff

.....continued	
BCF	**Bit Clear f**
Syntax	`BCF f, b {,a}`
Description	Bit 'b' in register 'f' is cleared. If 'a' is '0', the Access Bank is selected. If 'a' is '1', the BSR is used to select the GPR bank. If 'a' is '0' and the extended instruction set is enabled, this instruction operates in Indexed Literal Offset Addressing mode whenever f ≤ 95 (5Fh). See Byte-Oriented and Bit-Oriented Instructions in Indexed Literal Offset Mode for details.
Words	1
Cycles	1

Q Cycle Activity:

Q1	Q2	Q3	Q4
Decode	Read register 'f'	Process Data	Write register 'f'

Example: `BCF FLAG_REG, 7, 0`

Before Instruction
FLAG_REG = C7h

After Instruction
FLAG_REG = 47h

BN	**Branch if Negative**			
Syntax	`BN n`			
Operands	-128 ≤ n ≤ 127			
Operation	If NEGATIVE bit is '1' (PC) + 2 + 2n → PC			
Status Affected	None			
Encoding	1110	0110	nnnn	nnnn
Description	If the NEGATIVE bit is '1', then the program will branch. The 2's complement number '2n' is added to the PC. Since the PC will have incremented to fetch the next instruction, the new address will be PC + 2 + 2n. This instruction is then a 2-cycle instruction.			
Words	1			
Cycles	1 (2)			

Q Cycle Activity:

If Jump:

Q1	Q2	Q3	Q4
Decode	Read literal 'n'	Process Data	Write to PC
No operation	No operation	No operation	No operation

If No Jump:

Q1	Q2	Q3	Q4
Decode	Read literal 'n'	Process Data	No operation

Example: `HERE BN Jump`

Before Instruction
PC = address `(HERE)`

After Instruction
If NEGATIVE = `1`; PC = address `(Jump)`
If NEGATIVE = `0`; PC = address `(HERE + 2)`

BNC	Branch if Not Carry			
Syntax	`BNC n`			
Operands	-128 ≤ n ≤ 127			
Operation	If CARRY bit is '0' (PC) + 2 + 2n → PC			
Status Affected	None			
Encoding	1110	0011	nnnn	nnnn
Description	If the CARRY bit is '0', then the program will branch. The 2's complement number '2n' is added to the PC. Since the PC will have incremented to fetch the next instruction, the new address will be PC + 2 + 2n. This instruction is then a 2-cycle instruction.			
Words	1			
Cycles	1 (2)			

Q Cycle Activity:

If Jump:

Q1	Q2	Q3	Q4
Decode	Read literal 'n'	Process Data	Write to PC
No operation	No operation	No operation	No operation

If No Jump:

Q1	Q2	Q3	Q4
Decode	Read literal 'n'	Process Data	No operation

Example: `HERE BNC Jump`

Before Instruction
PC = address `(HERE)`

After Instruction
If CARRY = `0`; PC = address `(Jump)`
If CARRY = `1`; PC = address `(HERE + 2)`

BNN	Branch if Not Negative			
Syntax	**BNN n**			
Operands	-128 ≤ n ≤ 127			
Operation	If NEGATIVE bit is '0' (PC) + 2 + 2n → PC			
Status Affected	None			
Encoding	1110	0111	nnnn	nnnn
Description	If the NEGATIVE bit is '0', then the program will branch. The 2's complement number '2n' is added to the PC. Since the PC will have incremented to fetch the next instruction, the new address will be PC + 2 + 2n. This instruction is then a 2-cycle instruction.			
Words	1			
Cycles	1 (2)			

Q Cycle Activity:

If Jump:

Q1	Q2	Q3	Q4
Decode	Read literal 'n'	Process Data	Write to PC
No operation	No operation	No operation	No operation

If No Jump:

Q1	Q2	Q3	Q4
Decode	Read literal 'n'	Process Data	No operation

Example: `HERE BNN Jump`

Before Instruction
PC = address `(HERE)`

After Instruction
If NEGATIVE = `0`; PC = address `(Jump)`
If NEGATIVE = `1`; PC = address `(HERE + 2)`

BNOV	Branch if Not Overflow			
Syntax	**BNOV n**			
Operands	-128 ≤ n ≤ 127			
Operation	If OVERFLOW bit is '0' (PC) + 2 + 2n → PC			
Status Affected	None			
Encoding	1110	0101	nnnn	nnnn
Description	If the OVERFLOW bit is '0', then the program will branch. The 2's complement number '2n' is added to the PC. Since the PC will have incremented to fetch the next instruction, the new address will be PC + 2 + 2n. This instruction is then a 2-cycle instruction.			

.....continued	
BNOV	**Branch if Not Overflow**
Syntax	`BNOV n`
Words	1
Cycles	1 (2)

Q Cycle Activity:

If Jump:

Q1	Q2	Q3	Q4
Decode	Read literal 'n'	Process Data	Write to PC
No operation	No operation	No operation	No operation

If No Jump:

Q1	Q2	Q3	Q4
Decode	Read literal 'n'	Process Data	No operation

Example: `HERE BNOV Jump`

Before Instruction
PC = address `(HERE)`

After Instruction
If OVERFLOW = `0`; PC = address `(Jump)`
If OVERFLOW = `1`; PC = address `(HERE + 2)`

BNZ	**Branch if Not Zero**			
Syntax	`BNZ n`			
Operands	-128 ≤ n ≤ 127			
Operation	If ZERO bit is '0' (PC) + 2 + 2n → PC			
Status Affected	None			
Encoding	1110	0001	nnnn	nnnn
Description	If the ZERO bit is '0', then the program will branch. The 2's complement number '2n' is added to the PC. Since the PC will have incremented to fetch the next instruction, the new address will be PC + 2 + 2n. This instruction is then a 2-cycle instruction.			
Words	1			
Cycles	1 (2)			

Q Cycle Activity:

If Jump:

Q1	Q2	Q3	Q4
Decode	Read literal 'n'	Process Data	Write to PC

No operation	No operation	No operation	No operation

If No Jump:

Q1	Q2	Q3	Q4
Decode	Read literal 'n'	Process Data	No operation

Example: `HERE BNZ Jump`

Before Instruction
PC = address `(HERE)`

After Instruction
If ZERO = `0`; PC = address `(Jump)`
If ZERO = `1`; PC = address `(HERE + 2)`

BOV	Branch if Overflow			
Syntax	`BOV n`			
Operands	-128 ≤ n ≤ 127			
Operation	If OVERFLOW bit is '1' (PC) + 2 + 2n → PC			
Status Affected	None			
Encoding	1110	0100	nnnn	nnnn
Description	If the OVERFLOW bit is '1', then the program will branch. The 2's complement number '2n' is added to the PC. Since the PC will have incremented to fetch the next instruction, the new address will be PC + 2 + 2n. This instruction is then a 2-cycle instruction.			
Words	1			
Cycles	1 (2)			

Q Cycle Activity:

If Jump:

Q1	Q2	Q3	Q4
Decode	Read literal 'n'	Process Data	Write to PC
No operation	No operation	No operation	No operation

If No Jump:

Q1	Q2	Q3	Q4
Decode	Read literal 'n'	Process Data	No operation

Example: `HERE BOV Jump`

Before Instruction
PC = address `(HERE)`

After Instruction
If OVERFLOW = 1; PC = address (Jump)
If OVERFLOW = 0; PC = address (HERE + 2)

BRA	Unconditional Branch			
Syntax	**BRA n**			
Operands	-1024 ≤ n ≤ 1023			
Operation	(PC) + 2 + 2n → PC			
Status Affected	None			
Encoding	1101	0nnn	nnnn	nnnn
Description	The 2's complement number '2n' is added to the PC. Since the PC will have incremented to fetch the next instruction, the new address will be PC + 2 + 2n. This instruction is a 2-cycle instruction.			
Words	1			
Cycles	2			

Q Cycle Activity:

Q1	Q2	Q3	Q4
Decode	Read literal 'n'	Process Data	Write to PC
No operation	No operation	No operation	No operation

Example: HERE BRA Jump

Before Instruction
PC = address (HERE)

After Instruction
PC = address (Jump)

BSF	Bit Set f			
Syntax	**BSF f, b {,a}**			
Operands	0 ≤ f ≤ 255 0 ≤ b ≤ 7 a ∈ [0, 1]			
Operation	1 → f<b>			
Status Affected	None			
Encoding	1000	bbba	ffff	ffff
Description	Bit 'b' in register 'f' is set. If 'a' is '0', the Access Bank is selected. If 'a' is '1', the BSR is used to select the GPR bank. If 'a' is '0' and the extended instruction set is enabled, this instruction operates in Indexed Literal Offset Addressing mode whenever f ≤ 95 (5Fh). See Byte-Oriented and Bit-Oriented Instructions in Indexed Literal Offset Mode for details.			
Words	1			

.....continued	
BSF	**Bit Set f**
Syntax	`BSF f, b {,a}`
Cycles	1

Q Cycle Activity:

Q1	Q2	Q3	Q4
Decode	Read register 'f'	Process Data	Write register 'f'

Example: `BSF FLAG_REG, 7, 1`

Before Instruction
FLAG_REG = `0Ah`

After Instruction
FLAG_REG = `8Ah`

BTFSC	**Bit Test File, Skip if Clear**			
Syntax	`BTFSC f, b {,a}`			
Operands	0 ≤ f ≤ 255 0 ≤ b ≤ 7 a ∈ [0, 1]			
Operation	Skip if (f<b>) = `0`			
Status Affected	None			
Encoding	`1011`	`bbba`	`ffff`	`ffff`
Description	If bit 'b' in register 'f' is '`0`', then the next instruction is skipped. If bit 'b' is '`0`', then the next instruction fetched during the current instruction execution is discarded and a `NOP` is executed instead, making this a 2-cycle instruction. If 'a' is '`0`', the Access Bank is selected. If 'a' is '`1`', the BSR is used to select the GPR bank. If 'a' is '`0`' and the extended instruction set is enabled, this instruction operates in Indexed Literal Offset Addressing mode whenever f ≤ `95` (`5Fh`). See Byte-Oriented and Bit-Oriented Instructions in Indexed Literal Offset Mode for details.			
Words	1			
Cycles	1 (2) **Note:** 3 cycles if skip and followed by a 2-word instruction. 4 cycles if skip and followed by a 3-word instruction.			

Q Cycle Activity:

If no skip:

Q1	Q2	Q3	Q4
Decode	Read register 'f'	Process Data	No operation

If skip:

Q1	Q2	Q3	Q4
Decode	Read register 'f'	Process Data	No operation
No operation	No operation	No operation	No operation

If skip and followed by 2-word instruction:

Q1	Q2	Q3	Q4
Decode	Read register 'f'	Process Data	No operation
No operation	No operation	No operation	No operation
No operation	No operation	No operation	No operation

If skip and followed by 3-word instruction:

Q1	Q2	Q3	Q4
Decode	Read register 'f'	Process Data	No operation
No operation	No operation	No operation	No operation
No operation	No operation	No operation	No operation
No operation	No operation	No operation	No operation

Example:

```
HERE   BTFSC   FLAG, 1, 0
FALSE:
TRUE:
```

Before Instruction
PC = address (HERE)

After Instruction
If FLAG<1> = 0; PC = address (TRUE)
If FLAG<1> = 1; PC = address (FALSE)

BTFSS	Bit Test File, Skip if Set			
Syntax	`BTFSS f, b {,a}`			
Operands	0 ≤ f ≤ 255 0 ≤ b ≤ 7 a ∈ [0, 1]			
Operation	Skip if (f<b>) = 1			
Status Affected	None			
Encoding	1010	bbba	ffff	ffff
Description	If bit 'b' in register 'f' is '1', then the next instruction is skipped. If bit 'b' is '1', then the next instruction fetched during the current instruction execution is discarded and a NOP is executed instead, making this a 2-cycle instruction. If 'a' is '0', the Access Bank is selected. If 'a' is '1', the BSR is used to select the GPR bank. If 'a' is '0' and the extended instruction set is enabled, this instruction operates in Indexed Literal Offset Addressing mode whenever f ≤ 95 (5Fh). See Byte-Oriented and Bit-Oriented Instructions in Indexed Literal Offset Mode for details.			

.....continued	
BTFSS	**Bit Test File, Skip if Set**
Syntax	`BTFSS f, b {,a}`
Words	1
Cycles	1 (2) **Note:** 3 cycles if skip and followed by a 2-word instruction. 4 cycles if skip and followed by a 3-word instruction.

Q Cycle Activity:

If no skip:

Q1	Q2	Q3	Q4
Decode	Read register 'f'	Process Data	No operation

If skip:

Q1	Q2	Q3	Q4
Decode	Read register 'f'	Process Data	No operation
No operation	No operation	No operation	No operation

If skip and followed by 2-word instruction:

Q1	Q2	Q3	Q4
Decode	Read register 'f'	Process Data	No operation
No operation	No operation	No operation	No operation
No operation	No operation	No operation	No operation

If skip and followed by 3-word instruction:

Q1	Q2	Q3	Q4
Decode	Read register 'f'	Process Data	No operation
No operation	No operation	No operation	No operation
No operation	No operation	No operation	No operation
No operation	No operation	No operation	No operation

Example:

```
HERE   BTFSS   FLAG, 1, 0
FALSE:
TRUE:
```

Before Instruction
PC = address `(HERE)`

After Instruction
If FLAG<1> = `0`; PC = address `(FALSE)`
If FLAG<1> = `1`; PC = address `(TRUE)`

BTG	Bit Toggle f			
Syntax	`BTG f, b {,a}`			
Operands	0 ≤ f ≤ 255 0 ≤ b ≤ 7 a ∈ [0, 1]			
Operation	(f<b>) → f<b>			
Status Affected	None			
Encoding	0111	bbba	ffff	ffff
Description	Bit 'b' in data memory location 'f' is inverted. If 'a' is '0', the Access Bank is selected. If 'a' is '1', the BSR is used to select the GPR bank. If 'a' is '0' and the extended instruction set is enabled, this instruction operates in Indexed Literal Offset Addressing mode whenever f ≤ 95 (5Fh). See Byte-Oriented and Bit-Oriented Instructions in Indexed Literal Offset Mode for details.			
Words	1			
Cycles	1			

Q Cycle Activity:

Q1	Q2	Q3	Q4
Decode	Read register 'f'	Process Data	Write register 'f'

Example: `BTG PORTC, 4, 0`

Before Instruction
PORTC = 0111 0101 [75h]

After Instruction
PORTC = 0110 0101 [65h]

BZ	Branch if Zero			
Syntax	`BZ n`			
Operands	-128 ≤ n ≤ 127			
Operation	If ZERO bit is '1' (PC) + 2 + 2n → PC			
Status Affected	None			
Encoding	1110	0000	nnnn	nnnn
Description	If the ZERO bit is '1', then the program will branch. The 2's complement number '2n' is added to the PC. Since the PC will have incremented to fetch the next instruction, the new address will be PC + 2 + 2n. This instruction is then a 2-cycle instruction.			
Words	1			
Cycles	1 (2)			

Q Cycle Activity:

If Jump:

Q1	Q2	Q3	Q4
Decode	Read literal 'n'	Process Data	Write to PC
No operation	No operation	No operation	No operation

If No Jump:

Q1	Q2	Q3	Q4
Decode	Read literal 'n'	Process Data	No operation

Example: `HERE BOV Jump`

Before Instruction
PC = address `(HERE)`

After Instruction
If ZERO = `1`; PC = address `(Jump)`
If ZERO = `0`; PC = address `(HERE + 2)`

CALL	**Subroutine Call**			
Syntax	`CALL k {,s}`			
Operands	0 ≤ k ≤ 1048575 s ∈ [0, 1]			
Operation	(PC) + 4 → TOS k → PC<20:1> If s = 1 (W) → WREG_CSHAD (STATUS) → STATUS_CSHAD (BSR) → BSR_CSHAD			
Status Affected	None			
Encoding 1st word (k<7:0>) 2nd word (k<19:8>)	1110	110s	$k_7$kkk	kkkk_0
	1111	k_{19}kkk	kkkk	kkkk_8
Description	Subroutine call of entire 2-Mbyte memory range. First, return address (PC + 4) is pushed onto the return stack. If 's' = 1, the WREG, STATUS and BSR registers are also pushed into their respective shadow registers WREG_CSHAD, STATUS_CSHAD and BSR_CSHAD. If 's' = 0, no update occurs (default). Then, the 20-bit value 'k' is loaded into PC<20:1>. CALL is a 2-cycle instruction.			
Words	2			
Cycles	2			

Q Cycle Activity:

Q1	Q2	Q3	Q4
Decode	Read literal 'k'<7:0>	PUSH PC to stack	Read literal 'k'<19:8> Write to PC

No operation	No operation	No operation	No operation

Example: `HERE CALL THERE, 1`

Before Instruction

PC = address `(HERE)`

After Instruction

PC = address `(THERE)`
TOS = address `(HERE + 4)`
WREG_CSHAD = (WREG)
BSR_CSHAD = (BSR)
STATUS_CSHAD = (STATUS)

CALLW	**Subroutine Call using WREG**			
Syntax	`CALLW`			
Operands	None			
Operation	(PC) + 2 → TOS (W) → PCL (PCLATH) → PCH (PCLATU) → PCU			
Status Affected	None			
Encoding	`0000`	`0000`	`0001`	`0100`
Description	First, the return address (PC + 2) is pushed onto the return stack. Next, the contents of W are written to PCL; the existing value is discarded. Then, the contents of PCLATH and PCLATU are latched into PCH and PCU respectively. The second cycle is executed as a `NOP` instruction while the new next instruction is fetched. Unlike `CALL`, there is no option to update W, STATUS or BSR.			
Words	1			
Cycles	2			

Q Cycle Activity:

Q1	Q2	Q3	Q4
Decode	Read WREG	PUSH PC to stack	No operation
No operation	No operation	No operation	No operation

Example: `HERE CALLW`

Before Instruction

PC = address `(HERE)`
PCLATH = `10h`
PCLATU = `00h`
W = `06h`

After Instruction

PC = address `001006h`
TOS = address `(HERE + 2)`

PCLATH = 10h
PCLATU = 00h
W = 06h

CLRF	Clear f			
Syntax	**CLRF f {,a}**			
Operands	0 ≤ f ≤ 255 a ∈ [0, 1]			
Operation	000h → f 1 → Z			
Status Affected	Z			
Encoding	0110	101a	ffff	ffff
Description	Clears the contents of the specified register 'f'. If 'a' is '0', the Access Bank is selected. If 'a' is '1', the BSR is used to select the GPR bank. If 'a' is '0' and the extended instruction set is enabled, this instruction operates in Indexed Literal Offset Addressing mode whenever f ≤ 95 (5Fh). See Byte-Oriented and Bit-Oriented Instructions in Indexed Literal Offset Mode for details.			
Words	1			
Cycles	1			

Q Cycle Activity:

Q1	Q2	Q3	Q4
Decode	Read register 'f'	Process Data	Write register 'f'

Example: CLRF FLAG_REG, 1

Before Instruction
FLAG_REG = 5Ah

After Instruction
FLAG_REG = 00h

CLRWDT	Clear Watchdog Timer			
Syntax	**CLRWDT**			
Operands	None			
Operation	000h → WDT 1 → $\overline{TO}$ 1 → $\overline{PD}$			
Status Affected	$\overline{TO}$, $\overline{PD}$			
Encoding	0000	0000	0000	0100
Description	CLRWDT instruction resets the Watchdog Timer. It also resets the STATUS bits, and $\overline{TO}$ and $\overline{PD}$ are set.			
Words	1			

.....continued	
CLRWDT	**Clear Watchdog Timer**
Syntax	**CLRWDT**
Cycles	1

Q Cycle Activity:

Q1	Q2	Q3	Q4
Decode	No operation	Process Data	No operation

Example: CLRWDT

Before Instruction
WDT Counter = ?

After Instruction
WDT Counter = 00h
$\overline{TO}$ = 1
$\overline{PD}$ = 1

COMF	**Complement f**			
Syntax	**COMF f {,d {,a}}**			
Operands	0 ≤ f ≤ 255 d ∈ [0, 1] a ∈ [0, 1]			
Operation	(f̄) → dest			
Status Affected	N, Z			
Encoding	0001	11da	ffff	ffff
Description	The contents of register 'f' are complemented. If 'd' is '0', the result is stored in W. If 'd' is '1', the result is stored back in the register 'f' (default). If 'a' is '0', the Access Bank is selected. If 'a' is '1', the BSR is used to select the GPR bank. If 'a' is '0' and the extended instruction set is enabled, this instruction operates in Indexed Literal Offset Addressing mode whenever f ≤ 95 (5Fh). See Byte-Oriented and Bit-Oriented Instructions in Indexed Literal Offset Mode for details.			
Words	1			
Cycles	1			

Q Cycle Activity:

Q1	Q2	Q3	Q4
Decode	Read register 'f'	Process Data	Write to destination

Example: COMF REG0, 0, 0

Before Instruction
REG = 13h

After Instruction
REG = 13h
W = ECh

CPFSEQ	Compare f with W, skip if f = W			
Syntax	CPFSEQ f {,a}			
Operands	0 ≤ f ≤ 255 a ∈ [0, 1]			
Operation	(f) – (W), skip if (f) = (W) (unsigned comparison)			
Status Affected	None			
Encoding	0110	001a	ffff	ffff
Description	Compares the contents of data memory location 'f' to the contents of W by performing an unsigned subtraction. If the contents of 'f' are equal to the contents of WREG, then the fetched instruction is discarded and a NOP is executed instead, making this a 2-cycle instruction. If 'a' is '0', the Access Bank is selected. If 'a' is '1', the BSR is used to select the GPR bank. If 'a' is '0' and the extended instruction set is enabled, this instruction operates in Indexed Literal Offset Addressing mode whenever f ≤ 95 (5Fh). See Byte-Oriented and Bit-Oriented Instructions in Indexed Literal Offset Mode for details.			
Words	1			
Cycles	1 (2) **Note:** 3 cycles if skip and followed by a 2-word instruction. 4 cycles if skip and followed by a 3-word instruction.			

Q Cycle Activity:

If no skip:

Q1	Q2	Q3	Q4
Decode	Read register 'f'	Process Data	No operation

If skip:

Q1	Q2	Q3	Q4
Decode	Read register 'f'	Process Data	No operation
No operation	No operation	No operation	No operation

If skip and followed by 2-word instruction:

Q1	Q2	Q3	Q4
Decode	Read register 'f'	Process Data	No operation
No operation	No operation	No operation	No operation
No operation	No operation	No operation	No operation

If skip and followed by 3-word instruction:

Q1	Q2	Q3	Q4
Decode	Read register 'f'	Process Data	No operation
No operation	No operation	No operation	No operation
No operation	No operation	No operation	No operation
No operation	No operation	No operation	No operation

Example:

```
HERE    CPFSEQ    REG, 0
NEQUAL:
EQUAL:
```

Before Instruction
PC = address (HERE)
W = ?
REG = ?

After Instruction
If REG = W; PC = address (EQUAL)
If REG ≠ W; PC = address (NEQUAL)

CPFSGT	Compare f with W, skip if f > W			
Syntax	CPFSGT f {,a}			
Operands	0 ≤ f ≤ 255 a ∈ [0, 1]			
Operation	(f) – (W), skip if (f) > (W) (unsigned comparison)			
Status Affected	None			
Encoding	0110	010a	ffff	ffff
Description	Compares the contents of data memory location 'f' to the contents of W by performing an unsigned subtraction. If the contents of 'f' are greater than the contents of WREG, then the fetched instruction is discarded and a NOP is executed instead, making this a 2-cycle instruction. If 'a' is '0', the Access Bank is selected. If 'a' is '1', the BSR is used to select the GPR bank. If 'a' is '0' and the extended instruction set is enabled, this instruction operates in Indexed Literal Offset Addressing mode whenever f ≤ 95 (5Fh). See Byte-Oriented and Bit-Oriented Instructions in Indexed Literal Offset Mode for details.			
Words	1			
Cycles	1 (2) **Note:** 3 cycles if skip and followed by a 2-word instruction. 4 cycles if skip and followed by a 3-word instruction.			

Q Cycle Activity:

If no skip:

Q1	Q2	Q3	Q4
Decode	Read register 'f'	Process Data	No operation

If skip:

Q1	Q2	Q3	Q4
Decode	Read register 'f'	Process Data	No operation
No operation	No operation	No operation	No operation

If skip and followed by 2-word instruction:

Q1	Q2	Q3	Q4
Decode	Read register 'f'	Process Data	No operation
No operation	No operation	No operation	No operation
No operation	No operation	No operation	No operation

If skip and followed by 3-word instruction:

Q1	Q2	Q3	Q4
Decode	Read register 'f'	Process Data	No operation
No operation	No operation	No operation	No operation
No operation	No operation	No operation	No operation
No operation	No operation	No operation	No operation

Example:

```
HERE    CPFSGT    REG, 0
NGREATER:
GREATER:
```

Before Instruction
PC = address (HERE)
W = ?
REG = ?

After Instruction
If REG > W; PC = address (GREATER)
If REG ≤ W; PC = address (NGREATER)

CPFSLT	**Compare f with W, skip if f < W**			
Syntax	`CPFSLT f {,a}`			
Operands	0 ≤ f ≤ 255 a ∈ [0, 1]			
Operation	(f) – (W), skip if (f) < (W) (unsigned comparison)			
Status Affected	None			
Encoding	0110	000a	ffff	ffff

.....continued	
CPFSLT	**Compare f with W, skip if f < W**
Syntax	`CPFSLT f {,a}`
Description	Compares the contents of data memory location 'f' to the contents of W by performing an unsigned subtraction. If the contents of 'f' are less than the contents of WREG, then the fetched instruction is discarded and a `NOP` is executed instead, making this a 2-cycle instruction. If 'a' is '0', the Access Bank is selected. If 'a' is '1', the BSR is used to select the GPR bank. If 'a' is '0' and the extended instruction set is enabled, this instruction operates in Indexed Literal Offset Addressing mode whenever f ≤ 95 (5Fh). See Byte-Oriented and Bit-Oriented Instructions in Indexed Literal Offset Mode for details.
Words	1
Cycles	1 (2) **Note:** 3 cycles if skip and followed by a 2-word instruction. 4 cycles if skip and followed by a 3-word instruction.

Q Cycle Activity:

If no skip:

Q1	Q2	Q3	Q4
Decode	Read register 'f'	Process Data	No operation

If skip:

Q1	Q2	Q3	Q4
Decode	Read register 'f'	Process Data	No operation
No operation	No operation	No operation	No operation

If skip and followed by 2-word instruction:

Q1	Q2	Q3	Q4
Decode	Read register 'f'	Process Data	No operation
No operation	No operation	No operation	No operation
No operation	No operation	No operation	No operation

If skip and followed by 3-word instruction:

Q1	Q2	Q3	Q4
Decode	Read register 'f'	Process Data	No operation
No operation	No operation	No operation	No operation
No operation	No operation	No operation	No operation
No operation	No operation	No operation	No operation

Example:

```
HERE   CPFSLT   REG, 1
NLESS:
LESS:
```

Before Instruction
PC = address (HERE)
W = ?
REG = ?

After Instruction
If REG < W; PC = address (LESS)
If REG ≥ W; PC = address (NLESS)

DAW	Decimal Adjust W Register			
Syntax	DAW			
Operands	None			

Operation	If [(W<3:0>) > 9] or [DC = 1] then
	(W<3:0>) + 6 → W<3:0>;
	else
	(W<3:0>) → W<3:0>;
	
	If [(W<7:4>) + DC > 9] or [C = 1] then
	(W<7:4>) + 6 + DC → W<7:4>;
	else
	(W<7:4>) + DC → W<7:4>			

Status Affected	C			
Encoding	0000	0000	0000	0111
Description	DAW adjusts the 8-bit value in W, resulting from the earlier addition of two variables (each in packed BCD format) and produces a correct packed BCD result.			
Words	1			
Cycles	1			

Q Cycle Activity:

Q1	Q2	Q3	Q4
Decode	Read register W	Process Data	Write register W

Example 1: DAW

Before Instruction
W = A5h
C = 0
DC = 0

After Instruction
W = 05h
C = 1
DC = 0

Example 2: DAW

Before Instruction
W = CEh
C = 0
DC = 0

After Instruction
W = 34h
C = 1
DC = 0

DECF	Decrement f			
Syntax	`DECF f {,d {,a}}`			
Operands	0 ≤ f ≤ 255 d ∈ [0, 1] a ∈ [0, 1]			
Operation	(f) – 1 → dest			
Status Affected	C, DC, N, OV, Z			
Encoding	0000	01da	ffff	ffff
Description	Decrement register 'f'. If 'd' is '0', the result is stored in W. If 'd' is '1', the result is stored back in the register 'f' (default). If 'a' is '0', the Access Bank is selected. If 'a' is '1', the BSR is used to select the GPR bank. If 'a' is '0' and the extended instruction set is enabled, this instruction operates in Indexed Literal Offset Addressing mode whenever f ≤ 95 (5Fh). See Byte-Oriented and Bit-Oriented Instructions in Indexed Literal Offset Mode for details.			
Words	1			
Cycles	1			

Q Cycle Activity:

Q1	Q2	Q3	Q4
Decode	Read register 'f'	Process Data	Write to destination

Example: `DECF CNT, 1, 0`

Before Instruction
CNT = 01h
Z = 0

After Instruction
CNT = 00h
Z = 1

DECFSZ	Decrement f, skip if 0
Syntax	`DECFSZ f {,d {,a}}`
Operands	0 ≤ f ≤ 255 d ∈ [0, 1] a ∈ [0, 1]

.....continued				
DECFSZ	**Decrement f, skip if 0**			
Syntax	`DECFSZ f {,d {,a}}`			
Operation	(f) – 1 → dest, skip if result = 0			
Status Affected	None			
Encoding	0010	11da	ffff	ffff
Description	The contents of register 'f' are decremented. If 'd' is '0', the result is placed in W. If 'd' is '1', the result is placed back in register 'f' (default). If the result is '0', the next instruction, which is already fetched, is discarded and a NOP is executed instead, making it a 2-cycle instruction. If 'a' is '0', the Access Bank is selected. If 'a' is '1', the BSR is used to select the GPR bank. If 'a' is '0' and the extended instruction set is enabled, this instruction operates in Indexed Literal Offset Addressing mode whenever f ≤ 95 (5Fh). See Byte-Oriented and Bit-Oriented Instructions in Indexed Literal Offset Mode for details.			
Words	1			
Cycles	1 (2) **Note:** 3 cycles if skip and followed by a 2-word instruction. 4 cycles if skip and followed by a 3-word instruction.			

Q Cycle Activity:

If no skip:

Q1	Q2	Q3	Q4
Decode	Read register 'f'	Process Data	Write to destination

If skip:

Q1	Q2	Q3	Q4
Decode	Read register 'f'	Process Data	Write to destination
No operation	No operation	No operation	No operation

If skip and followed by 2-word instruction:

Q1	Q2	Q3	Q4
Decode	Read register 'f'	Process Data	Write to destination
No operation	No operation	No operation	No operation
No operation	No operation	No operation	No operation

If skip and followed by 3-word instruction:

Q1	Q2	Q3	Q4
Decode	Read register 'f'	Process Data	Write to destination
No operation	No operation	No operation	No operation
No operation	No operation	No operation	No operation

No operation	No operation	No operation	No operation

Example:

```
HERE    DECFSZ    CNT, 1, 1
        GOTO      LOOP
CONTINUE
```

Before Instruction
CNT = ?
PC = address (HERE)

After Instruction
CNT = CNT – 1
If CNT = 0; PC = address (CONTINUE)
If CNT ≠ 0; PC = address (HERE + 2)

DCFSNZ	Decrement f, skip if not 0			
Syntax	DCFSNZ f {,d {,a}}			
Operands	0 ≤ f ≤ 255 d ∈ [0, 1] a ∈ [0, 1]			
Operation	(f) – 1 → dest, skip if result ≠ 0			
Status Affected	None			
Encoding	0100	11da	ffff	ffff
Description	The contents of register 'f' are decremented. If 'd' is '0', the result is placed in W. If 'd' is '1', the result is placed back in register 'f' (default). If the result is not '0', the next instruction, which is already fetched, is discarded and a NOP is executed instead, making it a 2-cycle instruction. If 'a' is '0', the Access Bank is selected. If 'a' is '1', the BSR is used to select the GPR bank. If 'a' is '0' and the extended instruction set is enabled, this instruction operates in Indexed Literal Offset Addressing mode whenever f ≤ 95 (5Fh). See Byte-Oriented and Bit-Oriented Instructions in Indexed Literal Offset Mode for details.			
Words	1			
Cycles	1 (2) **Note:** 3 cycles if skip and followed by a 2-word instruction. 4 cycles if skip and followed by a 3-word instruction.			

Q Cycle Activity:

If no skip:

Q1	Q2	Q3	Q4
Decode	Read register 'f'	Process Data	Write to destination

If skip:

Q1	Q2	Q3	Q4
Decode	Read register 'f'	Process Data	Write to destination

No operation	No operation	No operation	No operation

If skip and followed by 2-word instruction:

Q1	Q2	Q3	Q4
Decode	Read register 'f'	Process Data	Write to destination
No operation	No operation	No operation	No operation
No operation	No operation	No operation	No operation

If skip and followed by 3-word instruction:

Q1	Q2	Q3	Q4
Decode	Read register 'f'	Process Data	Write to destination
No operation	No operation	No operation	No operation
No operation	No operation	No operation	No operation
No operation	No operation	No operation	No operation

Example:

```
HERE   DCFSNZ   TEMP, 1, 0
ZERO:
NZERO:
```

Before Instruction
TEMP = ?
PC = address (HERE)

After Instruction
TEMP = TEMP – 1
If TEMP = 0; PC = address (ZERO)
If TEMP ≠ 0; PC = address (NZERO)

GOTO	Unconditional Branch			
Syntax	GOTO k			
Operands	0 ≤ k ≤ 1048575			
Operation	k → PC<20:1>			
Status Affected	None			
Encoding 1st word (k<7:0>) 2nd word (k<19:8>)	1110	1111	$k_7$kkk	kkkk_0
	1111	k_{19}kkk	kkkk	kkkk_8
Description	GOTO allows an unconditional branch anywhere within entire 2-Mbyte memory range. The 20-bit value 'k' is loaded into PC<20:1>. GOTO is always a 2-cycle instruction.			
Words	2			
Cycles	2			

Q Cycle Activity:

Q1	Q2	Q3	Q4
Decode	Read literal 'k'<7:0>	No operation	Read literal 'k'<19:8> Write to PC
No operation	No operation	No operation	No operation

Example: `HERE GOTO THERE`

Before Instruction

PC = address `(HERE)`

After Instruction

PC = address `(THERE)`

INCF	Increment f			
Syntax	`INCF f {,d {,a}}`			
Operands	0 ≤ f ≤ 255 d ∈ [0, 1] a ∈ [0, 1]			
Operation	(f) + 1 → dest			
Status Affected	C, DC, N, OV, Z			
Encoding	0010	10da	ffff	ffff
Description	The contents of register 'f' are incremented. If 'd' is '0', the result is stored in W. If 'd' is '1', the result is stored back in the register 'f' (default). If 'a' is '0', the Access Bank is selected. If 'a' is '1', the BSR is used to select the GPR bank. If 'a' is '0' and the extended instruction set is enabled, this instruction operates in Indexed Literal Offset Addressing mode whenever f ≤ 95 (5Fh). See Byte-Oriented and Bit-Oriented Instructions in Indexed Literal Offset Mode for details.			
Words	1			
Cycles	1			

Q Cycle Activity:

Q1	Q2	Q3	Q4
Decode	Read register 'f'	Process Data	Write to destination

Example: `INCF CNT, 1, 0`

Before Instruction
CNT = FFh
Z = 0
C = ?
DC = ?

After Instruction
CNT = 00h
Z = 1

C = 1
DC = 1

INCFSZ	Increment f, skip if 0			
Syntax	`INCFSZ f {,d {,a}}`			
Operands	0 ≤ f ≤ 255 d ∈ [0, 1] a ∈ [0, 1]			
Operation	(f) + 1 → dest, skip if result = 0			
Status Affected	None			
Encoding	0011	11da	ffff	ffff
Description	The contents of register 'f' are incremented. If 'd' is '0', the result is placed in W. If 'd' is '1', the result is placed back in register 'f' (default). If the result is '0', the next instruction, which is already fetched, is discarded and a NOP is executed instead, making it a 2-cycle instruction. If 'a' is '0', the Access Bank is selected. If 'a' is '1', the BSR is used to select the GPR bank. If 'a' is '0' and the extended instruction set is enabled, this instruction operates in Indexed Literal Offset Addressing mode whenever f ≤ 95 (5Fh). See Byte-Oriented and Bit-Oriented Instructions in Indexed Literal Offset Mode for details.			
Words	1			
Cycles	1 (2) **Note:** 3 cycles if skip and followed by a 2-word instruction. 4 cycles if skip and followed by a 3-word instruction.			

Q Cycle Activity:

If no skip:

Q1	Q2	Q3	Q4
Decode	Read register 'f'	Process Data	Write to destination

If skip:

Q1	Q2	Q3	Q4
Decode	Read register 'f'	Process Data	Write to destination
No operation	No operation	No operation	No operation

If skip and followed by 2-word instruction:

Q1	Q2	Q3	Q4
Decode	Read register 'f'	Process Data	Write to destination
No operation	No operation	No operation	No operation
No operation	No operation	No operation	No operation

If skip and followed by 3-word instruction:

Q1	Q2	Q3	Q4
Decode	Read register 'f'	Process Data	Write to destination
No operation	No operation	No operation	No operation
No operation	No operation	No operation	No operation
No operation	No operation	No operation	No operation

Example:

```
HERE    INCFSZ    CNT, 1, 0
NZERO:
ZERO:
```

Before Instruction
CNT = ?
PC = address (HERE)

After Instruction
CNT = CNT + 1
If CNT = 0; PC = address (ZERO)
If CNT ≠ 0; PC = address (NZERO)

INFSNZ	**Increment f, skip if not 0**			
Syntax	`INFSNZ f {,d {,a}}`			
Operands	0 ≤ f ≤ 255 d ∈ [0, 1] a ∈ [0, 1]			
Operation	(f) + 1 → dest, skip if result ≠ 0			
Status Affected	None			
Encoding	0100	10da	ffff	ffff
Description	The contents of register 'f' are incremented. If 'd' is '0', the result is placed in W. If 'd' is '1', the result is placed back in register 'f' (default). If the result is not '0', the next instruction, which is already fetched, is discarded and a NOP is executed instead, making it a 2-cycle instruction. If 'a' is '0', the Access Bank is selected. If 'a' is '1', the BSR is used to select the GPR bank. If 'a' is '0' and the extended instruction set is enabled, this instruction operates in Indexed Literal Offset Addressing mode whenever f ≤ 95 (5Fh). See Byte-Oriented and Bit-Oriented Instructions in Indexed Literal Offset Mode for details.			
Words	1			
Cycles	1 (2) **Note:** 3 cycles if skip and followed by a 2-word instruction. 4 cycles if skip and followed by a 3-word instruction.			

Q Cycle Activity:

If no skip:

Q1	Q2	Q3	Q4

Decode	Read register 'f'	Process Data	Write to destination

If skip:

Q1	Q2	Q3	Q4
Decode	Read register 'f'	Process Data	Write to destination
No operation	No operation	No operation	No operation

If skip and followed by 2-word instruction:

Q1	Q2	Q3	Q4
Decode	Read register 'f'	Process Data	Write to destination
No operation	No operation	No operation	No operation
No operation	No operation	No operation	No operation

If skip and followed by 3-word instruction:

Q1	Q2	Q3	Q4
Decode	Read register 'f'	Process Data	Write to destination
No operation	No operation	No operation	No operation
No operation	No operation	No operation	No operation
No operation	No operation	No operation	No operation

Example:

```
HERE    INFSNZ   REG, 1, 0
ZERO:
NZERO:
```

Before Instruction
REG = ?
PC = address (HERE)

After Instruction
REG = REG + 1
If REG = 0; PC = address (ZERO)
If REG ≠ 0; PC = address (NZERO)

IORLW	Inclusive OR literal with W			
Syntax	`IORLW k`			
Operands	0 ≤ k ≤ 255			
Operation	(W) .OR. k → W			
Status Affected	N, Z			
Encoding	0000	1001	kkkk	kkkk
Description	The contents of W are ORed with the 8-bit literal 'k'. The result is placed in W.			
Words	1			
Cycles	1			

Q Cycle Activity:

Q1	Q2	Q3	Q4
Decode	Read literal 'k'	Process Data	Write to W

Example: `IORLW 35h`

Before Instruction
W = `9Ah`

After Instruction
W = `B5h`

IORWF	Inclusive OR W with f			
Syntax	`IORWF f {,d {,a}}`			
Operands	0 ≤ f ≤ 255 d ∈ [0, 1] a ∈ [0, 1]			
Operation	(W) .OR. (f) → dest			
Status Affected	N, Z			
Encoding	0001	00da	ffff	ffff
Description	Inclusive OR W with register 'f'. If 'd' is '0', the result is stored in W. If 'd' is '1', the result is stored back in the register 'f' (default). If 'a' is '0', the Access Bank is selected. If 'a' is '1', the BSR is used to select the GPR bank. If 'a' is '0' and the extended instruction set is enabled, this instruction operates in Indexed Literal Offset Addressing mode whenever f ≤ 95 (5Fh). See Byte-Oriented and Bit-Oriented Instructions in Indexed Literal Offset Mode for details.			
Words	1			
Cycles	1			

Q Cycle Activity:

Q1	Q2	Q3	Q4
Decode	Read register 'f'	Process Data	Write to destination

Example: `IORWF RESULT, 0, 1`

Before Instruction
RESULT = `13h`
W = `91h`

After Instruction
RESULT = `13h`
W = `93h`

LFSR	Load FSR			
Syntax	`LFSR` f_n, k			
Operands	$0 \le f_n \le 2$ $0 \le k \le 16383$			
Operation	$k \rightarrow FSRf_n$			
Status Affected	None			
Encoding	1110	1110	$00f_nf_n$	$k_{13}kkk_{10}$
	1111	$00k_9k$	kkkk	$kkkk_0$
Description	The 14-bit literal 'k' is loaded into the File Select Register 'f_n'.			
Words	2			
Cycles	2			

Q Cycle Activity:

Q1	Q2	Q3	Q4
Decode	Read literal 'k'<13:10>	Process Data	Write literal 'k'<13:10> to $FSRf_n$<13:10>
No operation	Read literal 'k'<9:0>	No operation	Write literal 'k'<9:0> to $FSRf_n$<9:0>

Example: `LFSR 2, 3ABh`

Before Instruction
FSR2H = ?
FSR2L = ?

After Instruction
FSR2H = 03h
FSR2L = ABh

MOVF	Move f			
Syntax	`MOVF f {,d {,a}}`			
Operands	$0 \le f \le 255$ $d \in [0, 1]$ $a \in [0, 1]$			
Operation	(f) → dest			
Status Affected	N, Z			
Encoding	0101	00da	ffff	ffff
Description	The contents of register 'f' are moved to a destination. If 'd' is '0', the result is stored in W. If 'd' is '1', the result is stored back in the register 'f' (default). If 'a' is '0', the Access Bank is selected. If 'a' is '1', the BSR is used to select the GPR bank. If 'a' is '0' and the extended instruction set is enabled, this instruction operates in Indexed Literal Offset Addressing mode whenever f ≤ 95 (5Fh). See Byte-Oriented and Bit-Oriented Instructions in Indexed Literal Offset Mode for details.			

.....continued	
MOVF	**Move f**
Syntax	`MOVF f {,d {,a}}`
Words	1
Cycles	1

Q Cycle Activity:

Q1	Q2	Q3	Q4
Decode	Read register 'f'	Process Data	Write to destination

Example: `MOVF REG, 0, 0`

Before Instruction
REG = `22h`
W = `FFh`

After Instruction
REG = `22h`
W = `22h`

MOVFF	**Move f to f**			
Syntax	`MOVFF` f_s, f_d			
Operands	$0 \le f_s \le 4095$ $0 \le f_d \le 4095$			
Operation	$(f_s) \rightarrow f_d$			
Status Affected	None			
Encoding	1100	$f_sf_sf_sf_s$	$f_sf_sf_sf_s$	$f_sf_sf_sf_s$
	1111	$f_df_df_df_d$	$f_df_df_df_d$	$f_df_df_df_d$
Description	The contents of source register 'f_s' are moved to destination register 'f_d'. Location of source 'f_s' can be anywhere in the 4096-byte data space (`000h` to `FFFh`) and location of destination 'f_d' can also be anywhere from `000h` to `FFFh`. `MOVFF` is particularly useful for transferring a data memory location to a peripheral register (such as the transmit buffer or an I/O port). The `MOVFF` instruction cannot use the PCL, TOSU, TOSH or TOSL as the destination register. **Note:** `MOVFF` has curtailed the source and destination range to the lower 4 Kbyte space of memory (Banks 1 through 15). For everything else, use `MOVFFL`.			
Words	2			
Cycles	2			

Q Cycle Activity:

Q1	Q2	Q3	Q4

Decode	Read register 'f_s'	Process Data	No operation
Decode	No operation No dummy read	No operation	Write register 'f_d'

Example: `MOVFF REG1, REG2`

Before Instruction
Address of REG1 = `100h`
Address of REG2 = `200h`
REG1 = `33h`
REG2 = `11h`

After Instruction
Address of REG1 = `100h`
Address of REG2 = `200h`
REG1 = `33h`
REG2 = `33h`

MOVFFL	**Move f to f (Long Range)**			
Syntax	`MOVFFL` f_s, f_d			
Operands	$0 \le f_s \le 16383$ $0 \le f_d \le 16383$			
Operation	$(f_s) \rightarrow f_d$			
Status Affected	None			
Encoding	0000	0000	0110	$f_s f_s f_s f_s$
	1111	$f_s f_s f_s f_s$	$f_s f_s f_s f_s$	$f_s f_s f_d f_d$
	1111	$f_d f_d f_d f_d$	$f_d f_d f_d f_d$	$f_d f_d f_d f_d$
Description	The contents of source register 'f_s' are moved to destination register 'f_d'. Location of source 'f_s' can be anywhere in the 16 Kbyte data space (`0000h` to `3FFFh`) and location of destination 'f_d' can also be anywhere from `0000h` to `3FFFh`. Either source or destination can be W (a useful special situation). `MOVFFL` is particularly useful for transferring a data memory location to a peripheral register (such as the transmit buffer or an I/O port). The `MOVFFL` instruction cannot use the PCL, TOSU, TOSH or TOSL as the destination register.			
Words	3			
Cycles	3			

Q Cycle Activity:

Q1	Q2	Q3	Q4
Decode	No operation	No operation	No operation
Decode	Read register 'f_s'	Process Data	No operation
Decode	No operation No dummy read	No operation	Write register 'f_d'

Example: MOVFFL 2000h, 200Ah

Before Instruction
Contents of 2000h = 33h
Contents of 200Ah = 11h

After Instruction
Contents of 2000h = 33h
Contents of 200Ah = 33h

MOVLB	Move literal to BSR			
Syntax	**MOVLB k**			
Operands	0 ≤ k ≤ 63			
Operation	k → BSR			
Status Affected	None			
Encoding	0000	0001	00kk	kkkk
Description	The 6-bit literal 'k' is loaded into the Bank Select Register (BSR<5:0>). The value of BSR<7:6> always remains '0'.			
Words	1			
Cycles	1			

Q Cycle Activity:

Q1	Q2	Q3	Q4
Decode	Read literal 'k'	Process Data	Write to BSR

Example: MOVLB 5

Before Instruction
BSR = 02h

After Instruction
BSR = 05h

MOVLW	Move literal to W			
Syntax	**MOVLW k**			
Operands	0 ≤ k ≤ 255			
Operation	k → W			
Status Affected	None			
Encoding	0000	1110	kkkk	kkkk
Description	The 8-bit literal 'k' is loaded into W.			
Words	1			
Cycles	1			

Q Cycle Activity:

Q1	Q2	Q3	Q4
Decode	Read literal 'k'	Process Data	Write to W

Example: `MOVLW 5Ah`

Before Instruction
W = ?

After Instruction
W = `5Ah`

MOVWF	Move W to f			
Syntax	`MOVWF f {,a}`			
Operands	0 ≤ f ≤ 255 a ∈ [0, 1]			
Operation	(W) → f			
Status Affected	None			
Encoding	0110	111a	ffff	ffff
Description	Move data from W to register 'f'. Location 'f' can be anywhere in the 256-byte bank. If 'a' is '0', the Access Bank is selected. If 'a' is '1', the BSR is used to select the GPR bank. If 'a' is '0' and the extended instruction set is enabled, this instruction operates in Indexed Literal Offset Addressing mode whenever f ≤ 95 (5Fh). See Byte-Oriented and Bit-Oriented Instructions in Indexed Literal Offset Mode for details.			
Words	1			
Cycles	1			

Q Cycle Activity:

Q1	Q2	Q3	Q4
Decode	Read W	Process Data	Write register 'f'

Example: `MOVWF REG, 0`

Before Instruction
W = `4Fh`
REG = `FFh`

After Instruction
W = `4Fh`
REG = `4Fh`

MULLW	Multiply literal with W
Syntax	`MULLW k`
Operands	0 ≤ k ≤ 255
Operation	(W) x k → PRODH:PRODL

.....continued				
MULLW	**Multiply literal with W**			
Syntax	**MULLW k**			
Status Affected	None			
Encoding	0000	1101	kkkk	kkkk
Description	An unsigned multiplication is carried out between the contents of W and the 8-bit literal 'k'. The 16-bit result is placed in the PRODH:PRODL register pair. PRODH contains the high byte. W is unchanged. None of the Status flags are affected. Note that neither overflow nor carry is possible in this operation. A zero result is possible but not detected.			
Words	1			
Cycles	1			

Q Cycle Activity:

Q1	Q2	Q3	Q4
Decode	Read literal 'k'	Process Data	Write registers PRODH:PRODL

Example: MULLW 0C4h

Before Instruction
W = E2h
PRODH = ?
PRODL = ?

After Instruction
W = E2h
PRODH = ADh
PRODL = 08h

MULWF	**Multiply W with f**			
Syntax	**MULWF f {,a}**			
Operands	$0 \le f \le 255$ $a \in [0, 1]$			
Operation	(W) x (f) → PRODH:PRODL			
Status Affected	None			
Encoding	0000	001a	ffff	ffff

.....continued	
MULWF	**Multiply W with f**
Syntax	`MULWF f {,a}`
Description	An unsigned multiplication is carried out between the contents of W and the register file location 'f'. The 16-bit result is placed in the PRODH:PRODL register pair. PRODH contains the high byte. Both W and 'f' are unchanged. None of the Status flags are affected. Note that neither overflow nor carry is possible in this operation. A zero result is possible but not detected. If 'a' is '0', the Access Bank is selected. If 'a' is '1', the BSR is used to select the GPR bank. If 'a' is '0' and the extended instruction set is enabled, this instruction operates in Indexed Literal Offset Addressing mode whenever f ≤ 95 (5Fh). See Byte-Oriented and Bit-Oriented Instructions in Indexed Literal Offset Mode for details.
Words	1
Cycles	1

Q Cycle Activity:

Q1	Q2	Q3	Q4
Decode	Read register 'f'	Process Data	Write registers PRODH:PRODL

Example: `MULWF REG, 1`

Before Instruction
W = C4h
REG = B5h
PRODH = ?
PRODL = ?

After Instruction
W = C4h
REG = B5h
PRODH = 8Ah
PRODL = 94h

NEGF	**Negate f**			
Syntax	`NEGF f {,a}`			
Operands	0 ≤ f ≤ 255 a ∈ [0, 1]			
Operation	$(\bar{f}) + 1 \rightarrow f$			
Status Affected	N, OV, C, DC, Z			
Encoding	0110	110a	ffff	ffff

.....continued	
NEGF	**Negate f**
Syntax	`NEGF f {,a}`
Description	Location 'f' is negated using two's complement. The result is placed in the data memory location 'f'. If 'a' is '0', the Access Bank is selected. If 'a' is '1', the BSR is used to select the GPR bank. If 'a' is '0' and the extended instruction set is enabled, this instruction operates in Indexed Literal Offset Addressing mode whenever f ≤ 95 (5Fh). See Byte-Oriented and Bit-Oriented Instructions in Indexed Literal Offset Mode for details.
Words	1
Cycles	1

Q Cycle Activity:

Q1	Q2	Q3	Q4
Decode	Read register 'f'	Process Data	Write register 'f'

Example: `NEGF REG, 1`

Before Instruction
REG = 0011 1010 [3Ah]

After Instruction
REG = 1100 0110 [C6h]

NOP	**No Operation**			
Syntax	`NOP`			
Operands	None			
Operation	No operation			
Status Affected	None			
Encoding	0000	0000	0000	0000
	1111	xxxx	xxxx	xxxx
Description	No operation.			
Words	1			
Cycles	1			

Q Cycle Activity:

Q1	Q2	Q3	Q4
Decode	No operation	No operation	No operation

Example: None.

POP	Pop Top of Return Stack			
Syntax	POP			
Operands	None			
Operation	(TOS) → bit bucket			
Status Affected	None			
Encoding	0000	0000	0000	0110
Description	The TOS value is pulled off the return stack and is discarded. The TOS value then becomes the previous value that was pushed onto the return stack. This instruction is provided to enable the user to properly manage the return stack to incorporate a software stack. (See PUSH instruction description).			
Words	1			
Cycles	1			

Q Cycle Activity:

Q1	Q2	Q3	Q4
Decode	No operation	POP TOS value	No operation

Example:

```
POP
GOTO    NEW
```

Before Instruction
TOS = 0031A2h
Stack (1 level down) = 014332h

After Instruction
TOS = 014332h
PC = address (NEW)

PUSH	Push Top of Return Stack			
Syntax	PUSH			
Operands	None			
Operation	(PC) + 2 → TOS			
Status Affected	None			
Encoding	0000	0000	0000	0101
Description	The PC + 2 is pushed onto the top of the return stack. The previous TOS value is pushed down on the stack. This instruction allows implementing a software stack by modifying TOS and then pushing it onto the return stack. (See POP instruction description).			
Words	1			
Cycles	1			

Q Cycle Activity:

Q1	Q2	Q3	Q4
Decode	PUSH PC + 2 onto return stack	No operation	No operation

Example: `PUSH`

Before Instruction
TOS = `00345Ah`
PC = `000124h`

After Instruction
TOS = `000126h`
PC = `000126h`
Stack (1 level down) = `00345Ah`

RCALL	Relative Call			
Syntax	`RCALL n`			
Operands	-1024 ≤ n ≤ 1023			
Operation	(PC) + 2 → TOS (PC) + 2 + 2n → PC			
Status Affected	None			
Encoding	1101	1nnn	nnnn	nnnn
Description	Subroutine call with a jump up to 1K from the current location. First, return address (PC + 2) is pushed onto the stack. Then, add the 2's complement number '2n' to the PC. Since the PC will have incremented to fetch the next instruction, the new address will be PC + 2 + 2n. This instruction is a 2-cycle instruction.			
Words	1			
Cycles	2			

Q Cycle Activity:

Q1	Q2	Q3	Q4
Decode	Read literal 'n' PUSH PC to stack	Process Data	Write to PC
No operation	No operation	No operation	No operation

Example: `HERE RCALL Jump`

Before Instruction
PC = address (`HERE`)

After Instruction
PC = address (`Jump`)
TOS = address (`HERE + 2`)

RESET	Reset			
Syntax	`RESET`			
Operands	None			
Operation	Reset all registers and flags that are affected by a $\overline{\text{MCLR}}$ Reset.			
Status Affected	All			
Encoding	0000	0000	1111	1111
Description	This instruction provides a way to execute a $\overline{\text{MCLR}}$ Reset by software.			
Words	1			
Cycles	1			

Q Cycle Activity:

Q1	Q2	Q3	Q4
Decode	Start Reset	No operation	No operation

Example: `RESET`

Before Instruction
All Registers = ?
All Flags = ?

After Instruction
All Registers = Reset Value
All Flags = Reset Value

RETFIE	Return from Interrupt			
Syntax	`RETFIE {s}`			
Operands	s ∈ [0, 1]			
Operation	(TOS) → PC If s = 1, context is restored into WREG, STATUS, BSR, FSR0H, FSR0L, FSR1H, FSR1L, FSR2H, FSR2L, PRODH, PRODL, PCLATH and PCLATU registers from the corresponding shadow registers. If s = 0, there is no change in status of any register. PCLATU, PCLATH are unchanged.			
Status Affected	STAT bits in INTCONx register			
Encoding	0000	0000	0001	000s

.....continued	
RETFIE	**Return from Interrupt**
Syntax	`RETFIE {s}`
Description	Return from interrupt. Stack is popped and Top-of-Stack (TOS) is loaded into the PC. Interrupts are enabled by setting either the high or low priority Global Interrupt Enable bit. If 's' = `1`, the contents of the shadow registers WREG_SHAD, STATUS_SHAD, BSR_SHAD, FSR0H_SHAD, FSR0L_SHAD, FSR1H_SHAD, FSR1L_SHAD, FSR2H_SHAD, FSR2L_SHAD, PRODH_SHAD, PRODL_SHAD, PCLATH_SHAD and PCLATU_SHAD are loaded into corresponding registers. There are two sets of shadow registers, main context and low context. The set retrieved on `RETFIE` instruction execution depends on what the state of operation of the CPU was when `RETFIE` was executed. If 's' = `0`, no update of these registers occurs (default). The upper and high address latches (PCLATU/H) remain unchanged.
Words	1
Cycles	2

Q Cycle Activity:

Q1	Q2	Q3	Q4
Decode	No operation	Process Data	POP PC from stack
No operation	No operation	No operation	No operation

Example: `RETFIE 1`

After Instruction
PC = (TOS)
WREG = (WREG_SHAD)
BSR = (BSR_SHAD)
STATUS = (STATUS_SHAD)
FSR0H/L = (FSR0H/L_SHAD)
FSR1H/L = (FSR1H/L_SHAD)
FSR2H/L = (FSR2H/L_SHAD)
PRODH/L = (PRODH/L_SHAD)
PCLATH/U = (PCLATH/U_SHAD)

RETLW	**Return literal to W**			
Syntax	`RETLW k`			
Operands	0 ≤ k ≤ 255			
Operation	k → W (TOS) → PC PCLATU, PCLATH are unchanged			
Status Affected	None			
Encoding	0000	1100	kkkk	kkkk
Description	W is loaded with the 8-bit literal 'k'. The Program Counter is loaded from the top of the stack (the return address). The upper and high address latches (PCLATU/H) remain unchanged.			
Words	1			

.....continued	
RETLW	**Return literal to W**
Syntax	`RETLW k`
Cycles	2

Q Cycle Activity:

Q1	Q2	Q3	Q4
Decode	Read literal 'k'	Process Data	POP PC from stack Write to W
No operation	No operation	No operation	No operation

Example:

```
    CALL   TABLE  ; W contains table offset value
BACK               ; W now has table value (after RETLW)
    :
    :
TABLE
    ADDWF  PCL    ; W - offset
    RETLW  k0     ; Begin table
    RETLW  k1     ;
    :
    :
    RETLW  kn     ; End of table
```

Before Instruction
W = 07h

After Instruction
W = value of kn

RETURN	**Return from Subroutine**			
Syntax	`RETURN {s}`			
Operands	s ∈ [0, 1]			
Operation	(TOS) → PC If s = 1 (WREG_CSHAD) → WREG (STATUS_CSHAD) → STATUS (BSR_CSHAD) → BSR PCLATU, PCLATH are unchanged			
Status Affected	None			
Encoding	0000	0000	0001	001s
Description	Return from subroutine. The stack is popped and the top of the stack (TOS) is loaded into the Program Counter. If 's'= 1, the contents of the shadow registers WREG_CSHAD, STATUS_CSHAD and BSR_CSHAD, are loaded into their corresponding registers. If 's' = 0, no update of these registers occurs (default). The upper and high address latches (PCLATU/H) remain unchanged.			
Words	1			
Cycles	2			

Q Cycle Activity:

Q1	Q2	Q3	Q4
Decode	No operation	Process Data	POP PC from stack
No operation	No operation	No operation	No operation

Example: `RETURN 1`

After Instruction
PC = (TOS)
WREG = (WREG_CSHAD)
BSR = (BSR_CSHAD)
STATUS = (STATUS_CSHAD)

RLCF	**Rotate Left f through Carry**			
Syntax	`RLCF f {,d {,a}}`			
Operands	0 ≤ f ≤ 255 d ∈ [0, 1] a ∈ [0, 1]			
Operation	(f<n>) → dest<n+1> (f<7>) → C (C) → dest<0>			
Status Affected	C, N, Z			
Encoding	0011	01da	ffff	ffff
Description	The contents of register 'f' are rotated one bit to the left through the CARRY flag. If 'd' is '0', the result is stored in W. If 'd' is '1', the result is stored back in the register 'f' (default). If 'a' is '0', the Access Bank is selected. If 'a' is '1', the BSR is used to select the GPR bank. If 'a' is '0' and the extended instruction set is enabled, this instruction operates in Indexed Literal Offset Addressing mode whenever f ≤ 95 (5Fh). See Byte-Oriented and Bit-Oriented Instructions in Indexed Literal Offset Mode for details. 			
Words	1			
Cycles	1			

Q Cycle Activity:

Q1	Q2	Q3	Q4
Decode	Read register 'f'	Process Data	Write to destination

Example: `RLCF REG, 0, 0`

Before Instruction
REG = 1110 0110 [E6h]
W = ?
C = 0

After Instruction
REG = 1110 0110 [E6h]
W = 1100 1100 [CCh]
C = 1

RLNCF	Rotate Left f (No Carry)			
Syntax	RLNCF f {,d {,a}}			
Operands	0 ≤ f ≤ 255 d ∈ [0, 1] a ∈ [0, 1]			
Operation	(f<n>) → dest<n+1> (f<7>) → dest<0>			
Status Affected	N, Z			
Encoding	0100	01da	ffff	ffff
Description	The contents of register 'f' are rotated one bit to the left. If 'd' is '0', the result is stored in W. If 'd' is '1', the result is stored back in the register 'f' (default). If 'a' is '0', the Access Bank is selected. If 'a' is '1', the BSR is used to select the GPR bank. If 'a' is '0' and the extended instruction set is enabled, this instruction operates in Indexed Literal Offset Addressing mode whenever f ≤ 95 (5Fh). See Byte-Oriented and Bit-Oriented Instructions in Indexed Literal Offset Mode for details. 			
Words	1			
Cycles	1			

Q Cycle Activity:

Q1	Q2	Q3	Q4
Decode	Read register 'f'	Process Data	Write to destination

Example: RLNCF REG, 1, 0

Before Instruction
REG = 1010 1011 [ABh]

After Instruction
REG = 0101 0111 [57h]

RRCF	Rotate Right f through Carry
Syntax	RRCF f {,d {,a}}
Operands	0 ≤ f ≤ 255 d ∈ [0, 1] a ∈ [0, 1]
Operation	(f<n>) → dest<n-1> (f<0>) → C (C) → dest<7>

.....continued				
RRCF	**Rotate Right f through Carry**			
Syntax	`RRCF f {,d {,a}}`			
Status Affected	C, N, Z			
Encoding	0011	00da	ffff	ffff
Description	The contents of register 'f' are rotated one bit to the right through the CARRY flag. If 'd' is '0', the result is stored in W. If 'd' is '1', the result is stored back in the register 'f' (default). If 'a' is '0', the Access Bank is selected. If 'a' is '1', the BSR is used to select the GPR bank. If 'a' is '0' and the extended instruction set is enabled, this instruction operates in Indexed Literal Offset Addressing mode whenever f ≤ 95 (5Fh). See Byte-Oriented and Bit-Oriented Instructions in Indexed Literal Offset Mode for details. 			
Words	1			
Cycles	1			

Q Cycle Activity:

Q1	Q2	Q3	Q4
Decode	Read register 'f'	Process Data	Write to destination

Example: `RRCF REG, 0, 0`

Before Instruction
REG = 1110 0110 [E6h]
W = ?
C = 0

After Instruction
REG = 1110 0110 [E6h]
W = 0111 0011 [73h]
C = 0

RRNCF	**Rotate Right f (No Carry)**			
Syntax	`RRNCF f {,d {,a}}`			
Operands	0 ≤ f ≤ 255 d ∈ [0, 1] a ∈ [0, 1]			
Operation	(f<n>) → dest<n-1> (f<0>) → dest<7>			
Status Affected	N, Z			
Encoding	0100	00da	ffff	ffff

.....continued	
RRNCF	**Rotate Right f (No Carry)**
Syntax	`RRNCF f {,d {,a}}`
Description	The contents of register 'f' are rotated one bit to the right. If 'd' is '0', the result is stored in W. If 'd' is '1', the result is stored back in the register 'f' (default). If 'a' is '0', the Access Bank is selected. If 'a' is '1', the BSR is used to select the GPR bank. If 'a' is '0' and the extended instruction set is enabled, this instruction operates in Indexed Literal Offset Addressing mode whenever f ≤ 95 (5Fh). See Byte-Oriented and Bit-Oriented Instructions in Indexed Literal Offset Mode for details.
Words	1
Cycles	1

Q Cycle Activity:

Q1	Q2	Q3	Q4
Decode	Read register 'f'	Process Data	Write to destination

Example 1: `RRNCF REG, 1, 0`

Before Instruction
REG = 1101 0111 [D7h]

After Instruction
REG = 1110 1011 [EBh]

Example 2: `RRNCF REG, 0, 0`

Before Instruction
REG = 1101 0111 [D7h]
W = ?

After Instruction
REG = 1101 0111 [D7h]
W = 1110 1011 [EBh]

SETF	**Set f**			
Syntax	`SETF f {,a}`			
Operands	0 ≤ f ≤ 255 a ∈ [0, 1]			
Operation	FFh → f			
Status Affected	None			
Encoding	0110	100a	ffff	ffff

.....continued	
SETF	**Set f**
Syntax	`SETF f {,a}`
Description	The contents of the specified register 'f' are set to FFh. If 'a' is '0', the Access Bank is selected. If 'a' is '1', the BSR is used to select the GPR bank. If 'a' is '0' and the extended instruction set is enabled, this instruction operates in Indexed Literal Offset Addressing mode whenever f ≤ 95 (5Fh). See Byte-Oriented and Bit-Oriented Instructions in Indexed Literal Offset Mode for details.
Words	1
Cycles	1

Q Cycle Activity:

Q1	Q2	Q3	Q4
Decode	Read register 'f'	Process Data	Write register 'f'

Example: `SETF REG, 1`

Before Instruction
REG = 5Ah

After Instruction
REG = FFh

SLEEP	Enter Sleep mode			
Syntax	`SLEEP`			
Operands	None			
Operation	00h → WDT 1 → $\overline{TO}$ 0 → $\overline{PD}$			
Status Affected	$\overline{TO}$, $\overline{PD}$			
Encoding	0000	0000	0000	0011
Description	The Power-down Status bit ($\overline{PD}$) is cleared. The Time-out Status bit ($\overline{TO}$) is set. Watchdog Timer is cleared. The processor is put into Sleep mode with the oscillator stopped.			
Words	1			
Cycles	1			

Q Cycle Activity:

Q1	Q2	Q3	Q4
Decode	No operation	Process Data	Go to Sleep

Example: `SLEEP`

Before Instruction
$\overline{TO}$ = ?
$\overline{PD}$ = ?

After Instruction
$\overline{TO}$ = 1 †
$\overline{PD}$ = 0

† If WDT causes wake-up, this bit is cleared.

SUBFSR	Subtract Literal from FSR			
Syntax	`SUBFSR fn, k`			
Operands	0 ≤ k ≤ 63 $f_n \in [0, 1, 2]$			
Operation	$(FSRf_n) - k \rightarrow FSRf_n$			
Status Affected	None			
Encoding	1110	1001	f_nf_nkk	kkkk
Description	The 6-bit literal 'k' is subtracted from the contents of the FSR specified by 'f_n'.			
Words	1			
Cycles	1			

Q Cycle Activity:

Q1	Q2	Q3	Q4
Decode	Read literal 'k'	Process Data	Write to FSR

Example: `SUBFSR 2, 23h`

Before Instruction
FSR2 = 03FFh

After Instruction
FSR2 = 03DCh

SUBFWB	Subtract f from W with borrow			
Syntax	`SUBFWB f {,d {,a}}`			
Operands	0 ≤ f ≤ 255 d ∈ [0, 1] a ∈ [0, 1]			
Operation	$(W) - (f) - (\overline{C}) \rightarrow dest$			
Status Affected	N, OV, C, DC, Z			
Encoding	0101	01da	ffff	ffff

.....continued	
SUBFWB	**Subtract f from W with borrow**
Syntax	`SUBFWB f {,d {,a}}`
Description	Subtract register 'f' and CARRY flag (borrow) from W (2's complement method). If 'd' is '0', the result is stored in W. If 'd' is '1', the result is stored back in the register 'f' (default). If 'a' is '0', the Access Bank is selected. If 'a' is '1', the BSR is used to select the GPR bank. If 'a' is '0' and the extended instruction set is enabled, this instruction operates in Indexed Literal Offset Addressing mode whenever f ≤ 95 (5Fh). See Byte-Oriented and Bit-Oriented Instructions in Indexed Literal Offset Mode for details.
Words	1
Cycles	1

Q Cycle Activity:

Q1	Q2	Q3	Q4
Decode	Read register 'f'	Process Data	Write to destination

Example 1: `SUBFWB REG, 1, 0`

Before Instruction
REG = 03h
W = 02h
C = 1

After Instruction
REG = FFh (2's complement)
W = 02h
C = 0
Z = 0
N = 1 (result is negative)

Example 2: `SUBFWB REG, 0, 0`

Before Instruction
REG = 02h
W = 05h
C = 1

After Instruction
REG = 02h
W = 03h
C = 1
Z = 0
N = 0 (result is positive)

Example 3: `SUBFWB REG, 1, 0`

Before Instruction
REG = 01h
W = 02h
C = 0

After Instruction
REG = 00h
W = 02h
C = 1
Z = 1 (result is zero)
N = 0

SUBLW	Subtract W from literal			
Syntax	SUBLW k			
Operands	0 ≤ k ≤ 255			
Operation	k – (W) → W			
Status Affected	N, OV, C, DC, Z			
Encoding	0000	1000	kkkk	kkkk
Description	W is subtracted from the 8-bit literal 'k'. The result is placed in W.			
Words	1			
Cycles	1			

Q Cycle Activity:

Q1	Q2	Q3	Q4
Decode	Read literal 'k'	Process Data	Write to W

Example 1: SUBLW 02h

Before Instruction
W = 01h
C = ?

After Instruction
W = 01h
C = 1 (result is positive)
Z = 0
N = 0

Example 2: SUBLW 02h

Before Instruction
W = 02h
C = ?

After Instruction
W = 00h
C = 1
Z = 1 (result is zero)
N = 0

Example 3: SUBLW 02h

Before Instruction
W = 03h
C = ?

After Instruction
W = FFh (2's complement)
C = 0
Z = 0
N = 1 (result is negative)

SUBWF	Subtract W from f			
Syntax	**SUBWF f {,d {,a}}**			
Operands	0 ≤ f ≤ 255 d ∈ [0, 1] a ∈ [0, 1]			
Operation	(f) – (W) → dest			
Status Affected	N, OV, C, DC, Z			
Encoding	0101	11da	ffff	ffff
Description	Subtract W from register 'f' (2's complement method). If 'd' is '0', the result is stored in W. If 'd' is '1', the result is stored back in the register 'f' (default). If 'a' is '0', the Access Bank is selected. If 'a' is '1', the BSR is used to select the GPR bank. If 'a' is '0' and the extended instruction set is enabled, this instruction operates in Indexed Literal Offset Addressing mode whenever f ≤ 95 (5Fh). See Byte-Oriented and Bit-Oriented Instructions in Indexed Literal Offset Mode for details.			
Words	1			
Cycles	1			

Q Cycle Activity:

Q1	Q2	Q3	Q4
Decode	Read register 'f'	Process Data	Write to destination

Example 1: SUBWF REG, 1, 0

Before Instruction
REG = 03h
W = 02h
C = ?

After Instruction
REG = 01h (2's complement)
W = 02h
C = 1 (result is positive)
Z = 0
N = 0

Example 2: SUBWF REG, 0, 0

Before Instruction
REG = 02h
W = 02h
C = ?

After Instruction
REG = 02h
W = 00h
C = 1
Z = 1 (result is zero)
N = 0

Example 3: SUBWF REG, 1, 0

Before Instruction
REG = 01h
W = 02h
C = ?

After Instruction
REG = FFh (2's complement)
W = 02h
C = 0
Z = 0
N = 1 (result is negative)

SUBWFB	Subtract W from f with Borrow			
Syntax	**SUBWFB f {,d {,a}}**			
Operands	0 ≤ f ≤ 255 d ∈ [0, 1] a ∈ [0, 1]			
Operation	(f) – (W) – ($\overline{C}$) → dest			
Status Affected	N, OV, C, DC, Z			
Encoding	0101	10da	ffff	ffff
Description	Subtract W and the CARRY flag (borrow) from register 'f' (2's complement method). If 'd' is '0', the result is stored in W. If 'd' is '1', the result is stored back in the register 'f' (default). If 'a' is '0', the Access Bank is selected. If 'a' is '1', the BSR is used to select the GPR bank. If 'a' is '0' and the extended instruction set is enabled, this instruction operates in Indexed Literal Offset Addressing mode whenever f ≤ 95 (5Fh). See Byte-Oriented and Bit-Oriented Instructions in Indexed Literal Offset Mode for details.			
Words	1			
Cycles	1			

Q Cycle Activity:

Q1	Q2	Q3	Q4
Decode	Read register 'f'	Process Data	Write to destination

Example 1: SUBWFB REG, 1, 0

Before Instruction
REG = 19h (0001 1001)
W = 0Dh (0000 1101)
C = 1

After Instruction
REG = 0Ch (0000 1100)
W = 0Dh (0000 1101)
C = 1 (result is positive)
Z = 0
N = 0

Example 2: SUBWFB REG, 0, 0

Before Instruction
REG = 1Bh (0001 1011)
W = 1Ah (0001 1010)
C = 0

After Instruction
REG = 1Bh (0001 1011)
W = 00h
C = 1
Z = 1 (result is zero)
N = 0

Example 3: SUBWFB REG, 1, 0

Before Instruction
REG = 03h (0000 0011)
W = 0Eh (0000 1110)
C = 1

After Instruction
REG = F5h (1111 0101) (2's complement)
W = 0Eh (0000 1110)
C = 0
Z = 0
N = 1 (result is negative)

SWAPF	Swap f			
Syntax	SWAPF f {,d {,a}}			
Operands	0 ≤ f ≤ 255 d ∈ [0, 1] a ∈ [0, 1]			
Operation	(f<3:0>) → dest<7:4> (f<7:4>) → dest<3:0>			
Status Affected	None			
Encoding	0011	10da	ffff	ffff
Description	The upper and lower nibbles of register 'f' are exchanged. If 'd' is '0', the result is stored in W. If 'd' is '1', the result is stored back in the register 'f' (default). If 'a' is '0', the Access Bank is selected. If 'a' is '1', the BSR is used to select the GPR bank. If 'a' is '0' and the extended instruction set is enabled, this instruction operates in Indexed Literal Offset Addressing mode whenever f ≤ 95 (5Fh). See Byte-Oriented and Bit-Oriented Instructions in Indexed Literal Offset Mode for details.			
Words	1			

.....continued	
SWAPF	**Swap f**
Syntax	`SWAPF f {,d {,a}}`
Cycles	1

Q Cycle Activity:

Q1	Q2	Q3	Q4
Decode	Read register 'f'	Process Data	Write to destination

Example: `SWAPF REG, 1, 0`

Before Instruction
REG = 53h

After Instruction
REG = 35h

TBLRD	**Table Read**			

Syntax	`TBLRD *`
	`TBLRD *+`
	`TBLRD *-`
	`TBLRD +*`			

Operands	None			
Operation	If `TBLRD *` (Prog Mem (TBLPTR)) → TABLAT TBLPTR – No Change If `TBLRD *+` (Prog Mem (TBLPTR)) → TABLAT (TBLPTR) + 1 → TBLPTR If `TBLRD *-` (Prog Mem (TBLPTR)) → TABLAT (TBLPTR) – 1 → TBLPTR If `TBLRD +*` (TBLPTR) + 1 → TBLPTR (Prog Mem (TBLPTR)) → TABLAT			
Status Affected	None			
Encoding	0000	0000	0000	10mm mm=0 * mm=1 *+ mm=2 *- mm=3 +*

.....continued	
TBLRD	**Table Read**

Syntax	`TBLRD *`
	`TBLRD *+`
	`TBLRD *-`
	`TBLRD +*`

Description	This instruction is used to read the contents of Program Memory. To address the program memory, a pointer called Table Pointer (TBLPTR) is used. The TBLPTR (a 21-bit pointer) points to each byte in the program memory. TBLPTR has a 2-Mbyte address range. TBLPTR[0] = `0`: Least Significant Byte of Program Memory Word TBLPTR[0] = `1`: Most Significant Byte of Program Memory Word The `TBLRD` instruction can modify the value of TBLPTR as follows: • no change (`TBLRD *`) • post-increment (`TBLRD *+`) • post-decrement (`TBLRD *-`) • pre-increment (`TBLRD +*`)
Words	1
Cycles	2

Q Cycle Activity:

Q1	Q2	Q3	Q4
Decode	No operation	No operation	No operation
No operation	No operation (Read Program Memory)	No operation	No operation (Write TABLAT)

Example 1: `TBLRD *+`

Before Instruction
TABLAT = `55h`
TBLPTR = `00A356h`
MEMORY (`00A356h`) = `34h`

After Instruction
TABLAT = `34h`
TBLPTR = `00A357h`

Example 2: `TBLRD +*`

Before Instruction
TABLAT = `AAh`
TBLPTR = `01A357h`
MEMORY (`01A357h`) = `12h`
MEMORY (`01A358h`) = `34h`

After Instruction
TABLAT = `34h`
TBLPTR = `01A358h`

TBLWT	Table Write			

Syntax	`TBLWT *`
	`TBLWT *+`
	`TBLWT *-`
	`TBLWT +*`			

Operands	None			
Operation	If `TBLWT *` (TABLAT) → Holding Register TBLPTR – No Change If `TBLWT *+` (TABLAT) → Holding Register (TBLPTR) + 1 → TBLPTR If `TBLWT *-` (TABLAT) → Holding Register (TBLPTR) – 1 → TBLPTR If `TBLWT +*` (TBLPTR) + 1 → TBLPTR (TABLAT) → Holding Register			
Status Affected	None			
Encoding	0000	0000	0000	11mm mm=0 * mm=1 *+ mm=2 *- mm=3 +*
Description	This instruction uses the three LSBs of TBLPTR to determine which of the eight holding registers the TABLAT is written to. The holding registers are used to program the contents of Program Memory. (Refer to the *"Program Flash Memory"* section for additional details on programming Flash memory.) The TBLPTR (a 21-bit pointer) points to each byte in the program memory. TBLPTR has a 2-Mbyte address range. The LSb of the TBLPTR selects which byte of the program memory location to access. TBLPTR[0] = 0: Least Significant Byte of Program Memory Word TBLPTR[0] = 1: Most Significant Byte of Program Memory Word The `TBLWT` instruction can modify the value of TBLPTR as follows: • no change (`TBLWT *`) • post-increment (`TBLWT *+`) • post-decrement (`TBLWT *-`) • pre-increment (`TBLWT +*`)			
Words	1			
Cycles	2			

Q Cycle Activity:

Q1	Q2	Q3	Q4
Decode	No operation	No operation	No operation

No operation	No operation (Read TABLAT)	No operation	No operation (Write to Holding Register)

Example 1: `TBLWT *+`

Before Instruction
TABLAT = 55h
TBLPTR = 00A356h
HOLDING REGISTER (00A356h) = FFh

After Instruction (table write completion)
TABLAT = 55h
TBLPTR = 00A357h
HOLDING REGISTER (00A356h) = 55h

Example 2: `TBLWT +*`

Before Instruction
TABLAT = 34h
TBLPTR = 01389Ah
HOLDING REGISTER (01389Ah) = FFh
HOLDING REGISTER (01389Bh) = FFh

After Instruction (table write completion)
TABLAT = 34h
TBLPTR = 01389Bh
HOLDING REGISTER (01389Ah) = FFh
HOLDING REGISTER (01389Bh) = 34h

TSTFSZ	**Test f, skip if 0**			
Syntax	**`TSTFSZ f {,a}`**			
Operands	$0 \le f \le 255$ $a \in [0, 1]$			
Operation	Skip if f = 0			
Status Affected	None			
Encoding	0110	011a	ffff	ffff
Description	If 'f' = 0, the next instruction fetched during the current instruction execution is discarded and a NOP is executed, making this a 2-cycle instruction. If 'a' is '0', the Access Bank is selected. If 'a' is '1', the BSR is used to select the GPR bank. If 'a' is '0' and the extended instruction set is enabled, this instruction operates in Indexed Literal Offset Addressing mode whenever f ≤ 95 (5Fh). See Byte-Oriented and Bit-Oriented Instructions in Indexed Literal Offset Mode for details.			
Words	1			
Cycles	1 (2) **Note:** 3 cycles if skip and followed by a 2-word instruction. 4 cycles if skip and followed by a 3-word instruction.			

Q Cycle Activity:

If no skip:

Q1	Q2	Q3	Q4
Decode	Read register 'f'	Process Data	No operation

If skip:

Q1	Q2	Q3	Q4
Decode	Read register 'f'	Process Data	No operation
No operation	No operation	No operation	No operation

If skip and followed by 2-word instruction:

Q1	Q2	Q3	Q4
Decode	Read register 'f'	Process Data	No operation
No operation	No operation	No operation	No operation
No operation	No operation	No operation	No operation

If skip and followed by 3-word instruction:

Q1	Q2	Q3	Q4
Decode	Read register 'f'	Process Data	No operation
No operation	No operation	No operation	No operation
No operation	No operation	No operation	No operation
No operation	No operation	No operation	No operation

Example:

```
HERE   TSTFSZ   CNT, 1
NZERO:
ZERO:
```

Before Instruction
PC = address (HERE)

After Instruction
If CNT = 0; PC = address (ZERO)
If CNT ≠ 0; PC = address (NZERO)

XORLW	Exclusive OR literal with W			
Syntax	XORLW k			
Operands	0 ≤ k ≤ 255			
Operation	(W) .XOR. k → W			
Status Affected	N, Z			
Encoding	0000	1010	kkkk	kkkk
Description	The contents of W are XORed with the 8-bit literal 'k'. The result is placed in W.			
Words	1			
Cycles	1			

Q Cycle Activity:

Q1	Q2	Q3	Q4
Decode	Read literal 'k'	Process Data	Write to W

Example: `XORLW 0AFh`

Before Instruction
W = `B5h`

After Instruction
W = `1Ah`

XORWF	Exclusive OR W with f			
Syntax	`XORWF f {,d {,a}}`			
Operands	0 ≤ f ≤ 255 d ∈ [0, 1] a ∈ [0, 1]			
Operation	(W) .XOR. (f) → dest			
Status Affected	N, Z			
Encoding	0001	10da	ffff	ffff
Description	Exclusive OR the contents of W with register 'f'. If 'd' is '0', the result is stored in W. If 'd' is '1', the result is stored back in the register 'f' (default). If 'a' is '0', the Access Bank is selected. If 'a' is '1', the BSR is used to select the GPR bank. If 'a' is '0' and the extended instruction set is enabled, this instruction operates in Indexed Literal Offset Addressing mode whenever f ≤ 95 (5Fh). See Byte-Oriented and Bit-Oriented Instructions in Indexed Literal Offset Mode for details.			
Words	1			
Cycles	1			

Q Cycle Activity:

Q1	Q2	Q3	Q4
Decode	Read register 'f'	Process Data	Write to destination

Example: `XORWF REG, 1, 0`

Before Instruction
REG = `AFh`
W = `B5h`

After Instruction
REG = `1Ah`
W = `B5h`

44.2 Extended Instruction Set

In addition to the standard instruction set, PIC18 devices also provide an optional extension to the core CPU functionality. The added features include additional instructions that augment Indirect and Indexed Addressing operations and the implementation of Indexed Literal Offset Addressing mode for many of the standard PIC18 instructions.

The additional features of the extended instruction set are disabled by default. To enable them, users must set the XINST Configuration bit.

The instructions in the extended set can all be classified as literal operations, which either manipulate the File Select registers, or use them for Indexed Addressing. Two of the standard instructions, ADDFSR and SUBFSR, each have an additional special instantiation for using FSR2 as extended instructions. These versions (ADDULNK and SUBULNK) allow for automatic return after execution.

The extended instructions are specifically implemented to optimize re-entrant program code (that is, code that is recursive or that uses a software stack) written in high-level languages, particularly C. Among other things, they allow users working in high-level languages to perform certain operations on data structures more efficiently. These include:

- Dynamic allocation and deallocation of software stack space when entering and leaving subroutines
- Function pointer invocation
- Software Stack Pointer manipulation
- Manipulation of variables located in a software stack

A summary of the instructions in the extended instruction set is provided in 44.2.1 Extended Instruction Syntax. Detailed descriptions are provided in 44.2.2 Extended Instruction Set. The opcode field descriptions in Table 44-1 apply to both the standard and extended PIC18 instruction sets.

Important: The instruction set extension and the Indexed Literal Offset Addressing mode were designed for optimizing applications written in C; the user may likely never use these instructions directly in assembler. The syntax for these commands is provided as a reference for users who may be reviewing code that has been generated by a compiler.

Important: Enabling the PIC18 instruction set extension may cause legacy applications to behave erratically or fail entirely. Refer to 44.2.3 Byte-Oriented and Bit-Oriented Instructions in Indexed Literal Offset Mode for details.

44.2.1 Extended Instruction Syntax

Most of the extended instructions use indexed arguments, using one of the File Select registers and some offset to specify a source or destination register. When an argument for an instruction serves as part of Indexed Addressing, it is enclosed in square brackets (“[ ]”). This is done to indicate that the argument is used as an index or offset. MPASM Assembler will flag an error if it determines that an index or offset value is not bracketed.

When the extended instruction set is enabled, brackets are also used to indicate index arguments in byte-oriented and bit-oriented instructions. This is in addition to other changes in their syntax. For more details, see 44.2.3.1 Extended Instruction Syntax with Standard PIC18 Commands.

Table 44-3. Extensions to the PIC18 Instruction Set

Mnemonic, Operands		Description	Cycles	16-Bit Instruction Word				Status Affected	Notes
				MSb			LSb		
ADDULNK	k	Add literal to FSR2 and return	2	1110	1000	11kk	kkkk	None	1, 3
MOVSF	z_s, f_d	Move z_s (12-bit source) to f_d (12-bit destination)	2	1110	1011	$0z_sz_sz_s$	$z_sz_sz_sz_s$	None	2, 3, 4
				1111	$f_df_df_df_d$	$f_df_df_df_d$	$f_df_df_df_d$		
MOVSFL	z_s, f_d	Move z_s (14-bit source) to f_d (14-bit destination)	3	0000	0000	0000	0010	None	2, 3
				1111	$xxxz_s$	$z_sz_sz_sz_s$	$z_sz_sf_df_d$		
				1111	$f_df_df_df_d$	$f_df_df_df_d$	$f_df_df_df_d$		
MOVSS	z_s, z_d	Move z_s (source) to z_d (destination)	2	1110	1011	$1z_sz_sz_s$	$z_sz_sz_sz_s$	None	2, 3
				1111	xxxx	$xz_dz_dz_d$	$z_dz_dz_dz_d$		
PUSHL	k	Store literal at FSR2, decrement FSR2	1	1110	1010	kkkk	kkkk	None	3
SUBULNK	k	Subtract literal from FSR2 and return	2	1110	1001	11kk	kkkk	None	1, 3

Notes:

1. If Program Counter (PC) is modified or a conditional test is true, the instruction requires an additional cycle. The extra cycle is executed as a NOP.
2. Some instructions are multi-word instructions. The extra words of these instructions will be decoded as a NOP, unless the first word of the instruction retrieves the information embedded in these 16-bits. This ensures that all program memory locations have a valid instruction.
3. Only available when extended instruction set is enabled.
4. f_s and f_d do not cover the full memory range. 2 MSbs of bank selection are forced to 0b00 to limit the range of these instructions to lower 4k addressing space.

© 2020 Microchip Technology Inc.

44.2.2 Extended Instruction Set

Important: All PIC18 instructions may take an optional label argument preceding the instruction mnemonic for use in symbolic addressing. If a label is used, the instruction format then becomes: `{label} instruction argument(s)`

ADDULNK	Add Literal to FSR2 and Return			
Syntax	`ADDULNK k`			
Operands	0 ≤ k ≤ 63			
Operation	(FSR2) + k → FSR2 (TOS) → PC			
Status Affected	None			
Encoding	1110	1000	11kk	kkkk
Description	The 6-bit literal 'k' is added to the contents of FSR2. A `RETURN` is then executed by loading the PC with the TOS. The instruction takes two cycles to execute; a `NOP` is performed during the second cycle. This may be thought of as a special case of the `ADDFSR` instruction, where f_n = 3 (binary '11'); it operates only on FSR2.			
Words	1			
Cycles	2			

Q Cycle Activity:

Q1	Q2	Q3	Q4
Decode	Read literal 'k'	Process Data	Write to destination
No operation	No operation	No operation	No operation

Example: `ADDULNK 23h`

Before Instruction
FSR2 = 03FFh
PC = 0100h

After Instruction
FSR2 = 0422h
PC = (TOS)

MOVSF	Move Indexed to f			
Syntax	`MOVSF [zs], fd`			
Operands	0 ≤ z_s ≤ 127 0 ≤ f_d ≤ 4095			
Operation	((FSR2) + z_s) → f_d			
Status Affected	None			
Encoding	1110	1011	$0z_sz_sz_s$	$z_sz_sz_sz_s$
	1111	$f_df_df_df_d$	$f_df_df_df_d$	$f_df_df_df_d$

.....continued	
MOVSF	**Move Indexed to f**
Syntax	`MOVSF [zs], fd`
Description	The contents of the source register are moved to destination register 'f_d'. The actual address of the source register is determined by adding the 7-bit literal offset 'z_s' in the first word to the value of FSR2. The address of the destination register is specified by the 12-bit literal 'f_d' in the second word. Both addresses can be anywhere in the 4096-byte data space (000h to FFFh). **Note:** MOVSF has curtailed the destination range to the lower 4 Kbyte space in memory (Banks 1 through 15). For everything else, use MOVSFL.
Words	2
Cycles	2

Q Cycle Activity:

Q1	Q2	Q3	Q4
Decode	Determine source address	Determine source address	Read source register
Decode	No operation No dummy read	No operation	Write register 'f_d'

Example: `MOVSF [05h], REG2`

Before Instruction
FSR2 = 80h
Contents of 85h = 33h
REG2 = 11h
Address of REG2 = 100h

After Instruction
FSR2 = 80h
Contents of 85h = 33h
REG2 = 33h
Address of REG2 = 100h

MOVSFL	**Move Indexed to f (Long Range)**			
Syntax	`MOVSFL [zs], fd`			
Operands	$0 \le z_s \le 127$ $0 \le f_d \le 16383$			
Operation	$((FSR2) + z_s) \rightarrow f_d$			
Status Affected	None			
Encoding	0000	0000	0110	0010
	1111	$xxxz_s$	$z_sz_sz_sz_s$	$z_sz_sf_df_d$
	1111	$f_df_df_df_d$	$f_df_df_df_d$	$f_df_df_df_d$

.....continued	
MOVSFL	**Move Indexed to f (Long Range)**
Syntax	`MOVSFL [zs], fd`
Description	The contents of the source register are moved to destination register 'f_d'. The actual address of the source register is determined by adding the 7-bit literal offset 'z_s' in the first word to the value of FSR2 (14 bits). The address of the destination register is specified by the 14-bit literal 'f_d' in the second word. Both addresses can be anywhere in the 16 Kbyte data space (0000h to 3FFFh). The MOVSFL instruction cannot use the PCL, TOSU, TOSH or TOSL as the destination register. If the resultant source address points to an indirect addressing register, the value returned will be 00h.
Words	3
Cycles	3

Q Cycle Activity:

Q1	Q2	Q3	Q4
Decode	No operation	No operation	No operation
Decode	Read source register	Process Data	No operation
Decode	No operation No dummy read	No operation	Write register 'f_d'

Example: `MOVSFL [05h], REG2`

Before Instruction
FSR2 = 2080h
Contents of 2085h = 33h
REG2 = 11h
Address of REG2 = 2000h

After Instruction
FSR2 = 2080h
Contents of 2085h = 33h
REG2 = 33h
Address of REG2 = 2000h

MOVSS	**Move Indexed to Indexed**			
Syntax	`MOVSS [zs], [zd]`			
Operands	$0 \le z_s \le 127$ $0 \le z_d \le 127$			
Operation	((FSR2) + z_s) → ((FSR2) + z_d)			
Status Affected	None			
Encoding	1110	1011	$1z_sz_sz_s$	$z_sz_sz_sz_s$
	1111	xxxx	$xz_dz_dz_d$	$z_dz_dz_dz_d$

.....continued	
MOVSS	**Move Indexed to Indexed**
Syntax	`MOVSS [zs], [zd]`
Description	The contents of the source register are moved to the destination register. The addresses of the source and destination registers are determined by adding the 7-bit literal offsets 'z_s' or 'z_d' respectively to the value of FSR2. Both registers can be located anywhere in the 16 Kbyte data memory space (`0000h` to `3FFFh`). The `MOVSS` instruction cannot use the PCL, TOSU, TOSH or TOSL as the destination register. If the resultant source address points to an indirect addressing register, the value returned will be `00h`. If the resultant destination address points to an indirect addressing register, the instruction will execute as a `NOP`.
Words	2
Cycles	2

Q Cycle Activity:

Q1	Q2	Q3	Q4
Decode	Determine source address	Determine source address	Read source register
Decode	Determine destination address	Determine destination address	Write to destination register

Example: `MOVSS [05h], [06h]`

Before Instruction
FSR2 = `80h`
Contents of `85h` = `33h`
Contents of `86h` = `11h`

After Instruction
FSR2 = `80h`
Contents of `85h` = `33h`
Contents of `86h` = `33h`

PUSHL	**Store Literal at FSR2, Decrement FSR2**			
Syntax	`PUSHL k`			
Operands	0 ≤ k ≤ 255			
Operation	k → FSR2 (FSR2) – 1 → FSR2			
Status Affected	None			
Encoding	`1111`	`1010`	`kkkk`	`kkkk`
Description	The 8-bit literal 'k' is written to the data memory address specified by FSR2. FSR2 is decremented by 1 after the operation. This instruction allows users to push values onto a software stack.			
Words	1			
Cycles	1			

Q Cycle Activity:

Q1	Q2	Q3	Q4
Decode	Read literal 'k'	Process Data	Write to destination

Example: PUSHL 08h

Before Instruction
FSR2 = 01ECh
Contents of 01ECh = 00h

After Instruction
FSR2 = 01EBh
Contents of 01ECh = 08h

SUBULNK	Subtract Literal from FSR2 and Return			
Syntax	**SUBULNK k**			
Operands	0 ≤ k ≤ 63			
Operation	(FSR2) – k → FSR2 (TOS) → PC			
Status Affected	None			
Encoding	1110	1001	11kk	kkkk
Description	The 6-bit literal 'k' is subtracted from the contents of FSR2. A RETURN is then executed by loading the PC with the TOS. The instruction takes two cycles to execute; a NOP is performed during the second cycle. This may be thought of as a special case of the SUBFSR instruction, where f_n = 3 (binary '11'); it operates only on FSR2.			
Words	1			
Cycles	2			

Q Cycle Activity:

Q1	Q2	Q3	Q4
Decode	Read literal 'k'	Process Data	Write to destination
No operation	No operation	No operation	No operation

Example: SUBULNK 23h

Before Instruction
FSR2 = 03FFh
PC = 0100h

After Instruction
FSR2 = 03DCh
PC = (TOS)

44.2.3 Byte-Oriented and Bit-Oriented Instructions in Indexed Literal Offset Mode

Important: Enabling the PIC18 instruction set extension may cause legacy applications to behave erratically or fail entirely.

In addition to the new commands in the extended set, enabling the extended instruction set also enables Indexed Literal Offset Addressing mode (Section *"Indexed Addressing with Literal Offset"* in *"Memory Organization"*). This has a significant impact on the way that many commands of the standard PIC18 instruction set are interpreted.

When the extended set is disabled, addresses embedded in opcodes are treated as literal memory locations: either as a location in the Access Bank ('a' = 0), or in a GPR bank designated by the BSR ('a' = 1). When the extended instruction set is enabled and 'a' = 0, however, a file register argument of 5Fh or less is interpreted as an offset from the pointer value in FSR2 and not as a literal address. For practical purposes, this means that all instructions that use the Access RAM bit as an argument – that is, all byte-oriented and bit-oriented instructions, or almost half of the core PIC18 instructions – may behave differently when the extended instruction set is enabled.

When the content of FSR2 is 00h, the boundaries of the Access RAM are essentially remapped to their original values. This may be useful in creating backward compatible code. If this technique is used, it may be necessary to save the value of FSR2 and restore it when moving back and forth between C and assembly routines in order to preserve the Stack Pointer. Users must also keep in mind the syntax requirements of the extended instruction set (see 44.2.3.1 Extended Instruction Syntax with Standard PIC18 Commands).

Although the Indexed Literal Offset Addressing mode can be very useful for dynamic stack and pointer manipulation, it can also be very annoying if a simple arithmetic operation is carried out on the wrong register. Users who are accustomed to the PIC18 programming must keep in mind that, when the extended instruction set is enabled, register addresses of 5Fh or less are used for Indexed Literal Offset Addressing.

Representative examples of typical byte-oriented and bit-oriented instructions in the Indexed Literal Offset Addressing mode are provided in the following section 44.2.4 Considerations when Enabling the Extended Instruction Set to show how execution is affected. The operand conditions shown in the examples are applicable to all instructions of these types.

Related Links

9.6 Data Memory and the Extended Instruction Set

44.2.3.1 Extended Instruction Syntax with Standard PIC18 Commands

When the extended instruction set is enabled, the file register argument, 'f', in the standard byte-oriented and bit-oriented commands is replaced with the literal offset value, 'k'. As already noted, this occurs only when 'f' is less than or equal to 5Fh. When an offset value is used, it must be indicated by square brackets ("[ ]"). As with the extended instructions, the use of brackets indicates to the compiler that the value is to be interpreted as an index or an offset. Omitting the brackets, or using a value greater than 5Fh within brackets, will generate an error in the MPASM assembler.

If the index argument is properly bracketed for Indexed Literal Offset Addressing, the Access RAM argument is never specified; it will automatically be assumed to be '0'. This is in contrast to standard operation (extended instruction set disabled) when 'a' is set on the basis of the target address. Declaring the Access RAM bit in this mode will also generate an error in the MPASM assembler.

The destination argument, 'd', functions as before.

In the latest versions of the MPASM™ assembler, language support for the extended instruction set must be explicitly invoked. This is done with either the command-line option, /y, or the PE directive in the source listing.

Related Links

9.6 Data Memory and the Extended Instruction Set

44.2.4 Considerations when Enabling the Extended Instruction Set

It is important to note that the extensions to the instruction set may not be beneficial to all users. In particular, users who are not writing code that uses a software stack may not benefit from using the extensions to the instruction set.

Additionally, the Indexed Literal Offset Addressing mode may create issues with legacy applications written to the PIC18 assembler. This is because instructions in the legacy code may attempt to address registers in the Access Bank below 5Fh. Since these addresses are interpreted as literal offsets to FSR2 when the instruction set extension is enabled, the application may read or write to the wrong data addresses.

When porting an application to a PIC18 device supporting extensions to the instruction set, it is very important to consider the type of code. A large, re-entrant application that is written in 'C' and would benefit from efficient compilation will do well when using the instruction set extensions. Legacy applications that heavily use the Access Bank will most likely not benefit from using the extended instruction set.

ADDWF	ADD W to Indexed (Indexed Literal Offset mode)			
Syntax	`ADDWF [k] {,d}`			
Operands	0 ≤ k ≤ 95 d ∈ [0, 1]			
Operation	(W) + ((FSR2) + k) → dest			
Status Affected	N, OV, C, DC, Z			
Encoding	0010	01d0	kkkk	kkkk
Description	The contents of W are added to the contents of the register indicated by FSR2, offset by the value 'k'. If 'd' is '0', the result is stored in W. If 'd' is '1', the result is stored back in the register 'f' (default).			
Words	1			
Cycles	1			

Q Cycle Activity:

Q1	Q2	Q3	Q4
Decode	Read literal 'k'	Process Data	Write to destination

Example: `ADDWF [OFST] , 0`

Before Instruction
W = 17h
OFST = 2Ch
FSR2 = 0A00h
Contents of 0A2Ch = 20h

After Instruction
W = 37h
Contents of 0A2Ch = 20h

BSF	Bit Set Indexed (Indexed Literal Offset mode)
Syntax	`BSF [k], b`
Operands	0 ≤ k ≤ 95 0 ≤ b ≤ 7
Operation	1 → ((FSR2) + k)<b>

.....continued				
BSF	**Bit Set Indexed (Indexed Literal Offset mode)**			
Syntax	`BSF [k], b`			
Status Affected	None			
Encoding	1000	bbb0	kkkk	kkkk
Description	Bit 'b' of the register indicated by FSR2, offset by the value 'k', is set.			
Words	1			
Cycles	1			

Q Cycle Activity:

Q1	Q2	Q3	Q4
Decode	Read literal 'k'	Process Data	Write to destination

Example: `BSF [FLAG_OFST], 7`

Before Instruction
FLAG_OFST = 0Ah
FSR2 = 0A00h
Contents of 0A0Ah = 55h

After Instruction
Contents of 0A0Ah = D5h

SETF	Set Indexed (Indexed Literal Offset mode)			
Syntax	`SETF [k]`			
Operands	0 ≤ k ≤ 95			
Operation	FFh → ((FSR2) + k)			
Status Affected	None			
Encoding	0110	1000	kkkk	kkkk
Description	The contents of the register indicated by FSR2, offset by the value 'k', are set to FFh.			
Words	1			
Cycles	1			

Q Cycle Activity:

Q1	Q2	Q3	Q4
Decode	Read literal 'k'	Process Data	Write to destination

Example: `SETF [OFST]`

Before Instruction
OFST = 2Ch
FSR2 = 0A00h
Contents of 0A2Ch = 00h

After Instruction
Contents of 0A2Ch = FFh

44.2.5 Special Considerations with Microchip MPLAB® IDE Tools

The latest versions of Microchip's software tools have been designed to fully support the extended instruction set on the PIC18 devices. This includes the MPLAB XC8 C compiler, MPASM assembler and MPLAB X Integrated Development Environment (IDE).

When selecting a target device for software development, MPLAB X IDE will automatically set default Configuration bits for that device. The default setting for the XINST Configuration bit is '0', disabling the extended instruction set and Indexed Literal Offset Addressing mode. For proper execution of applications developed to take advantage of the extended instruction set, XINST must be set during programming.

To develop software for the extended instruction set, the user must enable support for the instructions and the Indexed Addressing mode in their language tool(s). Depending on the environment being used, this may be done in several ways:

- A menu option, or dialog box within the environment, that allows the user to configure the language tool and its settings for the project
- A command-line option
- A directive in the source code

These options vary between different compilers, assemblers and development environments. Users are encouraged to review the documentation accompanying their development systems for the appropriate information.

45. ICSP™ - In-Circuit Serial Programming™

ICSP programming allows customers to manufacture circuit boards with unprogrammed devices. Programming can be done after the assembly process, allowing the device to be programmed with the most recent firmware or a custom firmware. Five pins are needed for ICSP programming:

- ICSPCLK
- ICSPDAT
- $\overline{MCLR}/V_{PP}$
- V_{DD}
- V_{SS}

In Program/Verify mode the program memory, User IDs and the Configuration bits are programmed through serial communications. The ICSPDAT pin is a bidirectional I/O used for transferring the serial data and the ICSPCLK pin is the clock input. For more information on ICSP refer to the **"Family Programming Specification"**

45.1 High-Voltage Programming Entry Mode

The device is placed into High-Voltage Programming Entry mode by holding the ICSPCLK and ICSPDAT pins low then raising the voltage on $\overline{MCLR}/V_{PP}$ to V_{IHH}.

45.2 Low-Voltage Programming Entry Mode

The Low-Voltage Programming Entry mode allows the PIC® Flash MCUs to be programmed using V_{DD} only, without high voltage. When the LVP Configuration bit is set to '1', the low-voltage ICSP programming entry is enabled. To disable the Low-Voltage ICSP mode, the LVP bit must be programmed to '0'.

Entry into the Low-Voltage Programming Entry mode requires the following steps:

1. $\overline{MCLR}$ is brought to Vil.
2. A 32-bit key sequence is presented on ICSPDAT, while clocking ICSPCLK.

Once the key sequence is complete, $\overline{MCLR}$ must be held at V_{IL} for as long as Program/Verify mode is to be maintained.

If low-voltage programming is enabled (LVP = 1), the $\overline{MCLR}$ Reset function is automatically enabled and cannot be disabled. See the $\overline{MCLR}$ Section for more information.

The LVP bit can only be reprogrammed to '0' by using the High-Voltage Programming mode.

45.3 Common Programming Interfaces

Connection to a target device is typically done through an ICSP header. A commonly found connector on development tools is the RJ-11 in the 6P6C (6-pin, 6-connector) configuration. See Figure 45-1.

Figure 45-1. ICD RJ-11 Style Connector Interface

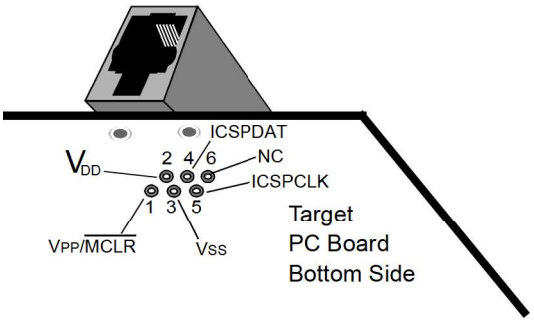

Pin Description

1 = $V_{PP}/\overline{MCLR}$

2 = V_{DD} Target

3 = V_{SS} (ground)

4 = ICSPDAT

5 = ICSPCLK

6 = No Connect

Another connector often found in use with the PICkit™ programmers is a standard 6-pin header with 0.1 inch spacing. Refer to Figure 45-2.

For additional interface recommendations, refer to the specific device programmer manual prior to PCB design.

It is recommended that isolation devices be used to separate the programming pins from other circuitry. The type of isolation is highly dependent on the specific application and may include devices such as resistors, diodes, or even jumpers. See Figure 45-3 for more information.

Figure 45-2. PICkit™ Programmer Style Connector Interface

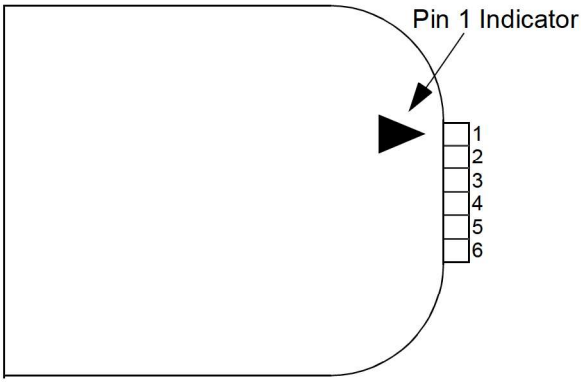

Pin Description(1):

1 = $V_{PP}/\overline{MCLR}$

2 = V_{DD} Target

3 = V_{SS} (ground)

4 = ICSPDAT

5 = ICSPCLK

6 = No Connect

Note:

1. The 6-pin header (0.100" spacing) accepts 0.025" square pins.

Figure 45-3. Typical Connection for ICSP™ Programming

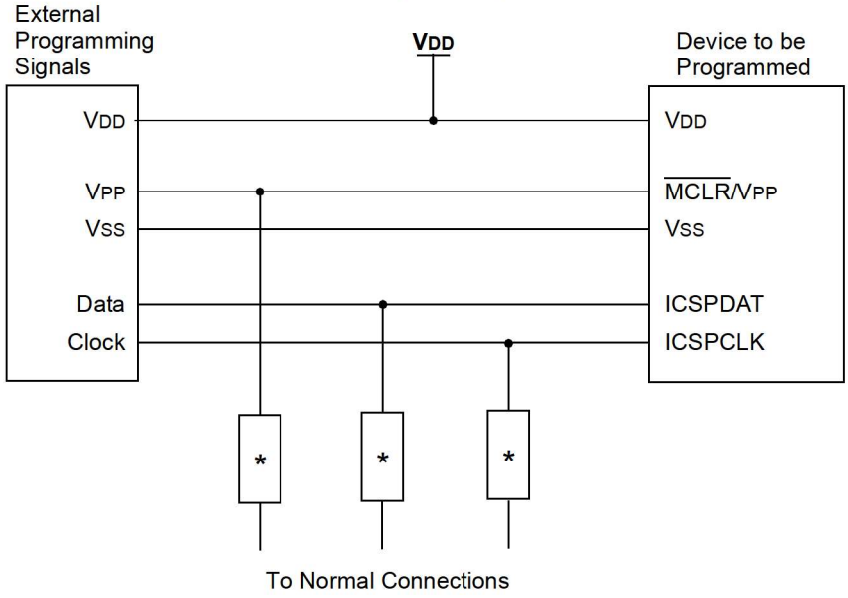

* Isolation devices (as required).

46. Register Summary

Address	Name	Bit Pos.	7	6	5	4	3	2	1	0
0x00 ... 0x38	Reserved									
0x39	CLKRCON	7:0	EN			DC[1:0]		DIV[2:0]		
0x3A	CLKRCLK	7:0					CLK[3:0]			
0x3B ... 0x3F	Reserved									
0x40	NVMCON0	7:0								GO
0x41	NVMCON1	7:0	WRERR					NVMCMD[2:0]		
0x42	NVMLOCK	7:0	NVMLOCK[7:0]							
0x43	NVMADR	7:0	NVMADR[7:0]							
		15:8	NVMADR[15:8]							
		23:16			NVMADR[21:16]					
0x46	NVMDAT	7:0	NVMDAT[7:0]							
		15:8	NVMDAT[15:8]							
0x48	VREGCON	7:0			PMSYS[1:0]				VREGPM[1:0]	
0x49	BORCON	7:0	SBOREN							BORRDY
0x4A	HLVDCON0	7:0	EN		OUT	RDY			INTH	INTL
0x4B	HLVDCON1	7:0					SEL[3:0]			
0x4C	ZCDCON	7:0	SEN		OUT	POL			INTP	INTN
0x4D ... 0x62	Reserved									
0x63	PMD0	7:0	SYSCMD	FVRMD	HLVDMD	CRCMD	SCANMD		CLKRMD	IOCMD
0x64	PMD1	7:0	C1MD	ZCDMD	SMT1MD	TMR4MD	TMR3MD	TMR2MD	TMR1MD	TMR0MD
0x65	PMD2	7:0	CCP1MD	CWG1MD	DSM1MD	NCO1MD	ACTMD	DAC1MD	ADCMD	C1MD
0x66	PMD3	7:0	U2MD	U1MD	SPI2MD	SPI1MD	I2C1MD	PWM3MD	PWM2MD	PWM1MD
0x67	PMD4	7:0	DMA3MD	DMA2MD	DMA1MD	CLC4MD	CLC3MD	CLC2MD	CLC1MD	U3MD
0x68	PMD5	7:0							DAC2MD	DMA4MD
0x69	Reserved									
0x6A	MD1CON0	7.0	EN		OUT	OPOL				BIT
0x6B	MD1CON1	7:0			CHPOL	CHSYNC			CLPOL	CLSYNC
0x6C	MD1SRC	7:0				MS[4:0]				
0x6D	MD1CARL	7:0					CL[3:0]			
0x6E	MD1CARH	7:0					CH[3:0]			
0x6F	CMOUT	7:0							C2OUT	C1OUT
0x70	CM1CON0	7:0	EN	OUT		POL			HYS	SYNC
0x71	CM1CON1	7:0							INTP	INTN
0x72	CM1NCH	7:0						NCH[2:0]		
0x73	CM1PCH	7:0						PCH[2:0]		
0x74	CM2CON0	7:0	EN	OUT		POL			HYS	SYNC
0x75	CM2CON1	7:0							INTP	INTN
0x76	CM2NCH	7:0						NCH[2:0]		
0x77	CM2PCH	7:0						PCH[2:0]		
0x78	WDTCON0	7:0			PS[4:0]					SEN
0x79	WDTCON1	7:0		CS[2:0]				WINDOW[2:0]		
0x7A	WDTPSL	7:0	PSCNTL[7:0]							
0x7B	WDTPSH	7:0	PSCNTH[7:0]							
0x7C	WDTTMR	7:0	TMR[4:0]					STATE	PSCNT[17:16]	
0x7D	DAC1DATL	7:0	DAC1R[7:0]							
0x7E	Reserved									
0x7F	DAC1CON	7:0	EN		OE[1:0]		PSS[1:0]			NSS
0x80	SPI1RXB	7:0	RXB[7:0]							
0x81	SPI1TXB	7:0	TXB[7:0]							

.....continued

Address	Name	Bit Pos.	7	6	5	4	3	2	1	0
0x82	SPI1TCNT	7:0	TCNTL[7:0]							
		15:8						TCNTH[2:0]		
0x84	SPI1CON0	7:0	EN					LSBF	MST	BMODE
0x85	SPI1CON1	7:0	SMP	CKE	CKP	FST		SSP	SDIP	SDOP
0x86	SPI1CON2	7:0	BUSY	SSFLT				SSET	TXR	RXR
0x87	SPI1STATUS	7:0	TXWE		TXBE		RXRE	CLB		RXBF
0x88	SPI1TWIDTH	7:0						TWIDTH[2:0]		
0x89	SPI1BAUD	7:0	BAUD[7:0]							
0x8A	SPI1INTF	7:0	SRMTIF	TCZIF	SOSIF	EOSIF		RXOIF	TXUIF	
0x8B	SPI1INTE	7:0	SRMTIE	TCZIE	SOSIE	EOSIE		RXOIE	TXUIE	
0x8C	SPI1CLK	7:0					CLKSEL[3:0]			
0x8D	SPI2RXB	7:0	RXB[7:0]							
0x8E	SPI2TXB	7:0	TXB[7:0]							
0x8F	SPI2TCNT	7:0	TCNTL[7:0]							
		15.8						TCNTH[2.0]		
0x91	SPI2CON0	7:0	EN					LSBF	MST	BMODE
0x92	SPI2CON1	7:0	SMP	CKE	CKP	FST		SSP	SDIP	SDOP
0x93	SPI2CON2	7:0	BUSY	SSFLT				SSET	TXR	RXR
0x94	SPI2STATUS	7:0	TXWE		TXBE		RXRE	CLB		RXBF
0x95	SPI2TWIDTH	7:0						TWIDTH[2:0]		
0x96	SPI2BAUD	7:0	BAUD[7:0]							
0x97	SPI2INTF	7:0	SRMTIF	TCZIF	SOSIF	EOSIF		RXOIF	TXUIF	
0x98	SPI2INTE	7:0	SRMTIE	TCZIE	SOSIE	EOSIE		RXOIE	TXUIE	
0x99	SPI2CLK	7:0					CLKSEL[3:0]			
0x9A ... 0x9F	Reserved									
0xA0	DAC2DATL	7:0	DAC2R[7:0]							
0xA1	Reserved									
0xA2	DAC2CON	7:0	EN				PSS[1:0]			NSS
0xA3 ... 0xAB	Reserved									
0xAC	ACTCON	7:0	ACTEN	ACTUD			ACTLOCK		ACTORS	
0xAD	OSCCON1	7:0		NOSC[2:0]			NDIV[3:0]			
0xAE	OSCCON2	7:0		COSC[2:0]			CDIV[3:0]			
0xAF	OSCCON3	7:0	CSWHOLD	SOSCPWR		ORDY	NOSCR			
0xB0	OSCTUNE	7:0			TUN[5:0]					
0xB1	OSCFRQ	7:0					FRQ[3:0]			
0xB2	OSCSTAT	7:0	EXTOR	HFOR	MFOR	LFOR	SOR	ADOR		PLLR
0xB3	OSCEN	7:0	EXTOEN	HFOEN	MFOEN	LFOEN	SOSCEN	ADOEN		PLLEN
0xB4	PRLOCK	7:0								PRLOCKED
0xB5	SCANPR	7:0						PR[2:0]		
0xB6	DMA1PR	7:0						PR[2:0]		
0xB7	DMA2PR	7:0						PR[2:0]		
0xB8	DMA3PR	7:0						PR[2:0]		
0xB9	DMA4PR	7:0						PR[2:0]		
0xBA ... 0xBD	Reserved									
0xBE	MAINPR	7:0						PR[2:0]		
0xBF	ISRPR	7:0						PR[2:0]		
0xC0 ... 0xD3	Reserved									
0xD4	CLCDATA	7:0					CLC4OUT	CLC3OUT	CLC2OUT	CLC1OUT
0xD5	CLCSELECT	7:0							SLCT[1:0]	
0xD6	CLCnCON	7:0	EN		OUT	INTP	INTN	MODE[2:0]		
0xD7	CLCnPOL	7:0	POL				G4POL	G3POL	G2POL	G1POL

.....continued

Address	Name	Bit Pos.	7	6	5	4	3	2	1	0
0xD8	CLCnSEL0	7:0		D1S[6:0]						
0xD9	CLCnSEL1	7:0		D2S[6:0]						
0xDA	CLCnSEL2	7:0		D3S[6:0]						
0xDB	CLCnSEL3	7:0		D4S[6:0]						
0xDC	CLCnGLS0	7:0	G1D4T	G1D4N	G1D3T	G1D3N	G1D2T	G1D2N	G1D1T	G1D1N
0xDD	CLCnGLS1	7:0	G2D4T	G2D4N	G2D3T	G2D3N	G2D2T	G2D2N	G2D1T	G2D1N
0xDE	CLCnGLS2	7:0	G3D4T	G3D4N	G3D3T	G3D3N	G3D2T	G3D2N	G3D1T	G3D1N
0xDF	CLCnGLS3	7:0	G4D4T	G4D4N	G4D3T	G4D3N	G4D2T	G4D2N	G4D1T	G4D1N
0xE0 ... 0xE7	Reserved									
0xE8	DMASELECT	7:0						SLCT[2:0]		
0xE9	DMAnBUF	7:0	BUF[7:0]							
0xEA	DMAnDCNT	7:0	DCNT[7:0]							
		15:8					DCNT[11:8]			
0xEC	DMAnDPTR	7:0	DPTR[7:0]							
		15:8	DPTR[15:8]							
0xEE	DMAnDSZ	7:0	DSZ[7:0]							
		15:8					DSZ[11:8]			
0xF0	DMAnDSA	7:0	DSA[7:0]							
		15:8	DSA[15:8]							
0xF2	DMAnSCNT	7:0	SCNT[7:0]							
		15:8					SCNT[11:8]			
0xF4	DMAnSPTR	7:0	SPTR[7:0]							
		15:8	SPTR[15:8]							
		23:16			SPTR[21:16]					
0xF7	DMAnSSZ	7:0	SSZ[7:0]							
		15:8					SSZ[11:8]			
0xF9	DMAnSSA	7:0	SSA[7:0]							
		15:8	SSA[15:8]							
		23:16			SSA[21:16]					
0xFC	DMAnCON0	7:0	EN	SIRQEN	DGO			AIRQEN		XIP
0xFD	DMAnCON1	7:0	DMODE[1:0]		DSTP	SMR[1:0]		SMODE[1:0]		SSTP
0xFE	DMAnAIRQ	7:0	AIRQ[7:0]							
0xFF	DMAnSIRQ	7:0	SIRQ[7:0]							
0x0100 ... 0x01FF	Reserved									
0x0200	PPSLOCK	7:0								PPSLOCKED
0x0201	RA0PPS	7:0			RA0PPS[5:0]					
0x0202	RA1PPS	7:0			RA1PPS[5:0]					
0x0203	RA2PPS	7:0			RA2PPS[5:0]					
0x0204	Reserved									
0x0205	RA4PPS	7:0			RA4PPS[5:0]					
0x0206	RA5PPS	7:0			RA5PPS[5:0]					
0x0207 ... 0x020C	Reserved									
0x020D	RB4PPS	7:0			RB4PPS[5:0]					
0x020E	RB5PPS	7:0			RB5PPS[5:0]					
0x020F	RB6PPS	7:0			RB6PPS[5:0]					
0x0210	RB7PPS	7:0			RB7PPS[5:0]					
0x0211	RC0PPS	7:0			RC0PPS[5:0]					
0x0212	RC1PPS	7:0			RC1PPS[5:0]					
0x0213	RC2PPS	7:0			RC2PPS[5:0]					
0x0214	RC3PPS	7:0			RC3PPS[5:0]					
0x0215	RC4PPS	7:0			RC4PPS[5:0]					
0x0216	RC5PPS	7:0			RC5PPS[5:0]					
0x0217	RC6PPS	7:0			RC6PPS[5:0]					

.....continued

Address	Name	Bit Pos.	7	6	5	4	3	2	1	0
0x0218	RC7PPS	7:0			RC7PPS[5:0]					
0x0219 ... 0x023D	Reserved									
0x023E	INT0PPS	7:0					PORT	PIN[2:0]		
0x023F	INT1PPS	7:0				PORT[1:0]		PIN[2:0]		
0x0240	INT2PPS	7:0			PORT[2:0]			PIN[2:0]		
0x0241	T0CKIPPS	7:0			PORT[2:0]			PIN[2:0]		
0x0242	T1CKIPPS	7:0			PORT[2:0]			PIN[2:0]		
0x0243	T1GPPS	7:0			PORT[2:0]			PIN[2:0]		
0x0244	T3CKIPPS	7:0			PORT[2:0]			PIN[2:0]		
0x0245	T3GPPS	7:0			PORT[2:0]			PIN[2:0]		
0x0246 ... 0x0247	Reserved									
0x0248	T2INPPS	7:0			PORT[2:0]			PIN[2:0]		
0x0249	T4INPPS	7:0			PORT[2:0]			PIN[2:0]		
0x024A ... 0x024E	Reserved									
0x024F	CCP1PPS	7:0			PORT[2:0]			PIN[2:0]		
0x0250	Reserved									
0x0251	PWM1ERSPPS	7:0				PORT[1:0]		PIN[2:0]		
0x0252	PWM2ERSPPS	7:0			PORT[2:0]			PIN[2:0]		
0x0253	PWM3ERSPPS	7:0				PORT[1:0]		PIN[2:0]		
0x0254 ... 0x0256	Reserved									
0x0257	PWMIN0PPS	7:0			PORT[2:0]			PIN[2:0]		
0x0258	PWMIN1PPS	7:0			PORT[2:0]			PIN[2:0]		
0x0259	SMT1WINPPS	7:0			PORT[2:0]			PIN[2:0]		
0x025A	SMT1SIGPPS	7:0			PORT[2:0]			PIN[2:0]		
0x025B	CWGxPPS	7:0			PORT[2:0]			PIN[2:0]		
0x025C ... 0x025D	Reserved									
0x025E	MD1CARLPPS	7:0			PORT[2:0]			PIN[2:0]		
0x025F	MD1CARHPPS	7:0			PORT[2:0]			PIN[2:0]		
0x0260	MD1SRCPPS	7:0			PORT[2:0]			PIN[2:0]		
0x0261	CLCIN0PPS	7:0			PORT[2:0]			PIN[2:0]		
0x0262	CLCIN1PPS	7:0			PORT[2:0]			PIN[2:0]		
0x0263	CLCIN2PPS	7:0			PORT[2:0]			PIN[2:0]		
0x0264	CLCIN3PPS	7:0			PORT[2:0]			PIN[2:0]		
0x0265 ... 0x0268	Reserved									
0x0269	ADACTPPS	7:0			PORT[2:0]			PIN[2:0]		
0x026A	SPI1SCKPPS	7:0			PORT[2:0]			PIN[2:0]		
0x026B	SPI1SDIPPS	7:0			PORT[2:0]			PIN[2:0]		
0x026C	SPI1SSPPS	7:0			PORT[2:0]			PIN[2:0]		
0x026D	SPI2SCKPPS	7:0			PORT[2:0]			PIN[2:0]		
0x026E	SPI2SDIPPS	7:0			PORT[2:0]			PIN[2:0]		
0x026F	SPI2SSPPS	7:0			PORT[2:0]			PIN[2:0]		
0x0270	I2C1SDAPPS	7:0			PORT[2:0]			PIN[2:0]		
0x0271	I2C1SCLPPS	7:0			PORT[2:0]			PIN[2:0]		
0x0272	U1RXPPS	7:0				PORT[1:0]		PIN[2:0]		
0x0273	U1CTSPPS	7:0				PORT[1:0]		PIN[2:0]		
0x0274	U1RXPPS	7:0					PORT	PIN[2:0]		
0x0275	U1CTSPPS	7:0					PORT	PIN[2:0]		

.....continued

Address	Name	Bit Pos.	7	6	5	4	3	2	1	0
0x0276	U3RXPPS	7:0				PORT[1:0]		PIN[2:0]		
0x0277	U3CTSPPS	7:0				PORT[1:0]		PIN[2:0]		
0x0278 ... 0x0285	Reserved									
0x0286	RB6I2C	7:0	SLEW[1:0]		PU[1:0]				TH[1:0]	
0x0287	RB4I2C	7:0	SLEW[1:0]		PU[1:0]				TH[1:0]	
0x0288	RC1I2C	7:0	SLEW[1:0]		PU[1:0]				TH[1:0]	
0x0289	RC0I2C	7:0	SLEW[1:0]		PU[1:0]				TH[1:0]	
0x028A	I2C1RXB	7:0	RXB[7:0]							
0x028B	I2C1TXB	7:0	TXB[7:0]							
0x028C	I2C1CNT	7:0	CNT[7:0]							
		15:8	CNT[15:8]							
0x028E	I2C1ADB0	7:0	ADB[7:0]							
0x028F	I2C1ADB1	7:0	ADB[7:0]							
0x0290	I2C1ADR0	7:0	ADR[7:0]							
0x0291	I2C1ADR1	7:0	ADR[6:0]							
0x0292	I2C1ADR2	7:0	ADR[7:0]							
0x0293	I2C1ADR3	7:0	ADR[6:0]							
0x0294	I2C1CON0	7:0	EN	RSEN	S	CSTR	MDR	MODE[2:0]		
0x0295	I2C1CON1	7:0	ACKCNT	ACKDT	ACKSTAT	ACKT	P	RXO	TXU	CSD
0x0296	I2C1CON2	7:0	ACNT	GCEN	FME	ABD	SDAHT[1:0]		BFRET[1:0]	
0x0297	I2C1ERR	7:0		BTOIF	BCLIF	NACKIF		BTOIE	BLCIE	NACKIE
0x0298	I2C1STAT0	7:0	BFRE	SMA	MMA	R	D			
0x0299	I2C1STAT1	7:0	TXWE		TXBE		RXRE	CLRBF		RXBF
0x029A	I2C1PIR	7:0	CNTIF	ACKTIF		WRIF	ADRIF	PCIF	RSCIF	SCIF
0x029B	I2C1PIE	7:0	CNTIE	ACKTIE		WRIE	ADRIE	PCIE	RSCIE	SCIE
0x029C	I2C1BTO	7:0	TOREC	TOBY32	TOTIME[5:0]					
0x029D	I2C1BAUD	7:0	BAUD[7:0]							
0x029E	I2C1CLK	7:0					CLK[3:0]			
0x029F	I2C1BTOC	7:0						BTOC[2:0]		
0x02A0	Reserved									
0x02A1	U1RXB	7:0	RXB[7:0]							
0x02A2	U1RXCHK	7:0	RXCHK[7:0]							
0x02A3	U1TXB	7:0	TXB[7:0]							
0x02A4	U1TXCHK	7:0	TXCHK[7:0]							
0x02A5	U1P1	7:0	P1[7:0]							
		15:8								P1[8]
0x02A7	U1P2	7:0	P2[7:0]							
		15:8								P2[8]
0x02A9	U1P3	7:0	P3[7:0]							
		15:8								P3[8]
0x02AB	U1CON0	7:0	BRGS	ABDEN	TXEN	RXEN	MODE[3:0]			
0x02AC	U1CON1	7:0	ON			WUE	RXBIMD		BRKOVR	SENDB
0x02AD	U1CON2	7:0	RUNOVF	RXPOL	STP[1:0]		C0EN	TXPOL	FLO[1:0]	
0x02AE	U1BRG	7:0	BRG[7:0]							
		15:8	BRG[15:8]							
0x02B0	U1FIFO	7:0	TXWRE	STPMD	TXBE	TXBF	RXIDL	XON	RXBE	RXBF
0x02B1	U1UIR	7:0	WUIF	ABDIF				ABDIE		
0x02B2	U1ERRIR	7:0	TXMTIF	PERIF	ABDOVF	CERIF	FERIF	RXBKIF	RXFOIF	TXCIF
0x02B3	U1ERRIE	7:0	TXMTIE	PERIE	ABDOVE	CERIE	FERIE	RXBKIE	RXFOIE	TXCIE
0x02B4	U2RXB	7:0	RXB[7:0]							
0x02B5	Reserved									
0x02B6	U2TXB	7:0	TXB[7:0]							
0x02B7	Reserved									
0x02B8	U2P1	7:0	P1[7:0]							
		15:8								
0x02BA	U2P2	7:0	P2[7:0]							
		15:8								

.....continued

Address	Name	Bit Pos.	7	6	5	4	3	2	1	0
0x02BC	U2P3	7:0	P3[7:0]							
		15:8								
0x02BE	U2CON0	7:0	BRGS	ABDEN	TXEN	RXEN	MODE[3:0]			
0x02BF	U2CON1	7:0	ON			WUE	RXBIMD		BRKOVR	SENDB
0x02C0	U2CON2	7:0	RUNOVF	RXPOL	STP[1:0]			TXPOL	FLO[1:0]	
0x02C1	U2BRG	7:0	BRG[7:0]							
		15:8	BRG[15:8]							
0x02C3	U2FIFO	7:0	TXWRE	STPMD	TXBE	TXBF	RXIDL	XON	RXBE	RXBF
0x02C4	U2UIR	7:0	WUIF	ABDIF				ABDIE		
0x02C5	U2ERRIR	7:0	TXMTIF	PERIF	ABDOVF	CERIF	FERIF	RXBKIF	RXFOIF	
0x02C6	U2ERRIE	7:0	TXMTIE	PERIE	ABDOVE	CERIE	FERIE	RXBKIE	RXFOIE	
0x02C7	U3RXB	7:0	RXB[7:0]							
0x02C8	Reserved									
0x02C9	U3TXB	7:0	TXB[7:0]							
0x02CA	Reserved									
0x02CB	U3P1	7:0	P1[7:0]							
		15:8								
0x02CD	U3P2	7:0	P2[7:0]							
		15:8								
0x02CF	U3P3	7:0	P3[7:0]							
		15:8								
0x02D1	U3CON0	7:0	BRGS	ABDEN	TXEN	RXEN	MODE[3:0]			
0x02D2	U3CON1	7:0	ON			WUE	RXBIMD		BRKOVR	SENDB
0x02D3	U3CON2	7:0	RUNOVF	RXPOL	STP[1:0]			TXPOL	FLO[1:0]	
0x02D4	U3BRG	7:0	BRG[7:0]							
		15:8	BRG[15:8]							
0x02D6	U3FIFO	7:0	TXWRE	STPMD	TXBE	TXBF	RXIDL	XON	RXBE	RXBF
0x02D7	U3UIR	7:0	WUIF	ABDIF				ABDIE		
0x02D8	U3ERRIR	7:0	TXMTIF	PERIF	ABDOVF	CERIF	FERIF	RXBKIF	RXFOIF	
0x02D9	U3ERRIE	7:0	TXMTIE	PERIE	ABDOVE	CERIE	FERIE	RXBKIE	RXFOIE	
0x02DA ... 0x02FF	Reserved									
0x0300	SMT1TMR	7:0	TMR[7:0]							
		15:8	TMR[15:8]							
		23:16	TMR[23:16]							
0x0303	SMT1CPR	7:0	CPR[7:0]							
		15:8	CPR[15:8]							
		23:16	CPR[23:16]							
0x0306	SMT1CPW	7:0	CPW[7:0]							
		15:8	CPW[15:8]							
		23:16	CPW[23:16]							
0x0309	SMT1PR	7:0	PR[7:0]							
		15:8	PR[15:8]							
		23:16	PR[23:16]							
0x030C	SMT1CON0	7:0	EN		STP	WPOL	SPOL	CPOL	PS[1:0]	
0x030D	SMT1CON1	7:0	GO	REPEAT			MODE[3:0]			
0x030E	SMT1STAT	7:0	CPRUP	CPWUP		RST		TS	WS	AS
0x030F	SMT1CLK	7:0					CSEL[3:0]			
0x0310	SMT1SIG	7:0				SSEL[4:0]				
0x0311	SMT1WIN	7:0				WSEL[4:0]				
0x0312	TMR1	7:0	TMR1[7:0]							
		15:8	TMR1[15:8]							
0x0314	T1CON	7:0			CKPS[1:0]			SYNC	RD16	ON
0x0315	T1GCON	7:0	GE	GPOL	GTM	GSPM	GGO/DONE	GVAL		
0x0316	T1GATE	7:0				GSS[4:0]				
0x0317	T1CLK	7:0				CS[4:0]				
0x0318	TMR0L	7:0	TMR0L[7:0]							
0x0319	TMR0H	7:0	TMR0H[7:0]							

.....continued

Address	Name	Bit Pos.	7	6	5	4	3	2	1	0
0x031A	T0CON0	7:0	EN		OUT	MD16	OUTPS[3:0]			
0x031B	T0CON1	7:0	CS[2:0]			ASYNC	CKPS[3:0]			
0x031C	T2TMR	7:0	T2TMR[7:0]							
0x031D	T2PR	7:0	T2PR[7:0]							
0x031E	T2CON	7:0	ON	CKPS[2:0]			OUTPS[3:0]			
0x031F	T2HLT	7:0	PSYNC	CPOL	CSYNC	MODE[4:0]				
0x0320	T2CLKCON	7:0					CS[3:0]			
0x0321	T2RST	7:0				RSEL[4:0]				
0x0322	Reserved									
0x0323	TMR3	7:0	TMR3[7:0]							
		15:8	TMR3[15:8]							
0x0325	T3CON	7:0			CKPS[1:0]			SYNC	RD16	ON
0x0326	T3GCON	7:0	GE	GPOL	GTM	GSPM	GGO/DONE	GVAL		
0x0327	T3GATE	7:0				GSS[4:0]				
0x0328	T3CLK	7:0				CS[4.0]				
0x0329	T4TMR	7:0	T4TMR[7:0]							
0x032A	T4PR	7:0	T4PR[7:0]							
0x032B	T4CON	7:0	ON	CKPS[2:0]			OUTPS[3:0]			
0x032C	T4HLT	7:0	PSYNC	CPOL	CSYNC	MODE[4:0]				
0x032D	T4CLKCON	7:0					CS[3:0]			
0x032E	T4RST	7:0				RSEL[4:0]				
0x032F ... 0x033F	Reserved									
0x0340	CCPRx	7:0	CCPR[7:0]							
		15:8	CCPR[15:8]							
0x0342	CCP1CON	7:0	EN		OUT	FMT	MODE[3:0]			
0x0343	CCPxCAP	7:0						CTS[2:0]		
0x0344 ... 0x034B	Reserved									
0x034C	CCPTMRS0	7:0			C3TSEL[1:0]		C2TSEL[1:0]		C1TSEL[1:0]	
0x034D	Reserved									
0x034E	CRCDATA	7:0	CRCDATAL[7:0]							
		15:8	CRCDATAH[7:0]							
		23:16	CRCDATAU[7:0]							
		31:24	CRCDATAT[7:0]							
0x0352	CRCOUT	7:0	CRCOUTL[7:0]							
		15:8	CRCOUTH[7:0]							
		23:16	CRCOUTU[7:0]							
		31:24	CRCOUTT[7:0]							
0x0352	CRCSHIFT	7:0	CRCSHIFTL[7:0]							
		15:8	CRCSHIFTH[7:0]							
		23:16	CRCSHIFTU[7:0]							
		31:24	CRCSHIFTT[7:0]							
0x0352	CRCXOR	7:0	CRCXORL[7:0]							
		15:8	CRCXORH[7:0]							
		23:16	CRCXORU[7:0]							
		31:24	CRCXORT[7:0]							
0x0356	CRCCON0	7:0	EN	GO	BUSY	ACCM	SETUP[1:0]		SHIFTM	FULL
0x0357	CRCCON1	7:0				PLEN[4:0]				
0x0358	CRCCON2	7:0				DLEN[4:0]				
0x0359 ... 0x035F	Reserved									
0x0360	SCANCON0	7:0	EN	TRIGEN	SGO			MREG	BURSTMD	BUSY
0x0361	SCANTRIG	7:0					TSEL[3:0]			

.....continued

Address	Name	Bit Pos.	7	6	5	4	3	2	1	0
0x0362 ... 0x0366	Reserved									
0x0367	IPR0	7:0	IOCIP	CRCIP	CLC1IP	NVMIP	CSWIP	OSFIP	HLVDIP	SWIP
0x0368	IPR1	7:0	SMT1PWAIP	SMT1PRAIP	SMT1IP	CM1IP	ACTIP	ADIP	ZCDIP	INT0IP
0x0369	IPR2	7:0	DMA1AIP	DMA1ORIP	DMA1DCNTIP	DMA1SCNTIP				ADTIP
0x036A	IPR3	7:0	TMR0IP	CCP1IP	TMR1GIP	TMR1IP	TMR2IP	SPI1IP	SPI1TXIP	SPI1RXIP
0x036B	IPR4	7:0	PWM1IP	PWM1PIP	TMR3GIP	TMR3IP	U1IP	U1EIP	U1TXIP	U1RXIP
0x036C	IPR5	7:0	PWM2IP	PWM2PIP	CLC2IP	CMIP		SPI2IP	SPI2TXIP	SPI2RXIP
0x036D	IPR6	7:0	DMA2AIP	DMA2ORIP	DMA2DCNTIP	DMA2SCNTIP	NCO1IP	CWG1IP		INT1IP
0x036E	IPR7	7:0	PWM3IP	PWM3PIP	CLC3IP		I2C1EIP	I2C1IP	I2C1TXIP	I2C1RXIP
0x036F	IPR8	7:0	SCANIP		CLC4IP		U2IP	U2EIP	U2TXIP	U2RXIP
0x0370	IPR9	7:0	DMA3AIP	DMA3ORIP	DMA3DCNTIP	DMA3SCNTIP	U3IP	U3EIP	U3TXIP	U3RXIP
0x0371	IPR10	7:0	DMA4AIP	DMA4ORIP	DMA4DCNTIP	DMA4SCNTIP	TMR4IP			INT2IP
0x0372	Reserved									
0x0373	STATUS_CSHAD	7:0		$\overline{TO}$	$\overline{PD}$	N	OV	Z	DC	C
0x0374	WREG_CSHAD	7:0	WREG[7:0]							
0x0375	BSR_CSHAD	7:0			BSR[5:0]					
0x0376	SHADCON	7:0								SHADLO
0x0377	STATUS_SHAD	7:0		$\overline{TO}$	$\overline{PD}$	N	OV	Z	DC	C
0x0378	WREG_SHAD	7:0	WREG[7:0]							
0x0379	BSR_SHAD	7:0			BSR[5:0]					
0x037A	PCLAT_SHAD	7:0	PCLATH[7:0]							
		15:8				PCLATU[4:0]				
0x037C	FSR0_SHAD	7:0	FSRL[7:0]							
		15:8			FSRH[5:0]					
0x037E	FSR1_SHAD	7:0	FSRL[7:0]							
		15:8			FSRH[5:0]					
0x0380	FSR2_SHAD	7:0	FSRL[7:0]							
		15:8			FSRH[5:0]					
0x0382	PROD_SHAD	7:0	PROD[7:0]							
		15:8	PROD[15:8]							
0x0384 ... 0x03BB	Reserved									
0x03BC	CWG1CLK	7:0								CS
0x03BD	CWG1ISM	7:0					ISM[3:0]			
0x03BE	CWG1DBR	7:0			DBR[5:0]					
0x03BF	CWG1DBF	7:0			DBF[5:0]					
0x03C0	CWG1CON0	7:0	EN	LD				MODE[2:0]		
0x03C1	CWG1CON1	7:0			IN		POLD	POLC	POLB	POLA
0x03C2	CWG1AS0	7:0	SHUTDOWN	REN	LSBD[1:0]		LSAC[1:0]			
0x03C3	CWG1AS1	7:0	AS7E	AS6E	AS5E	AS4E	AS3E	AS2E	AS1E	AS0E
0x03C4	CWG1STR	7:0	OVRD	OVRC	OVRB	OVRA	STRD	STRC	STRB	STRA
0x03C5 ... 0x03D6	Reserved									
0x03D7	FVRCON	7:0	EN	RDY	TSEN	TSRNG	CDAFVR[1:0]		ADFVR[1:0]	
0x03D8	ADCP	7:0	CPON							CPRDY
0x03D9	ADLTH	7:0	LTH[7:0]							
		15:8	LTH[15:8]							
0x03DB	ADUTH	7:0	UTH[7:0]							
		15:8	UTH[15:8]							
0x03DD	ADERR	7:0	ERR[7:0]							
		15:8	ERR[15:8]							
0x03DF	ADSTPT	7:0	STPT[7:0]							
		15:8	STPT[15:8]							
0x03E1	ADFLTR	7:0	FLTR[7:0]							
		15:8	FLTR[15:8]							

.....continued

Address	Name	Bit Pos.	7	6	5	4	3	2	1	0
0x03E3	ADACC	7:0	ACC[7:0]							
		15:8	ACC[15:8]							
		23:16							ACC[17:16]	
0x03E6	ADCNT	7:0	CNT[7:0]							
0x03E7	ADRPT	7:0	RPT[7:0]							
0x03E8	ADPREV	7:0	PREV[7:0]							
		15:8	PREV[15:8]							
0x03EA	ADRES	7:0	RES[7:0]							
		15:8	RES[15:8]							
0x03EC	ADPCH	7:0			PCH[5:0]					
0x03ED	Reserved									
0x03EE	ADACQ	7:0	ACQ[7:0]							
		15:8				ACQ[12:8]				
0x03F0	ADCAP	7:0				CAP[4:0]				
0x03F1	ADPRE	7:0	PRE[7:0]							
		15:8				PRE[12:8]				
0x03F3	ADCON0	7:0	ON	CONT		CS		FM		GO
0x03F4	ADCON1	7:0	PPOL	IPEN	GPOL					DSEN
0x03F5	ADCON2	7:0	PSIS		CRS[2:0]		ACLR		MD[2:0]	
0x03F6	ADCON3	7:0			CALC[2:0]		SOI		TMD[2:0]	
0x03F7	ADSTAT	7:0	AOV	UTHR	LTHR	MATH			STAT[2:0]	
0x03F8	ADREF	7:0				NREF			PREF[1:0]	
0x03F9	ADACT	7:0				ACT[4:0]				
0x03FA	ADCLK	7:0			CS[5:0]					
0x03FB ... 0x03FF	Reserved									
0x0400	ANSELA	7:0			ANSELA5	ANSELA4		ANSELA2	ANSELA1	ANSELA0
0x0401	WPUA	7:0			WPUA5	WPUA4	WPUA3	WPUA2	WPUA1	WPUA0
0x0402	ODCONA	7:0			ODCA5	ODCA4		ODCA2	ODCA1	ODCA0
0x0403	SLRCONA	7:0			SLRA5	SLRA4		SLRA2	SLRA1	SLRA0
0x0404	INLVLA	7:0			INLVLA5	INLVLA4	INLVLA3	INLVLA2	INLVLA1	INLVLA0
0x0405	IOCAP	7:0			IOCAP5	IOCAP4	IOCAP3	IOCAP2	IOCAP1	IOCAP0
0x0406	IOCAN	7:0			IOCAN5	IOCAN4	IOCAN3	IOCAN2	IOCAN1	IOCAN0
0x0407	IOCAF	7:0			IOCAF5	IOCAF4	IOCAF3	IOCAF2	IOCAF1	IOCAF0
0x0408	ANSELB	7:0	ANSELB7	ANSELB6	ANSELB5	ANSELB4				
0x0409	WPUB	7:0	WPUB7	WPUB6	WPUB5	WPUB4				
0x040A	ODCONB	7:0	ODCB7	ODCB6	ODCB5	ODCB4				
0x040B	SLRCONB	7:0	SLRB7	SLRB6	SLRB5	SLRB4				
0x040C	INLVLB	7:0	INLVLB7	INLVLB6	INLVLB5	INLVLB4				
0x040D	IOCBP	7:0	IOCBP7	IOCBP6	IOCBP5	IOCBP4				
0x040E	IOCBN	7:0	IOCBN7	IOCBN6	IOCBN5	IOCBN4				
0x040F	IOCBF	7:0	IOCBF7	IOCBF6	IOCBF5	IOCBF4				
0x0410	ANSELC	7:0	ANSELC7	ANSELC6	ANSELC5	ANSELC4	ANSELC3	ANSELC2	ANSELC1	ANSELC0
0x0411	WPUC	7:0	WPUC7	WPUC6	WPUC5	WPUC4	WPUC3	WPUC2	WPUC1	WPUC0
0x0412	ODCONC	7:0	ODCC7	ODCC6	ODCC5	ODCC4	ODCC3	ODCC2	ODCC1	ODCC0
0x0413	SLRCONC	7:0	SLRC7	SLRC6	SLRC5	SLRC4	SLRC3	SLRC2	SLRC1	SLRC0
0x0414	INLVLC	7:0	INLVLC7	INLVLC6	INLVLC5	INLVLC4	INLVLC3	INLVLC2	INLVLC1	INLVLC0
0x0415	IOCCP	7:0	IOCCP7	IOCCP6	IOCCP5	IOCCP4	IOCCP3	IOCCP2	IOCCP1	IOCCP0
0x0416	IOCCN	7:0	IOCCN7	IOCCN6	IOCCN5	IOCCN4	IOCCN3	IOCCN2	IOCCN1	IOCCN0
0x0417	IOCCF	7:0	IOCCF7	IOCCF6	IOCCF5	IOCCF4	IOCCF3	IOCCF2	IOCCF1	IOCCF0
0x0418 ... 0x043F	Reserved									
0x0440	NCO1ACC	7:0	ACC[7:0]							
		15:8	ACC[15:8]							
		23:16					ACC[19:16]			

.....continued

Address	Name	Bit Pos.	7	6	5	4	3	2	1	0
0x0443	NCO1INC	7:0	INC[7:0]							
		15:8	INC[15:8]							
		23:16					INC[19:16]			
0x0446	NCO1CON	7:0	EN		OUT	POL				PFM
0x0447	NCO1CLK	7:0	PWS[2:0]				CKS[3:0]			
0x0448 0x0457	Reserved									
0x0458	FSCMCON	7:0			FSCMSFI	FSCMSEV	FSCMPFI	FSCMPEV	FSCMFFI	FSCMFEV
0x0459	IVTLOCK	7:0								IVTLOCKED
0x045A	IVTAD	7:0	IVTADL[7:0]							
		15:8	IVTADH[7:0]							
		23:16				IVTADU[4:0]				
0x045D	IVTBASE	7:0	IVTBASEL[7:0]							
		15:8	IVTBASEH[7:0]							
		23:16				IVTBASEU[4:0]				
0x0460	PWM1ERS	7:0					ERS[3:0]			
0x0461	PWM1CLK	7:0					CLK[3:0]			
0x0462	PWM1LDS	7:0					LDS[3:0]			
0x0463	PWM1PR	7:0	PR[7:0]							
		15:8	PR[15:8]							
0x0465	PWM1CPRE	7:0	CPRE[7:0]							
0x0466	PWM1PIPOS	7:0	PIPOS[7:0]							
0x0467	PWM1GIR	7:0							S1P2	S1P1
0x0468	PWM1GIE	7:0							S1P2	S1P1
0x0469	PWM1CON	7:0	EN					LD	ERSPOL	ERSNOW
0x046A	PWM1S1CFG	7:0	POL2	POL1			PPEN	MODE[2:0]		
0x046B	PWM1S1P1	7:0	P1[7:0]							
		15:8	P1[15:8]							
0x046D	PWM1S1P2	7:0	P2[7:0]							
		15:8	P2[15:8]							
0x046F	PWM2ERS	7:0					ERS[3:0]			
0x0470	PWM2CLK	7:0					CLK[3:0]			
0x0471	PWM2LDS	7:0					LDS[3:0]			
0x0472	PWM2PR	7:0	PR[7:0]							
		15:8	PR[15:8]							
0x0474	PWM2CPRE	7:0	CPRE[7:0]							
0x0475	PWM2PIPOS	7:0	PIPOS[7:0]							
0x0476	PWM2GIR	7:0							S1P2	S1P1
0x0477	PWM2GIE	7:0							S1P2	S1P1
0x0478	PWM2CON	7:0	EN					LD	ERSPOL	ERSNOW
0x0479	PWM2S1CFG	7:0	POL2	POL1			PPEN	MODE[2:0]		
0x047A	PWM2S1P1	7:0	P1[7:0]							
		15:8	P1[15:8]							
0x047C	PWM2S1P2	7:0	P2[7:0]							
		15:8	P2[15:8]							
0x047E	PWM3ERS	7:0					ERS[3:0]			
0x047F	PWM3CLK	7:0					CLK[3:0]			
0x0480	PWM3LDS	7:0					LDS[3:0]			
0x0481	PWM3PR	7:0	PR[7:0]							
		15:8	PR[15:8]							
0x0483	PWM3CPRE	7:0	CPRE[7:0]							
0x0484	PWM3PIPOS	7:0	PIPOS[7:0]							
0x0485	PWM3GIR	7:0							S1P2	S1P1
0x0486	PWM3GIE	7:0							S1P2	S1P1
0x0487	PWM3CON	7:0	EN					LD	ERSPOL	ERSNOW
0x0488	PWM3S1CFG	7:0	POL2	POL1			PPEN	MODE[2:0]		
0x0489	PWM3S1P1	7:0	P1[7:0]							
		15:8	P1[15:8]							

.....continued

Address	Name	Bit Pos.	7	6	5	4	3	2	1	0
0x048B	PWM3S1P2	7:0	P2[7:0]							
		15:8	P2[15:8]							
0x048D ... 0x049B	Reserved									
0x049C	PWMLOAD	7:0						MPWM3LD	MPWM2LD	MPWM1LD
0x049D	PWMEN	7:0						MPWM3EN	MPWM2EN	MPWM1EN
0x049E ... 0x04A7	Reserved									
0x04A8	PIE0	7:0	IOCIE	CRCIE	CLC1IE	NVMIE	CSWIE	OSFIE	HLVDIE	SWIE
0x04A9	PIE1	7:0	SMT1PWAIE	SMT1PRAIE	SMT1IE	CM1IE	ACTIE	ADIE	ZCDIE	INT0IE
0x04AA	PIE2	7:0	DMA1AIE	DMA1ORIE	DMA1DCNTIE	DMA1SCNTIE				ADTIE
0x04AB	PIE3	7:0	TMR0IE	CCP1IE	TMR1GIE	TMR1IE	TMR2IE	SPI1IE	SPI1TXIE	SPI1RXIE
0x04AC	PIE4	7:0	PWM1IE	PWM1PIE	TMR3GIE	TMR3IE	U1IE	U1EIE	U1TXIE	U1RXIE
0x04AD	PIE5	7:0	PWM2IE	PWM2PIE	CLC2IE	CM2IE		SPI2IE	SPI2TXIE	SPI2RXIE
0x04AE	PIE6	7:0	DMA2AIE	DMA2ORIE	DMA2DCNTIE	DMA2SCNTIE	NCO1IE	CWG1IE		INT1IE
0x04AF	PIE7	7:0	PWM3IE	PWM3PIE	CLC3IE		I2C1EIE	I2C1IE	I2C1TXIE	I2C1RXIE
0x04B0	PIE8	7:0	SCANIE		CLC4IE		U2IE	U2EIE	U2TXIE	U2RXIE
0x04B1	PIE9	7:0	DMA3AIE	DMA3ORIE	DMA3DCNTIE	DMA3SCNTIE	U3IE	U3EIE	U3TXIE	U3RXIE
0x04B2	PIE10	7:0	DMA4AIE	DMA4ORIE	DMA4DCNTIE	DMA4SCNTIE	TMR4IE			INT2IE
0x04B3	PIR0	7:0	IOCIF	CRCIF	CLC1IF	NVMIF	CSWIF	OSFIF	HLVDIF	SWIF
0x04B4	PIR1	7:0	SMT1PWAIF	SMT1PRAIF	SMT1IF	CM1IF	ACTIF	ADIF	ZCDIF	INT0IF
0x04B5	PIR2	7:0	DMA1AIF	DMA1ORIF	DMA1DCNTIF	DMA1SCNTIF				ADTIF
0x04B6	PIR3	7:0	TMR0IF	CCP1IF	TMR1GIF	TMR1IF	TMR2IF	SPI1IF	SPI1TXIF	SPI1RXIF
0x04B7	PIR4	7:0	PWM1IF	PWM1PIF	TMR3GIF	TMR3IF	U1IF	U1EIF	U1TXIF	U1RXIF
0x04B8	PIR5	7:0	PWM2IF	PWM2PIF	CLC2IF	CM2IF		SPI2IF	SPI2TXIF	SPI2RXIF
0x04B9	PIR6	7:0	DMA2AIF	DMA2ORIF	DMA2DCNTIF	DMA2SCNTIF	NCO1IF	CWG1IF		INT1IF
0x04BA	PIR7	7:0	PWM3IF	PWM3PIF	CLC3IF		I2C1EIF	I2C1IF	I2C1TXIF	I2C1RXIF
0x04BB	PIR8	7.0	SCANIF		CLC4IF		U2IF	U2EIF	U2TXIF	U2RXIF
0x04BC	PIR9	7:0	DMA3AIF	DMA3ORIF	DMA3DCNTIF	DMA3SCNTIF	U3IF	U3EIF	U3TXIF	U3RXIF
0x04BD	PIR10	7:0	DMA4AIF	DMA4ORIF	DMA4DCNTIF	DMA4SCNTIF	TMR4IF			INT2IF
0x04BE	LATA	7:0			LATA5	LATA4		LATA2	LATA1	LATA0
0x04BF	LATB	7:0	LATB7	LATB6	LATB5	LATB4				
0x04C0	LATC	7:0	LATC7	LATC6	LATC5	LATC4	LATC3	LATC2	LATC1	LATC0
0x04C1 ... 0x04C5	Reserved									
0x04C6	TRISA	7:0			TRISA5	TRISA4	Reserved	TRISA2	TRISA1	TRISA0
0x04C7	TRISB	7:0	TRISB7	TRISB6	TRISB5	TRISB4				
0x04C8	TRISC	7:0	TRISC7	TRISC6	TRISC5	TRISC4	TRISC3	TRISC2	TRISC1	TRISC0
0x04C9 ... 0x04CD	Reserved									
0x04CE	PORTA	7:0			RA5	RA4	RA3	RA2	RA1	RA0
0x04CF	PORTB	7:0	RB7	RB6	RB5	RB4				
0x04D0	PORTC	7:0	RC7	RC6	RC5	RC4	RC3	RC2	RC1	RC0
0x04D1 ... 0x04D5	Reserved									
0x04D6	INTCON0	7:0	GIE/GIEH	GIEL	IPEN			INT2EDG	INT1EDG	INT0EDG
0x04D7	INTCON1	7:0	STAT[1:0]							
0x04D8	STATUS	7:0		$\overline{TO}$	$\overline{PD}$	N	OV	Z	DC	C
0x04D9	FSR2	7:0	FSRL[7:0]							
		15:8			FSRH[5:0]					
0x04DB	PLUSW2	7:0	PLUSW[7:0]							
0x04DC	PREINC2	7:0	PREINC[7:0]							
0x04DD	POSTDEC2	7:0	POSTDEC[7:0]							
0x04DE	POSTINC2	7:0	POSTINC[7:0]							

.....continued

Address	Name	Bit Pos.	7	6	5	4	3	2	1	0
0x04DF	INDF2	7:0	INDF[7:0]							
0x04E0	BSR	7:0			BSR[5:0]					
0x04E1	FSR1	7:0	FSRL[7:0]							
		15:8			FSRH[5:0]					
0x04E3	PLUSW1	7:0	PLUSW[7:0]							
0x04E4	PREINC1	7:0	PREINC[7:0]							
0x04E5	POSTDEC1	7:0	POSTDEC[7:0]							
0x04E6	POSTINC1	7:0	POSTINC[7:0]							
0x04E7	INDF1	7:0	INDF[7:0]							
0x04E8	WREG	7:0	WREG[7:0]							
0x04E9	FSR0	7:0	FSRL[7:0]							
		15:8			FSRH[5:0]					
0x04EB	PLUSW0	7:0	PLUSW[7:0]							
0x04EC	PREINC0	7:0	PREINC[7:0]							
0x04ED	POSTDEC0	7:0	POSTDEC[7:0]							
0x04EE	POSTINC0	7:0	POSTINC[7:0]							
0x04EF	INDF0	7:0	INDF[7:0]							
0x04F0	PCON0	7:0	STKOVF	STKUNF	WDTWV	RWDT	RMCLR	RI	POR	BOR
0x04F1	PCON1	7:0						RVREG	MEMV	RCM
0x04F2	CPUDOZE	7:0	IDLEN	DOZEN	ROI	DOE		DOZE[2:0]		
0x04F3	PROD	7:0	PROD[7:0]							
		15:8	PROD[15:8]							
0x04F5	TABLAT	7:0	TABLAT[7:0]							
0x04F6	TBLPTR	7:0	TBLPTR[7:0]							
		15:8	TBLPTR[15:8]							
		23:16			TBLPTR21	TBLPTR[20:16]				
0x04F9	PCL	7:0	PCL[7:0]							
0x04FA	PCLAT	7:0	PCLATH[7:0]							
		15:8				PCLATU[4:0]				
0x04FC	STKPTR	7:0		STKPTR[6:0]						
0x04FD	TOS	7:0	TOS[7:0]							
		15:8	TOS[15:8]							
		23:16				TOS[20:16]				
0x0500 ... 0x2FFFFF	Reserved									
0x300000	CONFIG1	7:0		RSTOSC[2:0]				FEXTOSC[2:0]		
0x300001	CONFIG2	7:0	FCMENS	FCMENP	FCMEN		CSWEN		PR1WAY	CLKOUTEN
0x300002	CONFIG3	7:0	BOREN[1:0]		LPBOREN	IVT1WAY	MVECEN	PWRTS[1:0]		MCLRE
0x300003	CONFIG4	7:0	XINST		LVP	STVREN	PPS1WAY	ZCD	BORV[1:0]	
0x300004	CONFIG5	7:0		WDTE[1:0]		WDTCPS[4:0]				
0x300005	CONFIG6	7:0			WDTCCS[2:0]			WDTCWS[2:0]		
0x300006	CONFIG7	7:0			DEBUG	SAFEN	BBEN	BBSIZE[2:0]		
0x300007	CONFIG8	7:0	WRTAPP				WRTSAF	WRTD	WRTC	WRTB
0x300008	CONFIG9	7:0								CP
0x300009 ... 0x3FFFFB	Reserved									
0x3FFFFC	REVISIONID	7:0	MJRREV[1:0]		MNRREV[5:0]					
		15:8	1010[3:0]				MJRREV[5:2]			
0x3FFFFE	DEVICEID	7:0	DEV[7:0]							
		15:8	DEV[15:8]							

47. Electrical Specifications

47.1 Absolute Maximum Ratings(†)

Parameter		Rating
Ambient temperature under bias		-40°C to +125°C
Storage temperature		-65°C to +150°C
Voltage on pins with respect to V_{SS}		
• **on V_{DD} pin:**		-0.3V to +6.5V
• **on $\overline{MCLR}$ pin:**		-0.3V to +9.0V
• **on all other pins:**		-0.3V to (V_{DD} + 0.3V)
Maximum current(1)		
• **on V_{SS} pin**	-40°C ≤ T_A ≤ +85°C	350 mA
	85°C < T_A ≤ +125°C	120 mA
• **on V_{DD} pin (28-pin devices)**	-40°C ≤ T_A ≤ +85°C	250 mA
	85°C < T_A ≤ +125°C	85 mA
• **on V_{DD} pin (40-pin devices)**	-40°C ≤ T_A ≤ +85°C	350 mA
	85°C < T_A ≤ +125°C	120 mA
• **on any standard I/O pin**		±50 mA
Clamp current, I_K (V_{PIN} < 0 or V_{PIN} > V_{DD})		±20 mA
Total power dissipation(2)		800 mW

Notes:

1. Maximum current rating requires even load distribution across I/O pins. Maximum current rating may be limited by the device package power dissipation characterizations, see Thermal Characteristics section to calculate device specifications.
2. Power dissipation is calculated as follows:
   $P_{DIS} = V_{DD} \times \{I_{DD} - \Sigma I_{OH}\} + \Sigma \{(V_{DD} - V_{OH}) \times I_{OH}\} + \Sigma (V_{OI} \times I_{OL})$

† NOTICE: Stresses above those listed under **"Absolute Maximum Ratings"** may cause permanent damage to the device. This is a stress rating only and functional operation of the device at those or any other conditions above those indicated in the operation listings of this specification is not implied. Exposure above maximum rating conditions for extended periods may affect device reliability.

47.2 Standard Operating Conditions

The standard operating conditions for any device are defined as:

Operating Voltage: $V_{DDMIN} \le V_{DD} \le V_{DDMAX}$

Operating Temperature: $T_{A_MIN} \le T_A \le T_{A_MAX}$

Parameter		Ratings
V_{DD} — Operating Supply Voltage(1)	V_{DDMIN}	+1.8V
	V_{DDMAX}	+5.5V
T_A — Operating Ambient Temperature Range		
Industrial Temperature	T_{A_MIN}	-40°C
	T_{A_MAX}	+85°C
Extended Temperature	T_{A_MIN}	-40°C
	T_{A_MAX}	+125°C

Note:

1. See Parameter Supply Voltage in the **"DC Characteristics"** chapter for more details.

Figure 47-1. Voltage Frequency Graph, -40°C ≤ T_A ≤ +125°C

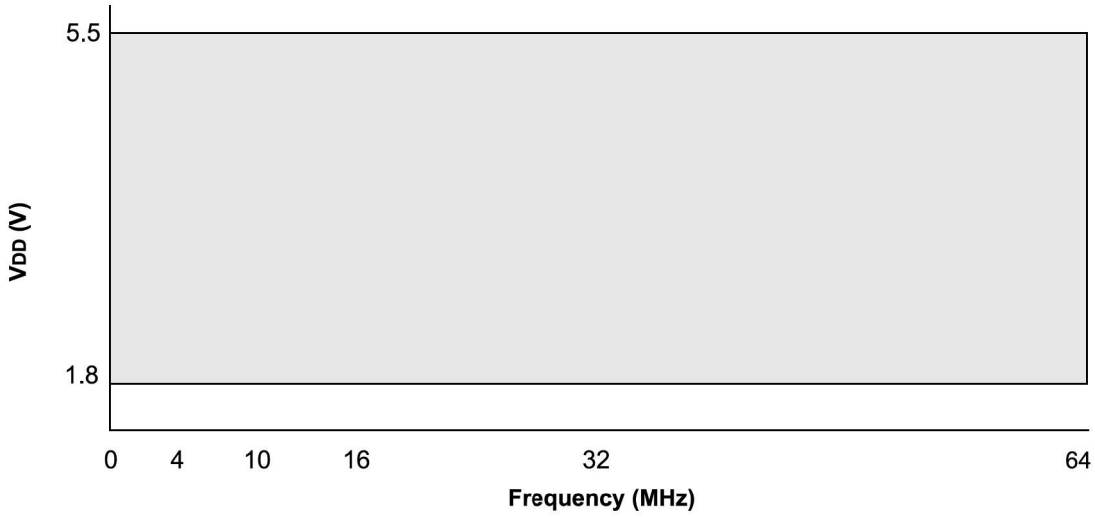

Notes:

- The shaded region indicates the permissible combinations of voltage and frequency.
- Refer to **"External Clock/Oscillator Timing Requirements"** table in the **"AC Characteristics"** chapter for each Oscillator mode's supported frequencies.

47.3 DC Characteristics

47.3.1 Supply Voltage

Table 47-1.

Standard Operating Conditions (unless otherwise stated)							
Param. No.	**Sym.**	**Characteristic**	**Min.**	**Typ.†**	**Max.**	**Units**	**Conditions**
Supply Voltage							
D002	V_{DD}		1.8	—	5.5	V	
RAM Data Retention(1)							
D003	V_{DR}		1.7	—	—	V	Device in Sleep mode
Power-on Reset Release Voltage(2)							
D004	V_{POR}		—	1.6	—	V	BOR and LPBOR disabled(3)
Power-on Reset Rearm Voltage(2)							
D005	V_{PORR}		—	1	—	V	BOR and LPBOR disabled(3)
V_{DD} Rise Rate to ensure internal Power-on Reset signal(2)							
D006	S_{VDD}		0.05	—	—	V/ms	BOR and LPBOR disabled(3)

† Data in "Typ." column is at 3.0V, 25°C unless otherwise stated. These parameters are for design guidance only and are not tested.

Notes:

1. This is the limit to which V_{DD} can be lowered in Sleep mode without losing RAM data.
2. See the following figure, POR and POR REARM with Slow Rising V_{DD}.
3. See Reset, WDT, Oscillator Start-up Timer, Brown-Out Reset and Low-Power Brown-Out Reset Specifications for BOR and LPBOR trip point information.

Figure 47-2. POR and POR Rearm with Slow Rising V_{DD}

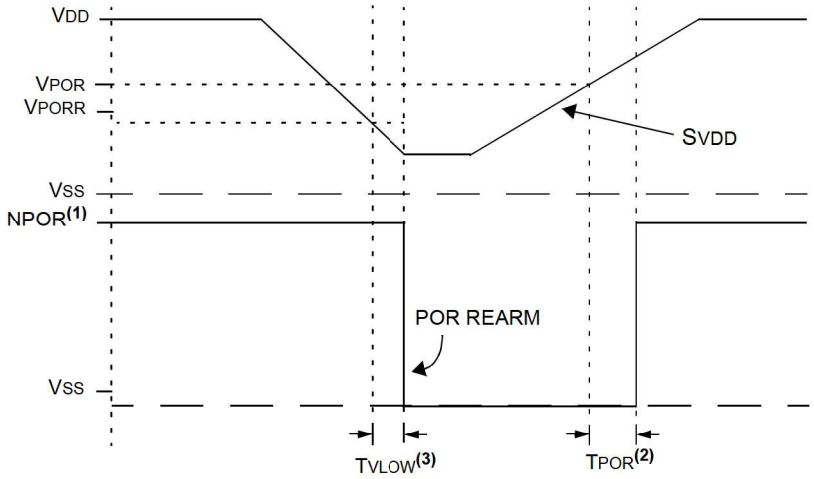

Notes:

1. When NPOR is low, the device is held in Reset.
2. T_{POR} 1 µs typical.
3. T_{VLOW} 2.7 µs typical.

47.3.2 Supply Current (I_{DD})(1,2,4)

Table 47-2.

Standard Operating Conditions (unless otherwise stated)								
Param. No.	Sym.	Device Characteristics	Min.	Typ.†	Max.	Units	Conditions	
							V_{DD}	Note
D100	$I_{DD_{XT4}}$	XT = 4 MHz	—	640	870	µA	3.0V	
D100A	$I_{DD_{XT4}}$	XT = 4 MHz	—	490	700	µA	3.0V	PMD's all 1's
D101	$I_{DD_{HFO16}}$	HFINTOSC = 16 MHz	—	2	2.5	mA	3.0V	
D101A	$I_{DD_{HFO16}}$	HFINTOSC = 16 MHz	—	1.5	1.9	mA	3.0V	PMD's all 1's
D102	$I_{DD_{HFOPLL}}$	HFINTOSC = 64 MHz	—	6.7	8.2	mA	3.0V	
D102A	$I_{DD_{HFOPLL}}$	HFINTOSC = 64 MHz	—	4.5	5.4	mA	3.0V	PMD's all 1's
D103	$I_{DD_{HSPLL64}}$	HS+PLL = 64 MHz	—	5.6	13.8	mA	3.0V	
D103A	$I_{DD_{HSPLL64}}$	HS+PLL = 64 MHz	—	3.8	11.5	mA	3.0V	PMD's all 1's
D104	$I_{DD_{IDLE}}$	Idle mode, HFINTOSC = 16 MHz	—	1.4	1.8	mA	3.0V	
D105	$I_{DD_{DOZE}}$(3)	Doze mode, HFINTOSC = 16 MHz, Doze Ratio = 16	—	1.5	1.9	mA	3.0V	

.....continued

Standard Operating Conditions (unless otherwise stated)								
Param. No.	Sym.	Device Characteristics	Min.	Typ.†	Max.	Units	Conditions	
							V_{DD}	Note

† Data in "Typ." column is at 3.0V, 25°C unless otherwise stated. These parameters are for design guidance only and are not tested.

Notes:

1. The test conditions for all I_{DD} measurements in Active Operation mode are: OSC1 = external square wave, from rail-to-rail; all I/O pins are outputs driven low; $\overline{MCLR}$ = V_{DD}; WDT disabled.
2. The supply current is mainly a function of the operating voltage and frequency. Other factors, such as I/O pin loading and switching rate, oscillator type, internal code execution pattern and temperature, also have an impact on the current consumption.
3. $I_{DD_{DOZE}}$ = [$I_{DD_{IDLE}}$*(N-1)/N] + $I_{DD_{HFO}}$16/N where N = Doze Ratio (see **CPUDOZE** register).
4. PMD bits are all in the Default state, no modules are disabled.

47.3.3 Power-Down Current (I_{PD})(1,2)

Table 47-3.

Standard Operating Conditions (unless otherwise stated)										
Param. No.	Sym.	Device Characteristics	Min.	Typ.†	Max. +85°C	Max. +125°C	Units	Conditions		
								V_{DD}	VREGPM	Note
D200	I_{PD}	I_{PD} Base	—	1.1	3.3	4.6	µA	3.0V	'b11	
			—	0.9	12.1	33.3	µA	3.0V	'b10	
			—	29.5	45.5	68.9	µA	3.0V	'b01	
			—	152	190	198.5	µA	3.0V	'b00	
D201	I_{PD_WDT}	Low-Frequency Internal Oscillator/WDT	—	1.5	3.8	5.1	µA	3.0V	'b11	
D202	I_{PD_SOSC}	Secondary Oscillator (S_{OSC})	—	2.1	4.6	7.9	µA	3.0V	'b11	
D203	I_{PD_LPBOR}	Low-Power Brown-out Reset (LPBOR)	—	1.3	3.5	4.8	µA	3.0V	'b11	
D204	$I_{PD_FVR_BUF1}$	FVR Buffer 1 (ADC)	—	174.7	249.7	255.4	µA	3.0V	'b11	
D204A	$I_{PD_FVR_BUF2}$	FVR Buffer 2 (DAC/CMP)	—	49.4	74.2	90.7	µA	3.0V	'bx1 or 'b10	
D205	I_{PD_BOR}	Brown-out Reset (BOR)	—	16.6	20.4	20.8	µA	3.0V	'b11	
D206	I_{PD_HLVD}	High/Low Voltage Detect (HLVD)	—	16.9	20.8	22.5	µA	3.0V	'b11	
D207	I_{PD_ADCA}	ADC - Active	—	483	789	790	µA	3.0V	'bx1 or 'b10	ADC is converting **(Note 4)**

.....continued

Standard Operating Conditions (unless otherwise stated)										
Param. No.	Sym.	Device Characteristics	Min.	Typ.†	Max. +85°C	Max. +125°C	Units	Conditions		
								V_{DD}	VREGPM	Note
D208	I_{PD_CMP}	Comparator	—	52.5	84.2	105	µA	3.0V	'b11	

* These parameters are characterized but not tested.

† Data in "Typ." column is at 3.0V, 25°C unless otherwise stated. These parameters are for design guidance only and are not tested.

Notes:

1. The peripheral current is the sum of the base I_{DD} and the additional current consumed when this peripheral is enabled. The peripheral Δ current can be determined by subtracting the base I_{DD} or I_{PD}current from this limit. Max. values should be used when calculating total current consumption.
2. The power-down current in Sleep mode does not depend on the oscillator type. Power-down current is measured with the part in Sleep mode with all I/O pins in high-impedance state and tied to V_{SS}.
3. All peripheral currents listed are on a per-peripheral basis if more than one instance of a peripheral is available.
4. ADC clock source is ADCRC.

47.3.4 I/O Ports

Table 47-4.

Standard Operating Conditions (unless otherwise stated)							
Param. No.	Sym.	Device Characteristics	Min.	Typ.†	Max.	Units	Conditions
Input Low Voltage							
	V_{IL}	I/O PORT:					
D300		• with TTL buffer	—	—	0.8	V	$4.5V \le V_{DD} \le 5.5V$
D301			—	—	$0.15\ V_{DD}$	V	$1.8V \le V_{DD} < 4.5V$
D302		• with Schmitt Trigger buffer	—	—	$0.2\ V_{DD}$	V	$2.0V \le V_{DD} \le 5.5V$
D303		• with I^2C levels	—	—	$0.3\ V_{DD}$	V	$2.0V \le V_{DD} \le 5.5V$
D304		• with SMBus 2.0	—	—	0.8	V	$2.7V \le V_{DD} \le 5.5V$
D305		• with SMBus 3.0	—	—	0.8	V	
D306		$\overline{MCLR}$	—	—	$0.2\ V_{DD}$	V	
High Low Voltage							
	V_{IH}	I/O PORT:					
D320		• with TTL buffer	2.0	—	—	V	$4.5V \le V_{DD} \le 5.5V$
D321			$0.25\ V_{DD} + 0.8$	—	—	V	$1.8V \le V_{DD} < 4.5V$
D322		• with Schmitt Trigger buffer	$0.8\ V_{DD}$	—	—	V	$2.0V \le V_{DD} \le 5.5V$
D323		• with I^2C levels	$0.7\ V_{DD}$	—	—	V	
D324		• with SMBus 2.0	2.1	—	—	V	$2.7V \le V_{DD} \le 5.5V$
D325		• with SMBus 3.0	1.35	—	—	V	
D326		$\overline{MCLR}$	$0.7\ V_{DD}$	—	—	V	

.....continued							
Standard Operating Conditions (unless otherwise stated)							
Param. No.	**Sym.**	**Device Characteristics**	**Min.**	**Typ.†**	**Max.**	**Units**	**Conditions**
Input Leakage Current(1)							
D340	I_{IL}	I/O PORTS	—	±5	±125	nA	$V_{SS} \le V_{PIN} \le V_{DD}$, Pin at high-impedance, 85°C
D341			—	±5	±1000	nA	$V_{SS} \le V_{PIN} \le V_{DD}$, Pin at high-impedance, 125°C
D342		$\overline{MCLR}$(2)	—	±50	±200	nA	$V_{SS} \le V_{PIN} \le V_{DD}$, Pin at high-impedance, 85°C
Weak Pull-up Current							
D350	I_{PUR}		80	140	200	µA	V_{DD} = 3.0V, $V_{PIN} = V_{SS}$
Output Low Voltage							
D360	V_{OL}	I/O PORTS	—	—	0.6	V	I_{OL} = 10.0 mA, V_{PIN} = 3.0V
Output High Voltage							
D370	V_{OH}	I/O PORTS	V_{DD} - 0.7	—	—	V	I_{OH} = 6.0 mA, V_{PIN} = 3.0V
All I/O Pins							
D380	C_{IO}		—	5	50	pF	

† Data in "Typ" column is at 3.0V, 25°C unless otherwise stated. These parameters are for design guidance only and are not tested.

Notes:

1. Negative current is defined as current sourced by the pin.
2. The leakage current on the $\overline{MCLR}$ pin is strongly dependent on the applied voltage level. The specified levels represent normal operating conditions. Higher leakage current may be measured at different input voltages.

47.3.5 Memory Programming Specifications

Table 47-5.

Standard Operating Conditions (unless otherwise stated)							
Param No.	**Sym.**	**Device Characteristics**	**Min.**	**Typ†**	**Max.**	**Units**	**Conditions**
Data EEPROM Memory Specifications							
MEM20	E_D	DataEE Byte Endurance	100k	—	—	E/W	-40°C ≤ T_A ≤ +85°C
MEM21	T_{D_RET}	Characteristic Retention	—	40	—	Year	Provided no other specifications are violated
MEM23	V_{D_RW}	V_{DD} for Read or Erase/Write operation	V_{DDMIN}	—	V_{DDMAX}	V	
MEM24	T_{D_BEW}	Byte Erase and Write Cycle Time	—	—	11	ms	
Program Flash Memory Specifications							

.....continued

Standard Operating Conditions (unless otherwise stated)							
Param No.	Sym.	Device Characteristics	Min.	Typ†	Max.	Units	Conditions
MEM30	E_P	Flash Memory Cell Endurance	10k	—	—	E/W	-40°C ≤ T_A ≤ +85°C **(Note 1)**
MEM32	T_{P_RET}	Characteristic Retention	—	40	—	Year	Provided no other specifications are violated
MEM33	V_{P_RD}	V_{DD} for Read operation	V_{DDMIN}	—	V_{DDMAX}	V	
MEM34	V_{P_REW}	V_{DD} for Row Erase or Write operation	V_{DDMIN}	—	V_{DDMAX}	V	
MEM35	T_{P_REW}	Self-Timed Page Write	—	—	10	ms	
MEM36	T_{SE}	Self-Timed Page Erase	—	—	11	ms	
MEM37	T_{P_WRD}	Self-Timed Word Write	—	—	75	µs	

† Data in "Typ" column is at 3.0V, 25°C unless otherwise stated. These parameters are for design guidance only and are not tested.

Note:

1. Flash Memory Cell Endurance for the Flash memory is defined as: One Row Erase operation and one Self-Timed Write.

47.3.6 Thermal Characteristics

Table 47-6.

Standard Operating Conditions (unless otherwise stated)					
Param No.	Sym.	Characteristic	Typ.	Units	Conditions
TH01	θ_{JA}	Thermal Resistance Junction to Ambient	95.3	°C/W	14-pin SOIC package
			100	°C/W	14-pin TSSOP package
			62.2	°C/W	20-pin PDIP package
			77.7	°C/W	20-pin SOIC package
			87.3	°C/W	20-pin SSOP package
			79.7	°C/W	20-pin VQFN package
TH02	T_{JMAX}	Maximum Junction Temperature	150	°C	

Note:

1. See "Absolute Maximum Ratings" for total power dissipation.

47.4 AC Characteristics

Figure 47-3. Load Conditions

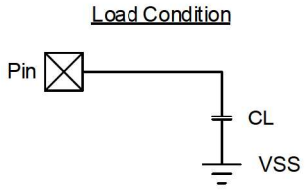

Legend: CL=50 pF for all pins

47.4.1 External Clock/Oscillator Timing Requirements

Figure 47-4. Clock Timing

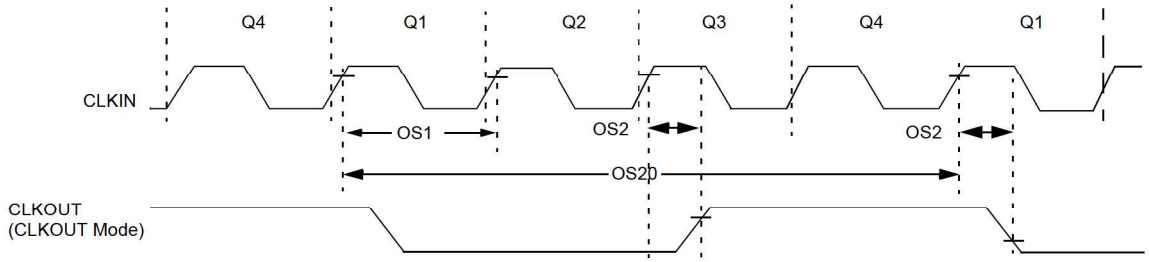

Note: See table below.

Table 47-7.

Standard Operating Conditions (unless otherwise stated)							
Param No.	**Sym.**	**Characteristic**	**Min.**	**Typ. †**	**Max.**	**Units**	**Conditions**
ECL Oscillator							
OS1	F_{ECL}	Clock Frequency	—	—	1	MHz	
OS2	T_{ECL_DC}	Clock Duty Cycle	40	—	60	%	
ECM Oscillator							
OS3	F_{ECM}	Clock Frequency	—	—	16	MHz	
OS4	T_{ECM_DC}	Clock Duty Cycle	40	—	60	%	
ECH Oscillator							
OS5	F_{ECH}	Clock Frequency	—	—	64	MHz	$V_{DD} \geq 2.7V$
			—	—	32	MHz	$V_{DD} < 2.7V$
OS6	T_{ECH_DC}	Clock Duty Cycle	40	—	60	%	
LP Oscillator							
OS7	F_{LP}	Clock Frequency	—	—	100	kHz	**(Note 4)**
XT Oscillator							
OS8	F_{XT}	Clock Frequency	—	—	4	MHz	**(Note 4)**
HS Oscillator							

.....continued							
Standard Operating Conditions (unless otherwise stated)							
Param No.	**Sym.**	**Characteristic**	**Min.**	**Typ. †**	**Max.**	**Units**	**Conditions**
OS9	F_{HS}	Clock Frequency	—	—	20	MHz	V_{DD} > 2.5V **(Note 4)**
Secondary Oscillator							
OS10	F_{SEC}	Clock Frequency	32.4	32.768	33.1	kHz	**(Note 4)**
System Oscillator							
OS20	F_{OSC}	System Clock Frequency	—	—	64	MHz	**(Note 2, Note 3)**
OS21	F_{CY}	Instruction Frequency	—	$F_{OSC}/4$	—	MHz	
OS22	T_{CY}	Instruction Period	62.5	$1/F_{CY}$	—	ns	

Notes:

1. Instruction cycle period (TCY) equals four times the input oscillator time base period. All specified values are based on characterization data for that particular oscillator type under standard operating conditions with the device executing code. Exceeding these specified limits may result in an unstable oscillator operation and/or higher than expected current consumption. All devices are tested to operate at “min” values with an external clock applied to OSC1 pin. When an external clock input is used, the “max” cycle time limit is “DC” (no clock) for all devices.
2. The system clock frequency (F_{OSC}) is selected by the “main clock switch controls” as described in the **“Power Saving Operation Modes”** section.
3. The system clock frequency (F_{OSC}) must meet the voltage requirements defined in the **“Standard Operating Conditions”** section.
4. LP, XT and HS oscillator modes require an appropriate crystal or resonator to be connected to the device. For clocking the device with the external square wave, one of the EC mode selections must be used.

47.4.2 Internal Oscillator Parameters(1)

Table 47-8.

Standard Operating Conditions (unless otherwise stated)							
Param No.	**Sym.**	**Characteristic**	**Min.**	**Typ. †**	**Max.**	**Units**	**Conditions**
OS50	F_{HFOSC}	Precision Calibrated HFINTOSC Frequency	—	4 8 12 16 32 48 64	—	MHz	(**Note 2**)

.....continued

Standard Operating Conditions (unless otherwise stated)							
Param No.	Sym.	Characteristic	Min.	Typ. †	Max.	Units	Conditions
OS51	$F_{HFOSCLP}$	Low-Power Optimized HFINTOSC Frequency	0.91	1	1.09	MHz	Fundamental Freq. 1 MHz; -40°C to 85°C
			1.76	2	2.24	MHz	Fundamental Freq. 2 MHz; -40°C to 85°C
			—	—	—	MHz	Fundamental Freq. 1 MHz; -40°C to 125°C
			—	—	—	MHz	Fundamental Freq. 2 MHz; -40°C to125°C
OS52	F_{MFOSC}	Internal Calibrated MFINTOSC Frequency	—	500	—	kHz	
OS53*	F_{LFOSC}	Internal LFINTOSC Frequency	27.9	31	34.1	kHz	
OS54*	$T_{HFOSCST}$	HFINTOSC Wake-up from Sleep Start-up Time	—	13	40	µs	VREGPM = 00
			—	30	—	µs	VREGPM = 01
			—	84	—	µs	VREGPM = 10
			—	93	—	µs	VREGPM = 11
							System Clock at 4 MHz
OS56	$T_{LFOSCST}$	LFINTOSC Wake-up from Sleep Start-up Time	—	0.3	—	ms	

* These parameters are characterized but not tested.

† Data in “Typ” column is at 3.0V, 25°C unless otherwise stated. These parameters are for design guidance only and are not tested.

Notes:

1. To ensure these oscillator frequency tolerances, V_{DD} and V_{SS} must be capacitively decoupled as close to the device as possible. 0.1 µF and 0.01 µF values in parallel are recommended.
2. See the figure below.

Figure 47-5. Precision Calibrated HFINTOSC Frequency Accuracy Over Device V_{DD} and Temperature

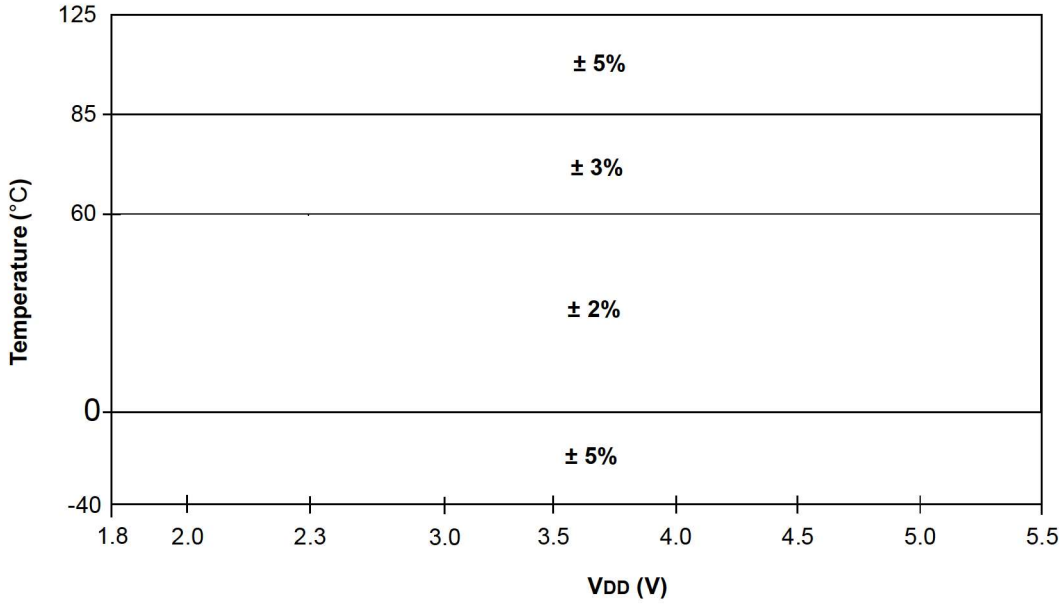

47.4.3 PLL Specifications

Table 47-9.

Standard Operating Conditions (unless otherwise stated)							
Param No.	**Sym.**	**Characteristic**	**Min.**	**Typ. †**	**Max.**	**Units**	**Conditions**
PLL01	F_{PLLIN}	PLL Input Frequency Range	4	—	16	MHz	
PLL02	F_{PLLOUT}	PLL Output Frequency Range	16	—	64	MHz	(**Note 1**)
PLL03*	F_{PLLST}	PLL Lock Time	—	200	—	µs	
PLL04*	F_{PLLJIT}	PLL Output Frequency Stability	-0.25	—	0.25	%	

* These parameters are characterized but not tested.

† Data in "Typ" column is at 3.0V, 25°C unless otherwise stated. These parameters are for design guidance only and are not tested.

Note:

1. The output frequency of the PLL must meet the F_{OSC} requirements listed in Parameter D002.

47.4.4 I/O and CLKOUT Timing Specifications

Figure 47-6. CLKOUT and I/O Timing

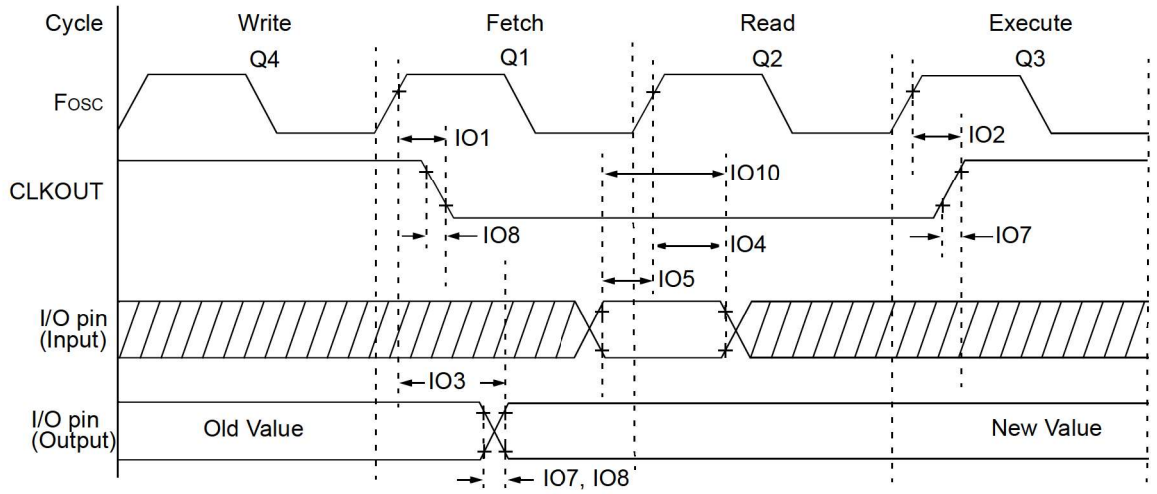

Table 47-10. I/O and CLKOUT Timing Specifications

Standard Operating Conditions (unless otherwise stated)							
Param No.	Sym.	Characteristic	Min.	Typ. †	Max.	Units	Conditions
IO1*	$T_{CLKOUTH}$	CLKOUT rising edge delay (rising edge F_{OSC} (Q1 cycle) to falling edge CLKOUT	—	—	70	ns	
IO2*	$T_{CLKOUTL}$	CLKOUT falling edge delay (rising edge F_{OSC} (Q3 cycle) to rising edge CLKOUT	—	—	72	ns	
IO3*	T_{IO_VALID}	Port output valid time (rising edge F_{OSC} (Q1 cycle) to port valid)	—	50	70	ns	
IO4*	T_{IO_SETUP}	Port input setup time (Setup time before rising edge F_{OSC} – Q2 cycle)	20	—	—	ns	
IO5*	T_{IO_HOLD}	Port input hold time (Hold time after rising edge F_{OSC} – Q2 cycle)	50	—	—	ns	
IO6*	T_{IOR_SLREN}	Port I/O rise time, slew rate enabled	—	25	—	ns	V_{DD} = 3.0V
IO7*	T_{IOR_SLRDIS}	Port I/O rise time, slew rate disabled	—	5	—	ns	V_{DD} = 3.0V
IO8*	T_{IOF_SLREN}	Port I/O fall time, slew rate enabled	—	25	—	ns	V_{DD} = 3.0V
IO9*	T_{IOF_SLRDIS}	Port I/O fall time, slew rate disabled	—	5	—	ns	V_{DD} = 3.0V
IO10*	T_{INT}	INT pin high or low time to trigger an interrupt	25	—	—	ns	
IO11*	T_{IOC}	Interrupt-on-Change minimum high or low time to trigger interrupt	25	—	—	ns	
* These parameters are characterized but not tested.							

47.4.5 Reset, WDT, Oscillator Start-up Timer, Power-up Timer, Brown-Out Reset and Low-Power Brown-Out Reset Specifications

Figure 47-7. Reset, Watchdog Timer, Oscillator Start-up Timer and Power-up Timer Timing

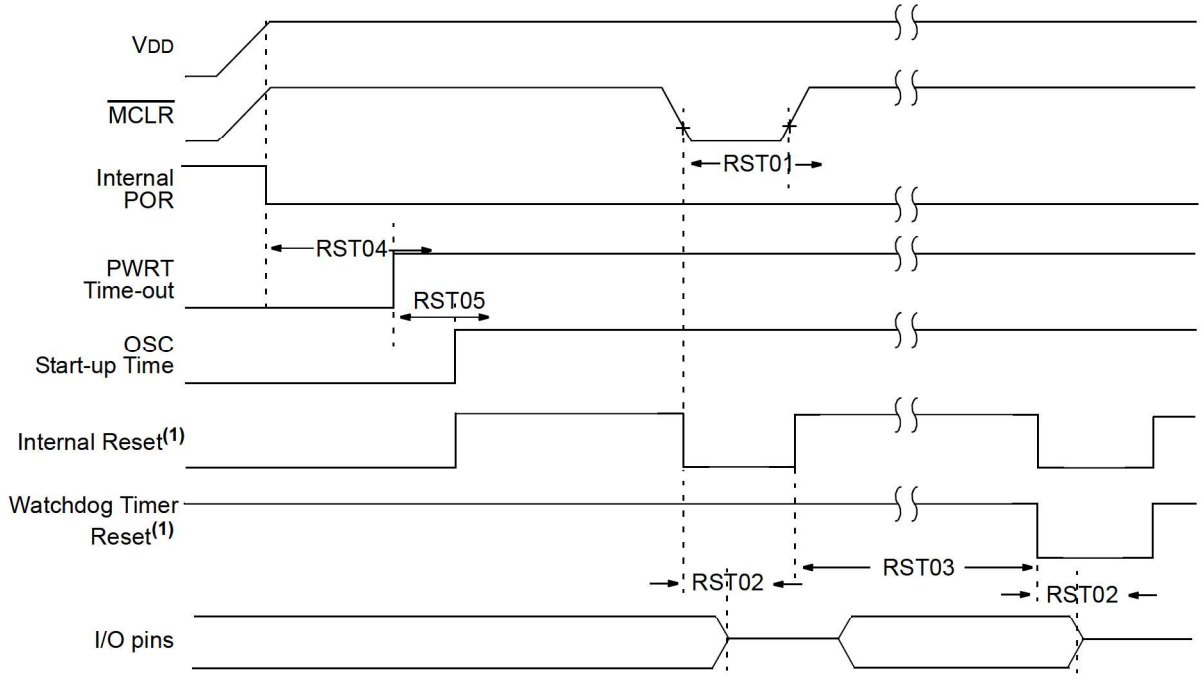

Note:

1. Asserted low.

Figure 47-8. Brown-out Reset Timing and Characteristics

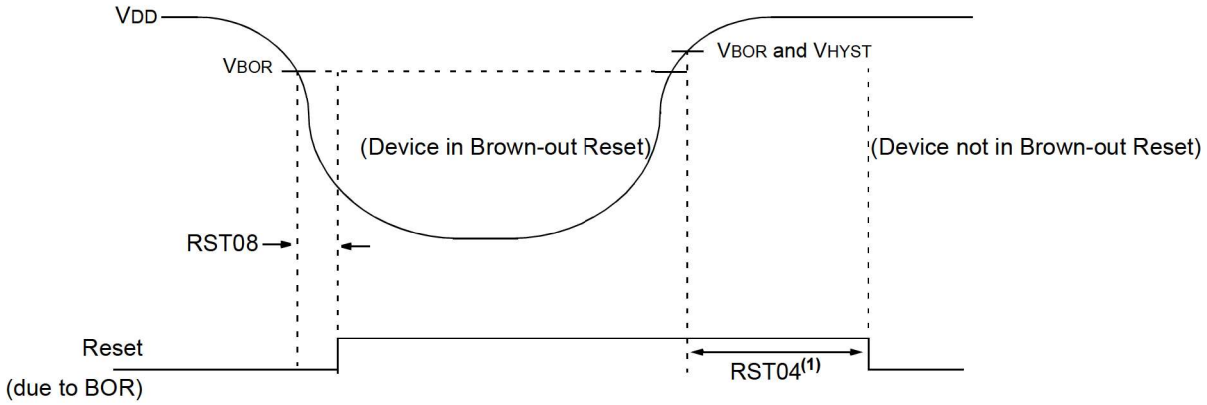

Note:

1. Only if PWRTE Configuration bit is programmed to '1'; 2 ms delay if PWRTE = 0.

Table 47-11.

Standard Operating Conditions (unless otherwise stated)							
Param No.	Sym.	Characteristic	Min.	Typ. †	Max.	Units	Conditions
RST01*	T_{MCLR}	MCLR Pulse Width Low to ensure Reset	—	—	—	µs	
RST02*	T_{IOZ}	I/O high-impedance from Reset detection	—	—	2	µs	

.....continued							
Standard Operating Conditions (unless otherwise stated)							
Param No.	**Sym.**	**Characteristic**	**Min.**	**Typ. †**	**Max.**	**Units**	**Conditions**
RST03	T_{WDT}	Watchdog Timer Time-out Period	—	16	—	ms	WDTCPS = 00100
RST04*	T_{PWRT}	Power-up Timer Period	—	65	—	ms	
RST05	T_{OST}	Oscillator Start-up Timer Period(1,2)	—	1024	—	T_{OSC}	
RST06	V_{BOR}	Brown-out Reset Voltage	2.7	2.85	3.0	V	BORV = 00
			2.55	2.7	2.85	V	BORV = 01
			2.3	2.45	2.6	V	BORV = 10
			1.8	1.9	2.1	V	BORV = 11
RST07	V_{BORHYS}	Brown-out Reset Hysteresis	—	60	—	mV	BORV = 00
RST08	T_{BORDC}	Brown-out Reset Response Time	—	3	—	µs	
RST09	V_{LPBOR}	Low-Power Brown-out Reset Voltage	1.8	1.9	2.2	V	

* These parameters are characterized but not tested.

† Data in "Typ" column is at 3.0V, 25°C unless otherwise stated. These parameters are for design guidance only and are not tested.

Notes:

1. By design, the Oscillator Start-up Timer (OST) counts the first 1024 cycles, independent of frequency.
2. To ensure these voltage tolerances, V_{DD} and V_{SS} must be capacitively decoupled as close to the device as possible. 0.1 µF and 0.01 µF values in parallel are recommended.

47.4.6 High/Low-Voltage Detect Characteristics

Table 47-12.

Standard Operating Conditions (unless otherwise stated)							
Param No.	**Sym.**	**Characteristic**	**Min.**	**Typ.**	**Max.**	**Units**	**Conditions**
HLVD01	V_{DET}	Voltage Detect	1.73(1)	1.90	2.07	V	HLVDSEL = 0000
			1.91	2.10	2.29	V	HLVDSEL = 0001
			2.05	2.25	2.45	V	HLVDSEL = 0010
			2.28	2.50	2.73	V	HLVDSEL = 0011
			2.37	2.60	2.83	V	HLVDSEL = 0100
			2.5	2.75	3.00	V	HLVDSEL = 0101
			2.64	2.90	3.16	V	HLVDSEL = 0110
			2.87	3.15	3.43	V	HLVDSEL = 0111
			3.05	3.35	3.65	V	HLVDSEL = 1000
			3.28	3.60	3.92	V	HLVDSEL = 1001
			3.41	3.75	4.09	V	HLVDSEL = 1010
			3.64	4.00	4.36	V	HLVDSEL = 1011
			3.82	4.20	4.58	V	HLVDSEL = 1100
			3.96	4.35	4.74	V	HLVDSEL = 1101
			4.23	4.65	5.07	V	HLVDSEL = 1110

.....continued							
Standard Operating Conditions (unless otherwise stated)							
Param No.	**Sym.**	**Characteristic**	**Min.**	**Typ.**	**Max.**	**Units**	**Conditions**

* These parameters are characterized but not tested.

† Data in "Typ" column is at 3.0V, 25°C unless otherwise stated. These parameters are for design guidance only and are not tested.

Note:

1. Device operation below V_{DD} = 1.8 V is not recommended.

47.4.7 Analog-to-Digital Converter (ADC) Accuracy Specifications(1,2)

Table 47-13.

Standard Operating Conditions (unless otherwise stated) **V_{DD} = 3.0V, T_A = 25°C, T_{AD} = 500ns**							
Param No.	**Sym.**	**Characteristic**	**Min.**	**Typ. †**	**Max.**	**Units**	**Conditions**
AD01	N_R	Resolution	—	—	12	bit	
AD02	E_{IL}	Integral Non-Linearity Error	—	±0.1	±2.0	LSb	ADC_{REF}+ = 3.0V, ADC_{REF}- = 0V
AD03	E_{DL}	Differential Non-Linearity Error	—	±0.1	±1.0	LSb	ADC_{REF}+ = 3.0V, ADC_{REF}- = 0V
AD04	E_{OFF}	Offset Error	—	0.5	6.0	LSb	ADC_{REF}+ = 3.0V, ADC_{REF}- = 0V
AD05	E_{GN}	Gain Error	—	±0.2	±6.0	LSb	ADC_{REF}+ = 3.0V, ADC_{REF}- = 0V
AD06	V_{ADREF}	ADC Reference Voltage (AD_{REF}+ - AD_{REF}-)	1.8	—	V_{DD}	V	
AD07	V_{AIN}	Full-Scale Range	AD_{REF}-	—	AD_{REF}+	V	
AD08	Z_{AIN}	Recommended Impedance of Analog Voltage Source	—	1	—	kΩ	
AD09	R_{VREF}	ADC Voltage Reference Ladder Impedance	—	50	—	kΩ	**(Note 3)**

* These parameters are characterized but not tested.

† Data in "Typ" column is at 3.0V, 25°C unless otherwise stated. These parameters are for design guidance only and are not tested.

Notes:

1. Total Absolute Error is the sum of the offset, gain and integral nonlinearity (INL) errors.
2. The ADC conversion result never decreases with an increase in the input and has no missing codes.
3. This is the impedance seen by the V_{REF} pads when the external reference pads are selected.

47.4.8 Analog-to-Digital Converter (ADC) Conversion Timing Specifications

Standard Operating Conditions (unless otherwise stated)							
Param No.	Sym.	Characteristic	Min.	Typ. †	Max.	Units	Conditions
AD20	T_{AD}	ADC Clock Period	0.5	—	9	µs	Using F_{OSC} as the ADC clock source ADOCS = 0
			—	2	—	µs	Using ADCRC as the ADC clock source ADOCS = 1
AD21	T_{CNV}	Conversion Time	—	14 T_{AD}+2T_{CY}	—	—	Using F_{OSC} as the ADC clock source ADOCS = 0
			—	16 T_{AD}+2T_{CY}	—	—	Using ADCRC as the ADC clock source ADOCS = 1
AD22	T_{HCD}	Sample-and-Hold Capacitor Disconnect Time	—	2 T_{AD}+1T_{CY}	—	—	Using F_{OSC} as the ADC clock source ADOCS = 0
			—	3 T_{AD}+2T_{CY}	—	—	Using ADCRC as the ADC clock source ADOCS = 1

* These parameters are characterized but not tested.

† Data in "Typ" column is at 3.0V, 25°C unless otherwise stated. These parameters are for design guidance only and are not tested.

Figure 47-9. ADC Conversion Timing (ADC Clock F_{OSC}-Based)

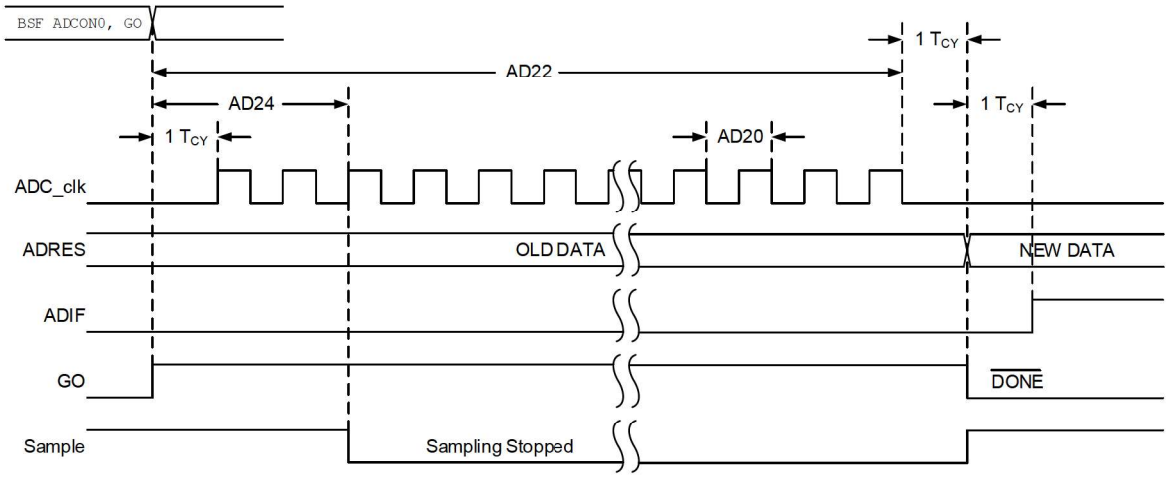

Figure 47-10. ADC Conversion Timing (ADC Clock from ADCRC)

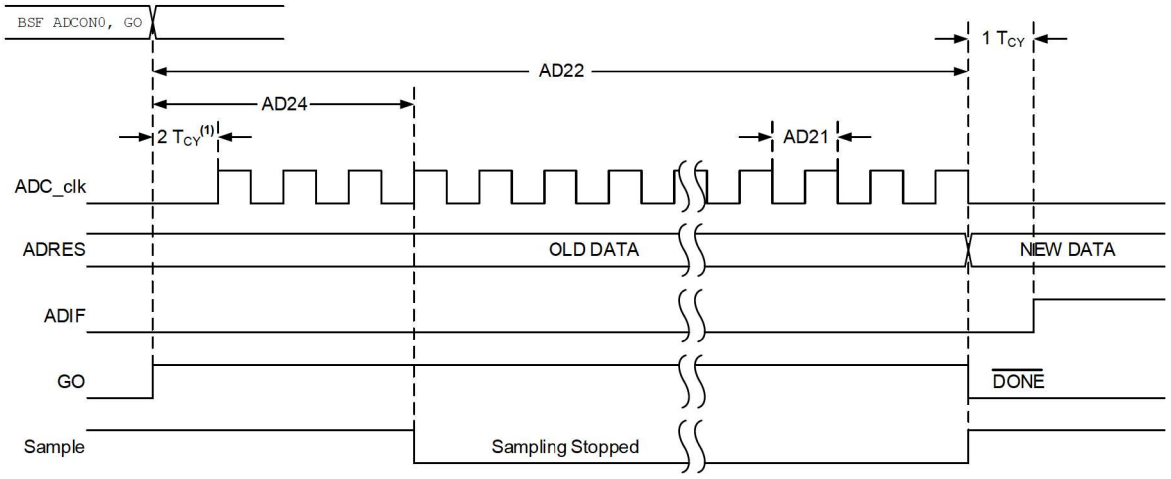

Note 1: If the ADC clock source is selected as ADCRC, a time of 1 TCY is added before the ADC clock starts. This allows the SLEEP instruction to be executed, if any.

47.4.9 Comparator Specifications

Table 47-14.

Standard Operating Conditions (unless otherwise stated) V_{DD} = 3.0V, T_A = 25°C							
Param No.	**Sym.**	**Characteristic**	**Min.**	**Typ. †**	**Max.**	**Units**	**Conditions**
CM01	V_{IOFF}	Input Offset Voltage	—	—	±50	mV	$V_{ICM} = V_{DD}/2$
CM02	V_{ICM}	Input Common Mode Range	GND	—	V_{DD}	V	
CM03	CMRR	Common Mode Input Rejection Ratio	—	50	—	dB	
CM04	V_{HYST}	Comparator Hysteresis	10	25	40	mV	
CM05	T_{RESP}(1)	Response Time, Rising Edge	—	300	600	ns	
		Response Time, Falling Edge	—	220	500	ns	

* These parameters are characterized but not tested.

† Data in "Typ" column is at 3.0V, 25°C unless otherwise stated. These parameters are for design guidance only and are not tested.

Note:

1. Response time measured with one comparator input at $V_{DD}/2$, while the other input transitions from V_{SS} to V_{DD}.

47.4.10 8-Bit DAC Specifications

Table 47-15.

Standard Operating Conditions (unless otherwise stated) V_{DD} = 3.0V, T_A = 25°C							
Param No.	**Sym.**	**Characteristic**	**Min.**	**Typ. †**	**Max.**	**Units**	**Conditions**
DSB01	V_{LSB}	Step Size	—	($V_{DACREF+}$ - $V_{DACREF-}$)/256	—	V	
DSB02	V_{ACC}	Absolute Accuracy	—	—	±0.5	LSb	
DSB03*	R_{UNIT}	Unit Resistor Value	—	20	—	kΩ	
DSB04*	T_{ST}	Settling Time(1)	—	10	—	µs	
DSB05*	V_{DBO}	DAC Buffer Offset(2)	—	20	65	mV	

* These parameters are characterized but not tested.

† Data in "Typ" column is at 3.0V, 25°C unless otherwise stated. These parameters are for design guidance only and are not tested.

Notes:

1. Settling time measured while DACR[7:0] transitions from 'b00000000 to 'b11111111
2. This parameter only applies to the buffered DAC1 module, and does not apply to the unbuffered DAC2.

47.4.11 Fixed Voltage Reference (FVR) Specifications

Table 47-16.

Standard Operating Conditions (unless otherwise stated)							
Param No.	**Sym.**	**Characteristic**	**Min.**	**Typ. †**	**Max.**	**Units**	**Conditions**
FVR01	$V_{FVR}1$	1x Gain (1.024V)	-4	—	-4	%	V_{DD} ≥ 2.5V, -40°C to 85°C
FVR02	$V_{FVR}2$	2x Gain (2.048V)	-4	—	+4	%	V_{DD} ≥ 2.5V, -40°C to 85°C
FVR03	$V_{FVR}4$	4x Gain (4.096V)	-5	—	+5	%	V_{DD} ≥ 4.75V, -40°C to 85°C
FVR04	T_{FVRST}	FVR Start-up Time	—	25	—	µs	

47.4.12 Zero-Cross Detect (ZCD) Specifications

Table 47-17.

Standard Operating Conditions (unless otherwise stated) V_{DD} = 3.0V, T_A = 25°C							
Param No.	**Sym.**	**Characteristic**	**Min.**	**Typ. †**	**Max.**	**Units**	**Conditions**
ZC01	V_{PINZC}	Voltage on Zero Cross Pin	—	0.9	—	V	
ZC02	I_{ZCD_MAX}	Maximum source or sink current	—	—	600	µA	
ZC03	T_{RESPH}	Response Time, Rising Edge	—	1	—	µs	
	T_{RESPL}	Response Time, Falling Edge	—	1	—	µs	

† Data in "Typ" column is at 3.0V, 25°C unless otherwise stated. These parameters are for design guidance only and are not tested.

47.4.13 Timer0 and Timer1 External Clock Requirements

Table 47-18.

Standard Operating Conditions (unless otherwise stated) Operating Temperature: -40°C≤T_A≤+125°C								
Param No.	**Sym.**	**Characteristic**		**Min.**	**Typ. †**	**Max.**	**Units**	**Conditions**
40*	T_T0H	T0CKI High Pulse Width	No Prescaler	$0.5T_{CY}+20$	—	—	ns	
			With Prescaler	10	—	—	ns	
41*	T_T0L	T0CKI Low Pulse Width	No Prescaler	$0.5T_{CY}+20$	—	—	ns	
			With Prescaler	10	—	—	ns	
42*	T_T0P	T0CKI Period		Greater of: 20 or (T_{CY} +40)/N	—	—	ns	N = Prescale value
45*	T_T1H	T1CKI High Time	Synchronous, No Prescaler	$0.5T_{CY}+20$	—	—	ns	
			Synchronous, with Prescaler	15	—	—	ns	
			Asynchronous	30	—	—	ns	
46*	T_T1L	T1CKI Low Time	Synchronous, No Prescaler	$0.5T_{CY}+20$	—	—	ns	
			Synchronous, with Prescaler	15	—	—	ns	
			Asynchronous	30	—	—	ns	
47*	T_T1P	T1CKI Input Period	Synchronous	Greater of: 30 or (T_{CY} +40)/N	—	—	ns	N = Prescale value
			Asynchronous	60	—	—	ns	
49*	$TCKEZ_{TMR}1$	Delay from External Clock Edge to Timer Increment		2 T_{OSC}	—	7 T_{OSC}	—	Timers in Sync mode

* These parameters are characterized but not tested.

† Data in "Typ" column is at 3.0V, 25°C unless otherwise stated. These parameters are for design guidance only and are not tested.

Figure 47-11. Timer0 and Timing1 External Clock Timings

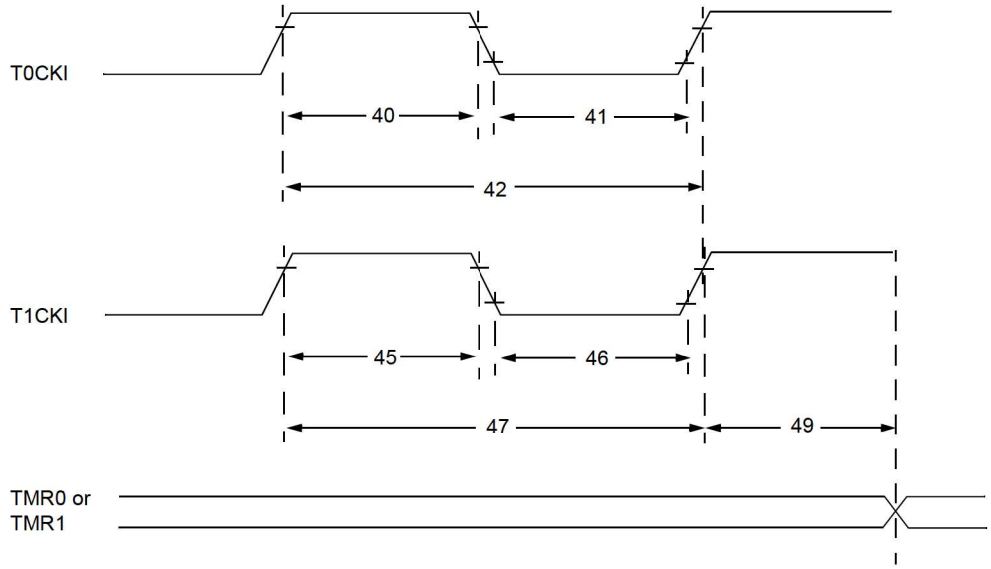

47.4.14 Capture/Compare/PWM Requirements (CCP)

Table 47-19.

Standard Operating Conditions (unless otherwise stated) Operating Temperature: -40°C ≤ T_A ≤ +125°C								
Param No.	**Sym.**	**Characteristic**		**Min.**	**Typ. †**	**Max.**	**Units**	**Conditions**
CC01*	$T_{CC}L$	CCPx Input Low Time	No Prescaler	$0.5T_{CY}$+20	—	—	ns	
			With Prescaler	20	—	—	ns	
CC02*	$T_{CC}H$	CCPx Input High Time	No Prescaler	$0.5T_{CY}$+20	—	—	ns	
			With Prescaler	20	—	—	ns	
CC03*	$T_{CC}P$	CCPx Input Period		$(3T_{CY}+40)/N$	—	—	ns	N = Prescale value

* These parameters are characterized but not tested.

† Data in "Typ" column is at 3.0V, 25°C unless otherwise stated. These parameters are for design guidance only and are not tested.

Figure 47-12. Capture/Compare/PWM Timings (CCP)

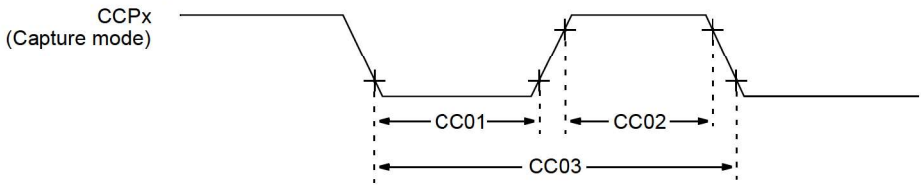

Note: Refer to Load Conditions for more details.

47.4.15 SPI Mode Requirements

Table 47-20. SPI MASTER MODE

Standard Operating Conditions (unless otherwise stated)							
Param No.	Sym.	Characteristic	Min.	Typ. †	Max.	Units	Conditions
	T_{SCK}	SCK Cycle Time (2x Prescaled)	61	—	—	ns	Transmit only mode
			—	16(1)	—	MHz	
			95	—	—	ns	Full-Duplex mode
			—	10(1)	—	MHz	
SP70*	$T_{SS}L2_{SC}H$, $T_{SS}L2_{SC}L$	SDO to SCK↓ or SCK↑ input	T_{SCK}	—	—	ns	FST = 0
			0	—	—	ns	FST = 1
SP71*	$T_{SC}H$	SCK output high time	0.5 T_{SCK} - 12	—	0.5 T_{SCK} + 12	ns	
SP72*	$T_{SC}L$	SCK output low time	0.5 T_{SCK} - 12	—	0.5 T_{SCK} + 12	ns	
SP73*	$T_{DI}V2_{SC}H$, $T_{DI}V2_{SC}L$	Setup time of SDI data input to SCK edge	85	—	—	ns	
SP74*	$T_{SC}H2_{DI}L$, $T_{SC}L2_{DI}L$	Hold time of SDI data input to SCK edge	0	—	—	ns	
		Hold time of SDI data input to final SCK	0.5 T_{SCK}			ns	CKE = 0, SMP = 1
SP75*	$T_{DO}R$	SDO data output rise time	—	10	25	ns	C_L = 50 pF
SP76*	$T_{DO}F$	SDO data output fall time	—	10	25	ns	C_L = 50 pF
SP78*	$T_{SC}R$	SCK output rise time	—	10	25	ns	C_L = 50 pF
SP79*	$T_{SC}F$	SCK output fall time	—	10	25	ns	C_L = 50 pF
SP80*	$T_{SC}H2_{DO}V$, $T_{SC}L2_{DO}V$	SDO data output valid after SCK edge	-15	—	15	ns	C_L = 50 pF
SP81*	$T_{DO}V2_{SC}H$, $T_{DO}V2_{SC}L$	SDO data output valid to first SCK edge	T_{SCK} - 10	—	—	ns	C_L = 50 pF CKE = 1
SP82*	$T_{SS}L2_{DO}V$	SDO data output valid after SS↓ edge	—	—	50	ns	C_L = 20 pF
SP83*	$T_{SC}H2_{SS}H$, $T_{SC}L2_{SS}H$	$\overline{SS}$ ↑ after last SCK edge	T_{SCK} - 10	—	—	ns	
SP84*	$T_{SS}H2_{SSL}$	$\overline{SS}$ ↑ to $\overline{SS}$↓ edge	T_{SCK} - 10	—	—	ns	

.....continued

Standard Operating Conditions (unless otherwise stated)							
Param No.	Sym.	Characteristic	Min.	Typ. †	Max.	Units	Conditions

* These parameters are characterized but not tested.

† Data in "Typ" column is at 3.0V, 25°C unless otherwise stated. These parameters are for design guidance only and are not tested.

Note:

1. SMP bit in the SPIxCON1 register must be set and the slew rate control must be disabled on the clock and data pins (clear the corresponding bits in SLRCONx register) for SPI to operate over 4 MHz.

Table 47-21. SPI SLAVE MODE

Standard Operating Conditions (unless otherwise stated)							
Param No.	Sym.	Characteristic	Min.	Typ. †	Max.	Units	Conditions
	T_{SCK}	SCK Total Cycle Time	47	—	—	ns	Receive Only mode
			—	20(1)	—	MHz	
			95	—	—	ns	Full-Duplex mode
			—	10(1)	—	MHz	
SP70*	$T_{SS}L2_{SC}H$, $T_{SS}L2_{SC}L$	$\overline{SS}$↓ to SCK↓ or SCK↑ input	0	—	—	ns	CKE = 0
			25	—	—	ns	CKE = 1
SP71*	$T_{SC}H$	SCK input high time	20	—	—	ns	
SP72*	$T_{SC}L$	SCK input low time	20	—	—	ns	
SP73*	$T_{DI}V2_{SC}H$, $T_{DI}V2_{SC}L$	Setup time of SDI data input to SCK edge	10	—	—	ns	
SP74*	$T_{SC}H2_{DI}L$, $T_{SC}L2_{DI}L$	Hold time of SDI data input to SCK edge	0	—	—	ns	
SP75*	$T_{DO}R$	SDO data output rise time	—	10	25	ns	C_L = 50 pF
SP76*	$T_{DO}F$	SDO data output fall time	—	10	25	ns	C_L = 50 pF
SP77*	$T_{SS}H2_{DO}Z$	$\overline{SS}$↑ to SDO output high-impedance	—	—	85	ns	
SP80*	$T_{SC}H2_{DO}V$, $T_{SC}L2_{DO}V$	SDO data output valid after SCK edge	—	—	85	ns	
SP82*	$T_{SS}L2_{DO}V$	SDO data output valid after $\overline{SS}$↓ edge	—	—	85	ns	
SP83*	$T_{SC}H2_{SS}H$, $T_{SC}L2_{SS}H$	$\overline{SS}$ ↑ after SCK edge	20	—	—	ns	
SP84*	$T_{SS}H2_{SSL}$	$\overline{SS}$ ↑ to $\overline{SS}$↓ edge	47	—	—	ns	

.....continued

Standard Operating Conditions (unless otherwise stated)							
Param No.	Sym.	Characteristic	Min.	Typ. †	Max.	Units	Conditions

* These parameters are characterized but not tested.

† Data in "Typ" column is at 3.0V, 25°C unless otherwise stated. These parameters are for design guidance only and are not tested.

Note:

1. SMP bit in the SPIxCON1 register must be set and the slew rate control must be disabled on the clock and data pins (clear the corresponding bits in SLRCONx register) for SPI to operate over 4 MHz.

Figure 47-13. SPI Master Mode Timing (CKE = 0, SMP = 0)

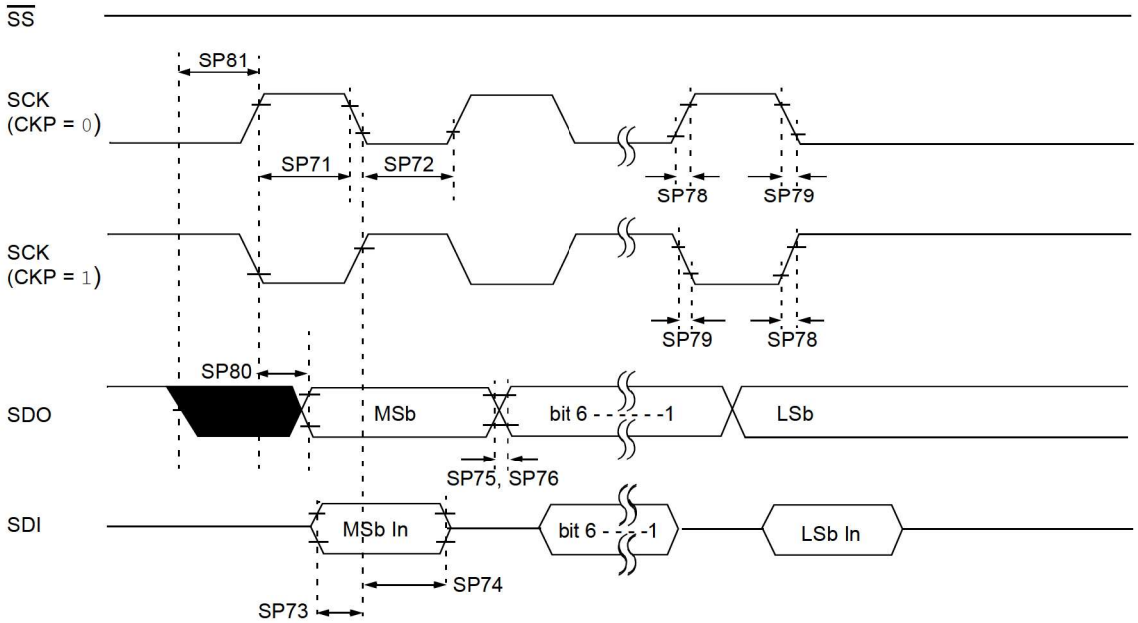

Note: Refer to Load Conditions for more details.

Figure 47-14. SPI Master Mode Timing (CKE = 1, SMP = 1)

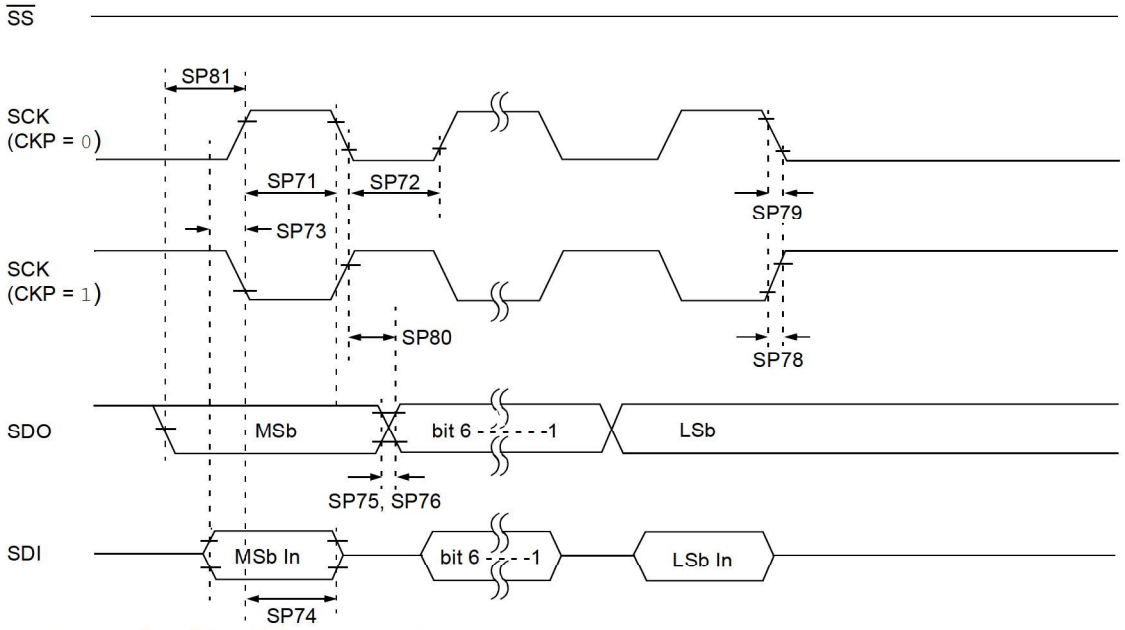

Note: Refer to Load Conditions for more details.

Figure 47-15. SPI Slave Mode Timing (CKE = 0)

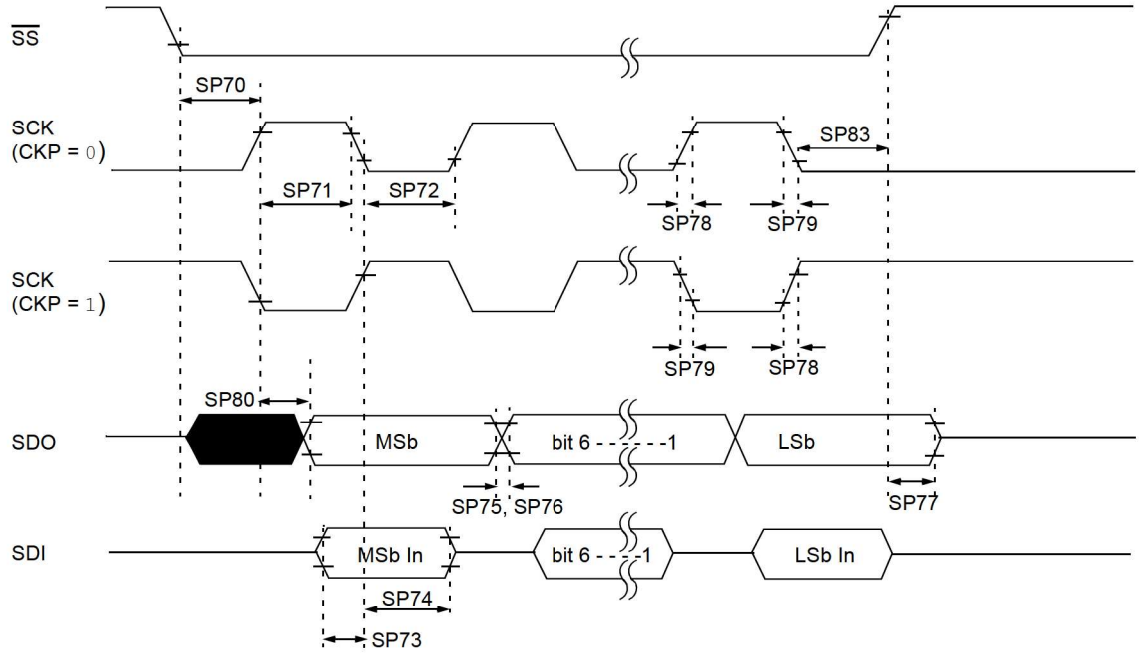

Note: Refer to Load Conditions for more details.

Figure 47-16. SPI Slave Mode Timing (CKE = 1)

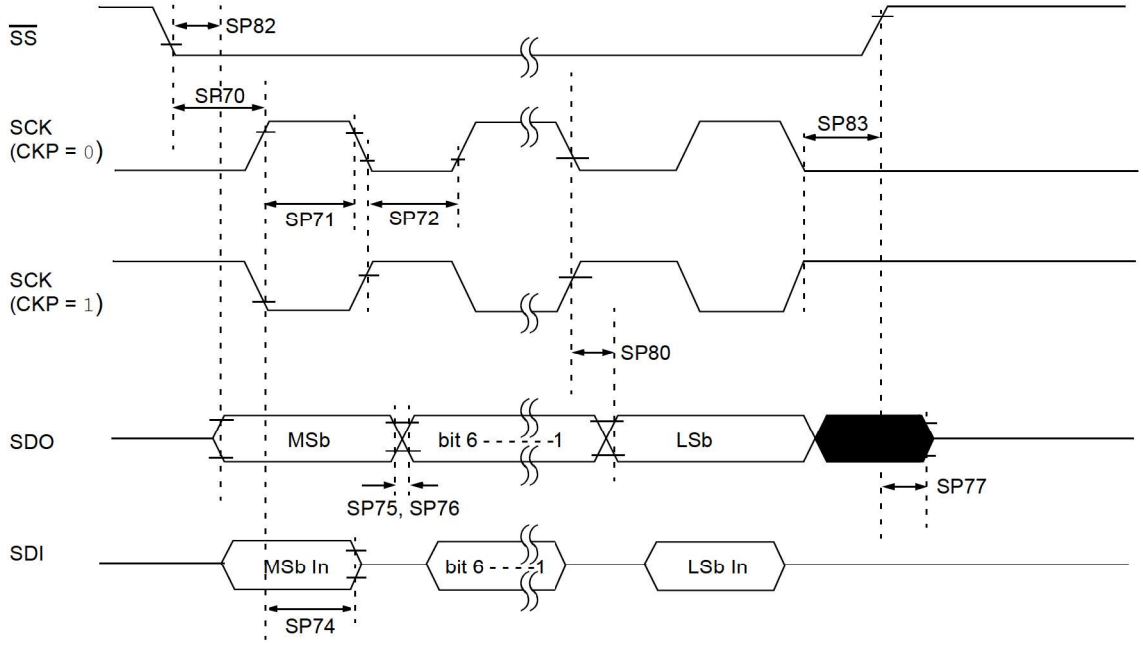

Note: Refer to Load Conditions for more details.

47.4.16 I²C Bus Start/Stop Bits Requirements

Table 47-22.

Standard Operating Conditions (unless otherwise stated)								
Param. No.	**Sym.**	**Characteristic**		**Min.**	**Typ. †**	**Max.**	**Units**	**Conditions**
SP90*	$T_{SU:STA}$	Start condition Setup time	100 kHz mode	4700	—	—	ns	Only relevant for Repeated Start condition
			400 kHz mode	600	—	—		
			1 MHz mode	260	—	—		
SP91*	$T_{HD:STA}$	Start condition Hold time	100 kHz mode	4000	—	—	ns	After this period, the first clock pulse is generated
			400 kHz mode	600	—	—		
			1 MHz mode	260	—	—		
SP92*	$T_{SU:STO}$	Stop condition Setup time	100 kHz mode	4000	—	—	ns	
			400 kHz mode	600	—	—		
			1 MHz mode	260	—	—		
SP93*	$T_{HD:STO}$	Stop condition Hold time	100 kHz mode	4700	—	—	ns	
			400 kHz mode	1300	—	—		
			1 MHz mode	500	—	—		
* These parameters are characterized but not tested.								

Figure 47-17. I²C Bus Start/Stop Bits Timing

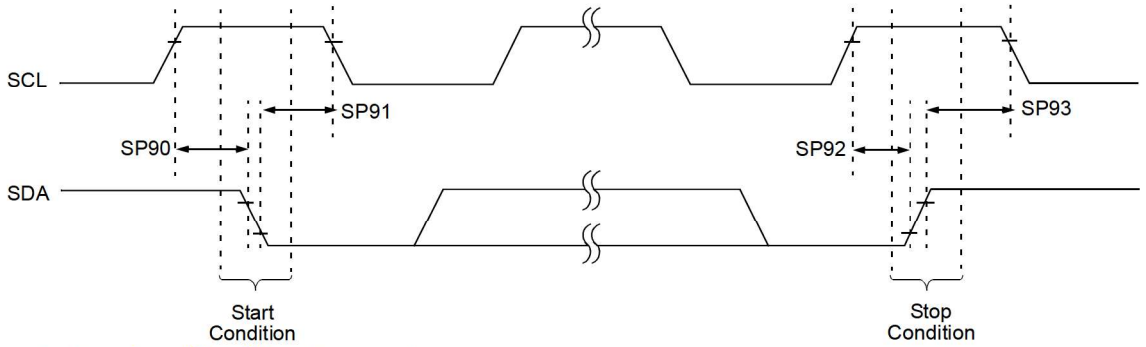

Note: Refer to Load Conditions for more details.

47.4.17 I²C Bus Data Requirements

Table 47-23.

Standard Operating Conditions (unless otherwise stated)							
Param. No.	**Sym.**	**Characteristic**		**Min.**	**Max.**	**Units**	**Conditions**
SP100*	T_{HIGH}	Clock high time	100 kHz mode	4000	—	ns	Device must operate at a minimum of 1.5 MHz
			400 kHz mode	600	—	ns	Device must operate at a minimum of 10 MHz
			1 MHz mode	260	—	ns	Device must operate at a minimum of 10 MHz
SP101*	T_{LOW}	Clock low time	100 kHz mode	4700	—	ns	Device must operate at a minimum of 1.5 MHz
			400 kHz mode	1300	—	ns	Device must operate at a minimum of 10 MHz
			1 MHz mode	500	—	ns	Device must operate at a minimum of 10 MHz
SP102*	T_R	SDA and SCL rise time	100 kHz mode	—	1000	ns	
			400 kHz mode	20	300	ns	C_B is specified to be from 10-400 pF
			1 MHz mode	—	120		

.....continued

Standard Operating Conditions (unless otherwise stated)							
Param. No.	Sym.	Characteristic		Min.	Max.	Units	Conditions
SP103*	T_F	SDA and SCL fall time	100 kHz mode	—	250	ns	
			400 kHz mode	20 × (V_{DD}/5.5V)	250	ns	C_B is specified to be from 10-400 pF
			1 MHz mode	20 × (V_{DD}/5.5V)	120	ns	
SP106*	$T_{HD:DAT}$	Data input hold time	100 kHz mode	0	—	ns	
			400 kHz mode	0	—	ns	
			1 MHz mode	0	—	ns	
SP107*	$T_{SU:DAT}$	Data input setup time	100 kHz mode	250	—	ns	**(Note 2)**
			400 kHz mode	100	—	ns	
			1 MHz mode	50	—	ns	
SP109*	T_{AA}	Output valid from clock	100 kHz mode	—	3450	ns	**(Note 1)**
			400 kHz mode	—	900	ns	
			1 MHz mode		450	ns	
SP110*	T_{BUF}	Bus free time	100 kHz mode	4700	—	ns	Time the bus must be free before a new transmission can start
			400 kHz mode	1300	—	ns	
			1 MHz mode	500	—	ns	
SP111	C_B	Bus capacitive loading	100 kHz mode	—	400	pF	
			400 kHz mode	—	400	pF	
			1 MHz mode	—	26	pF	**(Note 3)**

.....continued

Standard Operating Conditions (unless otherwise stated)						
Param. No.	Sym.	Characteristic	Min.	Max.	Units	Conditions

* These parameters are characterized but not tested.

Notes:

1. As a transmitter, the device must provide this internal minimum delay time to bridge the undefined region (min. 300 ns) of the falling edge of SCL to avoid unintended generation of Start or Stop conditions.
2. A Fast mode (400 kHz) I^2C bus device can be used in a Standard mode (100 kHz) I^2C bus system, but the requirement $T_{SU:DAT} \geq 250$ ns must then be met. This will automatically be the case if the device does not stretch the low period of the SCL signal. If such a device does stretch the low period of the SCL signal, it must output the next data bit to the SDA line TR max. + $T_{SU:DAT}$ = 1000 + 250 = 1250 ns (according to the Standard mode I^2C bus specification), before the SCL line is released.
3. Using internal I^2C pull-ups. For greater bus capacitance use external pull-ups.

Figure 47-18. I^2C Bus Data Timing

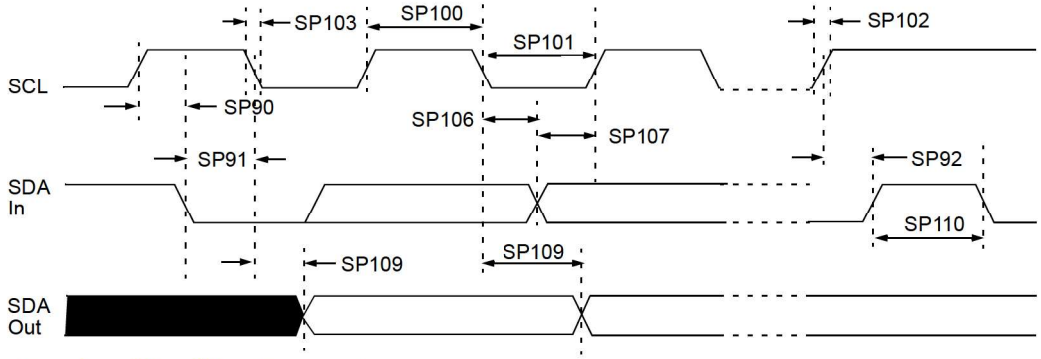

Note: Refer to Load Conditions for more details.

47.4.18 Configurable Logic Cell (CLC) Characteristics

Table 47-24.

Standard Operating Conditions (unless otherwise stated) Operating Temperature: -40°C≤T_A≤+125°C								
Param No.	Sym.	Characteristic		Min.	Typ. †	Max.	Units	Conditions
CLC01*	T_{CLCIN}	CLC input time		—	7	IO5	ns	**(Note 1)**
CLC02*	T_{CLC}	CLC module input to output propagation time		—	24	—	ns	V_{DD} = 1.8V
				—	12	—	ns	V_{DD} > 3.6V
CLC03*	T_{CLCOUT}	CLC output time	Rise Time	—	IO6	—	—	**(Note 1)**
			Fall Time	—	IO8	—	—	**(Note 1)**
CLC04*	F_{CLCMAX}	CLC maximum switching frequency		—	—	OS20	—	

* These parameters are characterized but not tested.

† Data in "Typ" column is at 3.0V, 25°C unless otherwise stated. These parameters are for design guidance only and are not tested.

Note:

1. See **"I/O and CLKOUT Timing Specifications"** section for OS7, OS8 and OS9 rise and fall times.

Figure 47-19. CLC Propagation Timing

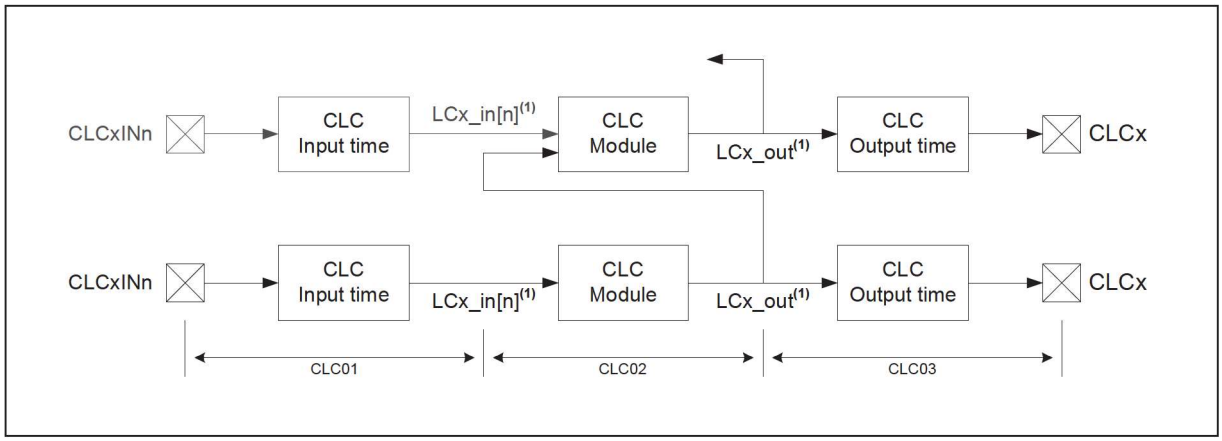

47.4.19 Temperature Indicator Requirements

Standard Operating Conditions (unless otherwise stated)								
Param No.	**Sym.**	**Characteristic**		**Min.**	**Typ. †**	**Max.**	**Units**	**Conditions**
TS01*	T_{ACQMIN}	Minimum ADC Acquisition Time Delay		—	25	—	µs	
TS02*	M_V	Voltage Sensitivity	High Range	—	-3.75	—	mV/°C	TSRNG = 1
			Low Range	—	-2.75	—	mV/°C	TSRNG = 0

* These parameters are characterized but not tested.

† Data in "Typ" column is at 3.0V, 25°C unless otherwise stated. These parameters are for design guidance only and are not tested.

48. DC and AC Characteristics Graphs and Tables

Graphs and tables are not available at this time.

49. Packaging Information

Package Marking Information

Rev. 30-009000A
5/17/2017

Legend:	XX...X	Customer-specific information or Microchip part number
	Y	Year code (last digit of calendar year)
	YY	Year code (last 2 digits of calendar year)
	WW	Week code (week of January 1 is week '01')
	NNN	Alphanumeric traceability code
	(e3)	b-free JEDEC ® designator for Matte Tin (Sn)
	*	This package is Pb-free. The Pb-free JEDEC designator ((e3)) can be found on the outer packaging for this package.
Note:	In the event the full Microchip part number cannot be marked on one line, it will be carried over to the next line, thus limiting the number of available characters for customer-specific information.	

Rev. 30-000014B
09/21/2017

14-Lead TSSOP (4.4 mm)

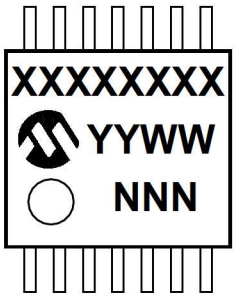

Example

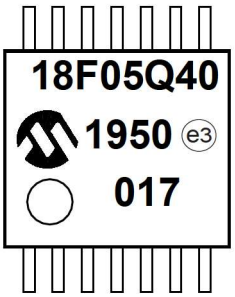

14-Lead SOIC (3.90 mm)

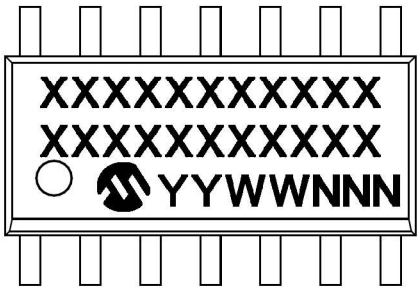

Example

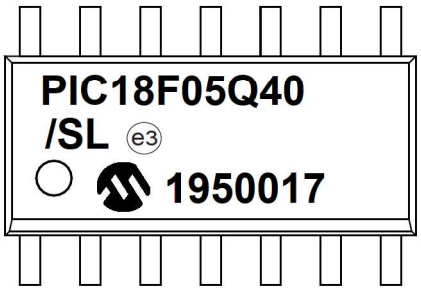

Rev. 30-000020A
09/21/2017

20-Lead PDIP (300 mil)

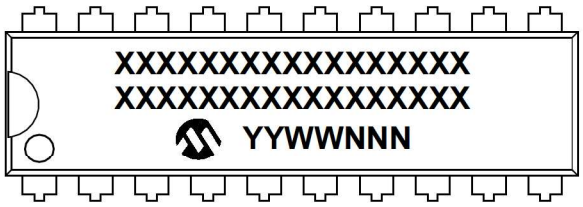

Example

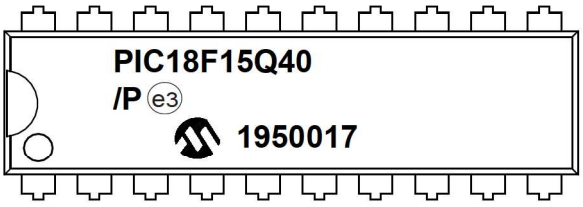

Rev. 30-000020C
09/21/2017

20-Lead SOIC (7.50 mm)

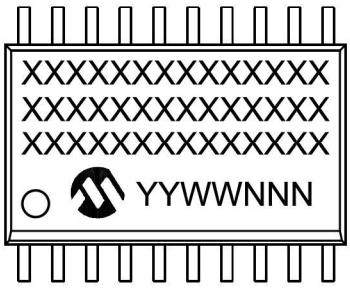

Example

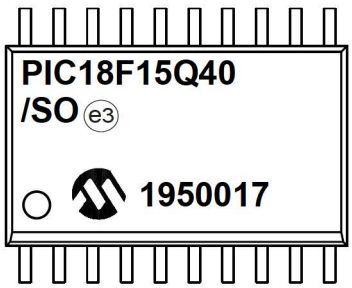

Rev. 30-000020C
09/21/2017

20-Lead SOIC (7.50 mm)

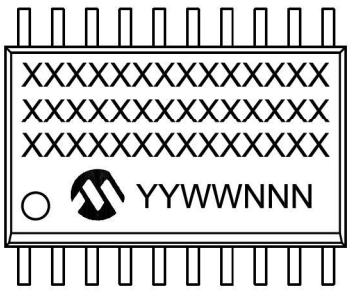

Example

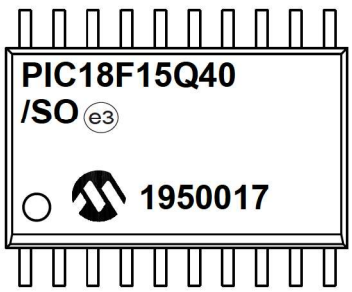

Rev. 30-000020E
12/10/2019

20-Lead VQFN (3x3x0.9 mm)

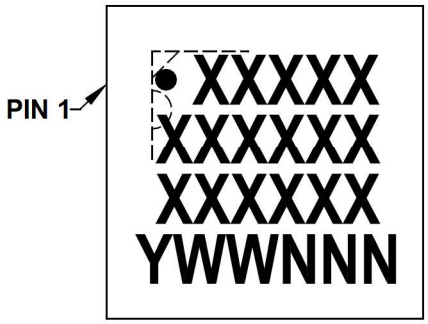

Example

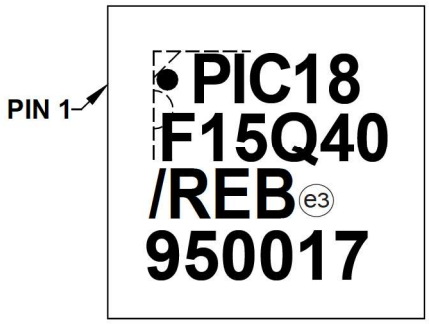

49.1 Package Details

The following sections give the technical details of the packages.

14-Lead Plastic Small Outline (SL) - Narrow, 3.90 mm Body [SOIC]

Note: For the most current package drawings, please see the Microchip Packaging Specification located at http://www.microchip.com/packaging

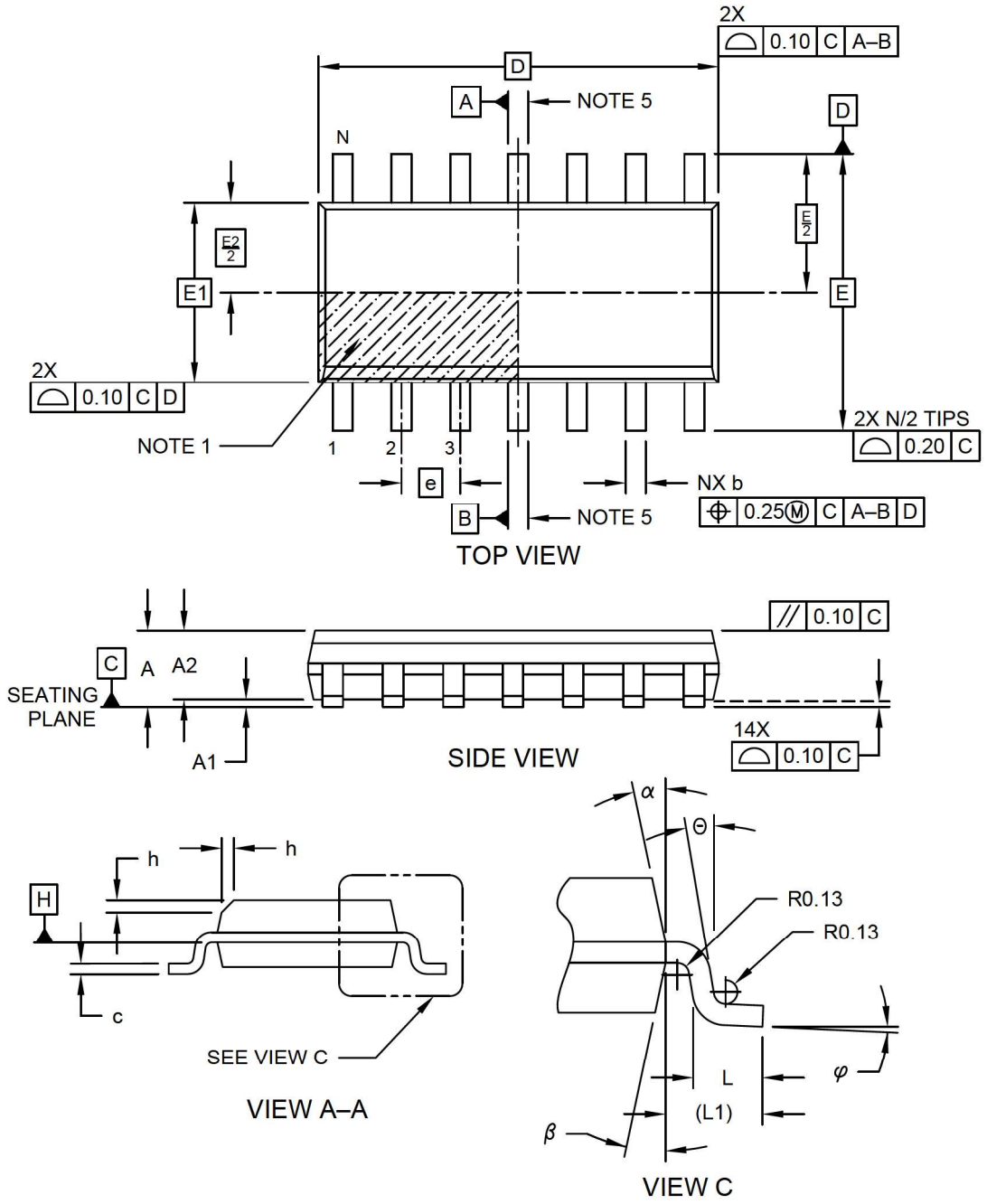

Microchip Technology Drawing No. C04-065-SL Rev D Sheet 1 of 2

14-Lead Plastic Small Outline (SL) - Narrow, 3.90 mm Body [SOIC]

Note: For the most current package drawings, please see the Microchip Packaging Specification located at http://www.microchip.com/packaging

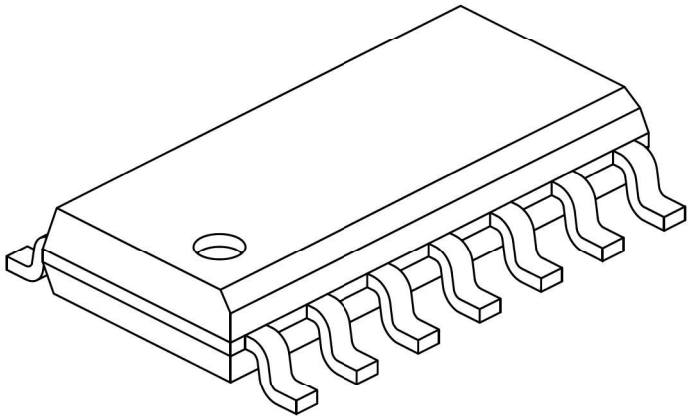

Units		MILLIMETERS		
Dimension Limits		MIN	NOM	MAX
Number of Pins	N		14	
Pitch	e		1.27 BSC	
Overall Height	A	-	-	1.75
Molded Package Thickness	A2	1.25	-	-
Standoff §	A1	0.10	-	0.25
Overall Width	E		6.00 BSC	
Molded Package Width	E1		3.90 BSC	
Overall Length	D		8.65 BSC	
Chamfer (Optional)	h	0.25	-	0.50
Foot Length	L	0.40	-	1.27
Footprint	L1		1.04 REF	
Lead Angle	Θ	0°	-	-
Foot Angle	φ	0°	-	8°
Lead Thickness	c	0.10	-	0.25
Lead Width	b	0.31	-	0.51
Mold Draft Angle Top	α	5°	-	15°
Mold Draft Angle Bottom	β	5°	-	15°

Notes:

1. Pin 1 visual index feature may vary, but must be located within the hatched area.
2. § Significant Characteristic
3. Dimension D does not include mold flash, protrusions or gate burrs, which shall not exceed 0.15 mm per end. Dimension E1 does not include interlead flash or protrusion, which shall not exceed 0.25 mm per side.
4. Dimensioning and tolerancing per ASME Y14.5M
   BSC: Basic Dimension. Theoretically exact value shown without tolerances.
   REF: Reference Dimension, usually without tolerance, for information purposes only.
5. Datums A & B to be determined at Datum H.

Microchip Technology Drawing No. C04-065-SL Rev D Sheet 2 of 2

14-Lead Plastic Small Outline (SL) - Narrow, 3.90 mm Body [SOIC]

Note: For the most current package drawings, please see the Microchip Packaging Specification located at http://www.microchip.com/packaging

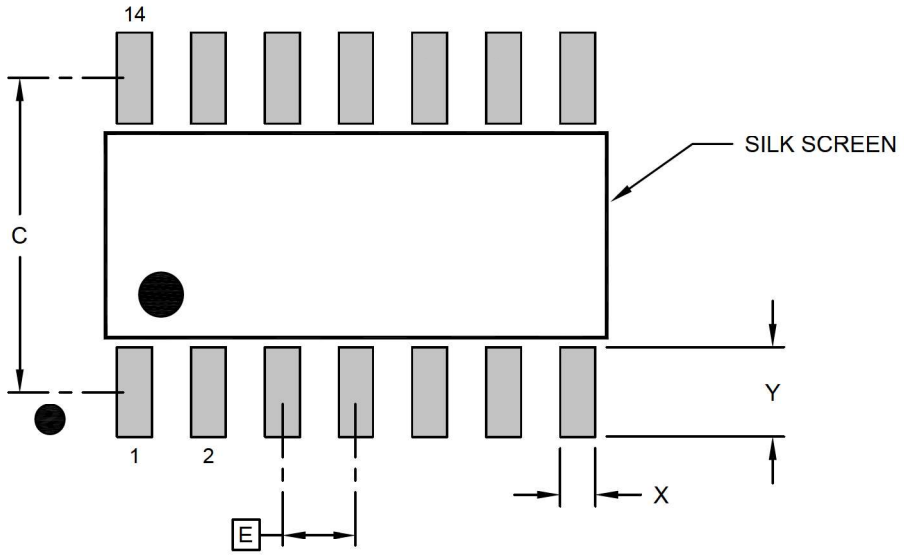

RECOMMENDED LAND PATTERN

Units		MILLIMETERS		
Dimension Limits		MIN	NOM	MAX
Contact Pitch	E		1.27 BSC	
Contact Pad Spacing	C		5.40	
Contact Pad Width (X14)	X			0.60
Contact Pad Length (X14)	Y			1.55

Notes:

1. Dimensioning and tolerancing per ASME Y14.5M
   BSC: Basic Dimension. Theoretically exact value shown without tolerances.

Microchip Technology Drawing No. C04-2065-SL Rev D

14Lead Thin Shrink Small Outline Package [ST] 4.4 mm Body [TSSOP]

Note: For the most current package drawings, please see the Microchip Packaging Specification located at http://www.microchip.com/packaging

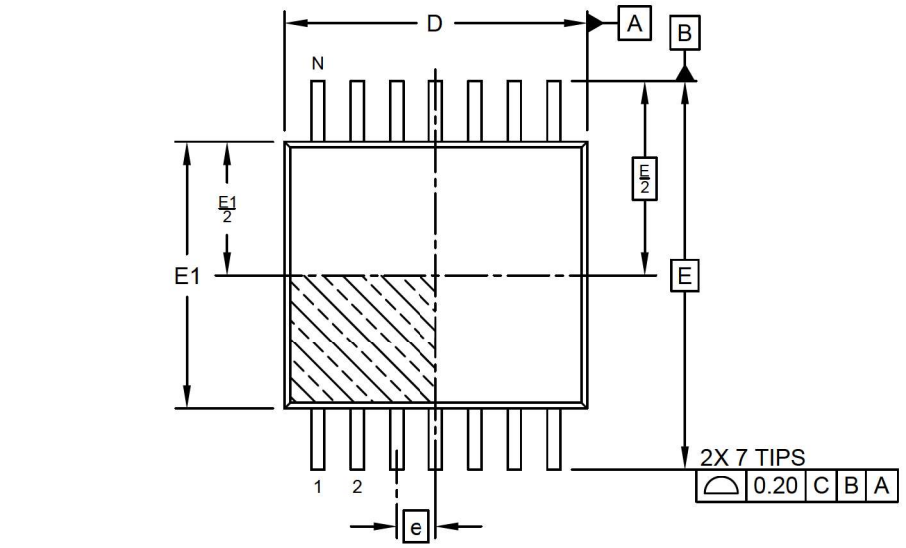

TOP VIEW

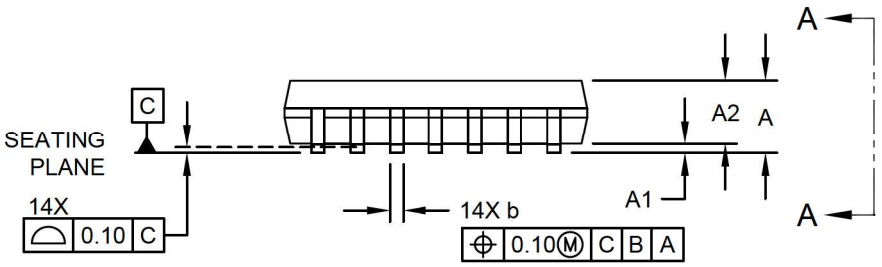

SIDE VIEW

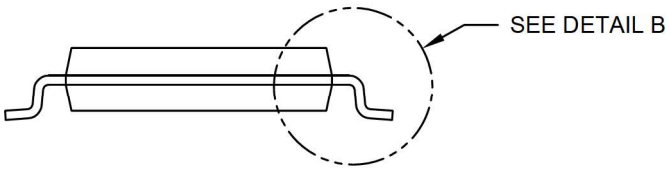

VIEW A–A

Microchip Technology Drawing C04-087 Rev D Sheet 1 of 2

14Lead Thin Shrink Small Outline Package [ST] 4.4 mm Body [TSSOP]

Note: For the most current package drawings, please see the Microchip Packaging Specification located at http://www.microchip.com/packaging

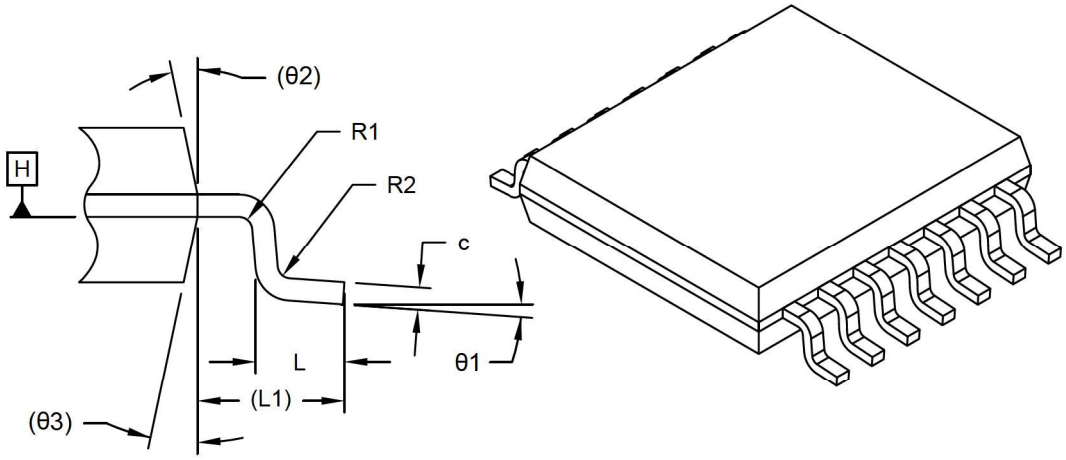

DETAIL B

Units		MILLIMETERS		
Dimension Limits		MIN	NOM	MAX
Number of Terminals	N		14	
Pitch	e		0.65 BSC	
Overall Height	A	–	–	1.20
Standoff	A1	0.05	–	0.15
Molded Package Thickness	A2	0.80	1.00	1.05
Overall Length	D	4.90	5.00	5.10
Overall Width	E		6.40 BSC	
Molded Package Width	E1	4.30	4.40	4.50
Terminal Width	b	0.19	–	0.30
Terminal Thickness	c	0.09	–	0.20
Terminal Length	L	0.45	0.60	0.75
Footprint	L1		1.00 REF	
Lead Bend Radius	R1	0.09	–	–
Lead Bend Radius	R2	0.09	–	–
Foot Angle	θ1	0°	–	8°
Mold Draft Angle	θ2	–	12° REF	–
Mold Draft Angle	θ3	–	12° REF	–

Notes:

1. Pin 1 visual index feature may vary, but must be located within the hatched area.
2. Dimensioning and tolerancing per ASME Y14.5M
   BSC: Basic Dimension. Theoretically exact value shown without tolerances.
   REF: Reference Dimension, usually without tolerance, for information purposes only.

Microchip Technology Drawing C04-087 Rev D Sheet 2 of 2

14Lead Thin Shrink Small Outline Package [ST] 4.4 mm Body [TSSOP]

Note: For the most current package drawings, please see the Microchip Packaging Specification located at http://www.microchip.com/packaging

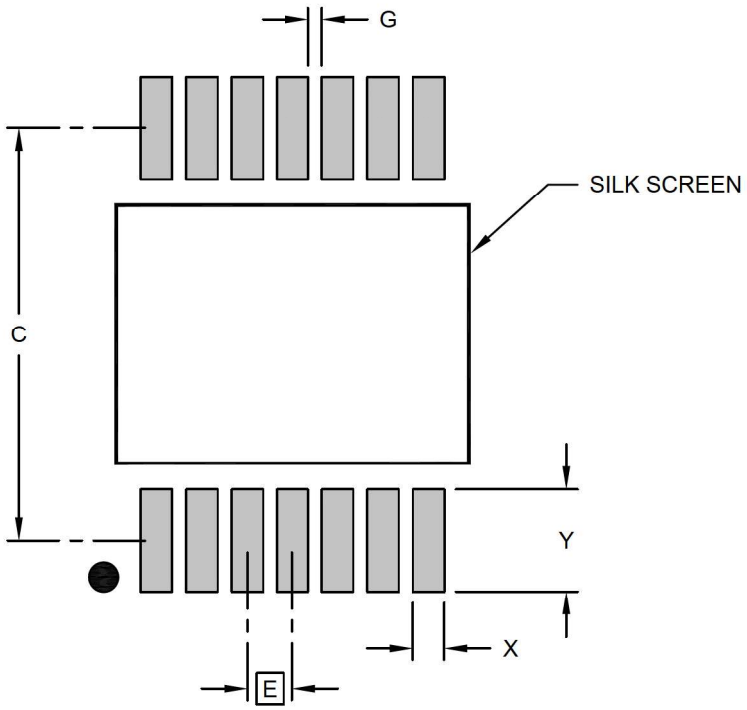

RECOMMENDED LAND PATTERN

Units		MILLIMETERS		
Dimension Limits		MIN	NOM	MAX
Contact Pitch	E	0.65 BSC		
Contact Pad Spacing	C		5.90	
Contact Pad Width (Xnn)	X			0.45
Contact Pad Length (Xnn)	Y			1.45
Contact Pad to Contact Pad (Xnn)	G	0.20		

Notes:

1. Dimensioning and tolerancing per ASME Y14.5M

BSC: Basic Dimension. Theoretically exact value shown without tolerances.

Microchip Technology Drawing C04-2087 Rev D

20-Lead Plastic Dual In-Line (P) – 300 mil Body [PDIP]

Note: For the most current package drawings, please see the Microchip Packaging Specification located at http://www.microchip.com/packaging

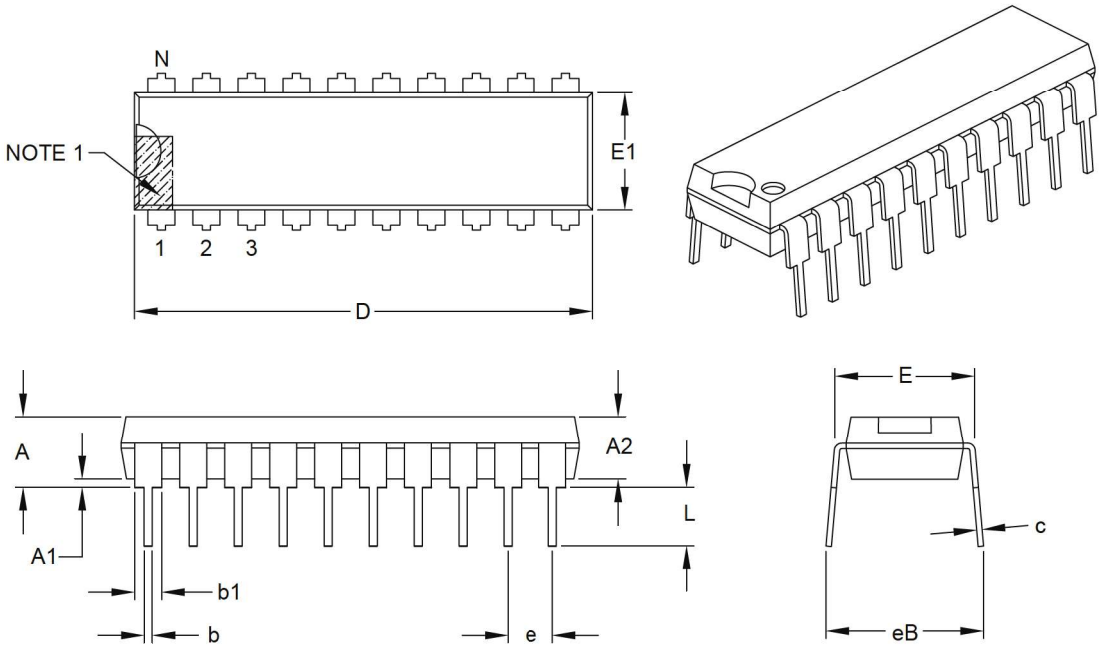

Units		INCHES		
Dimension Limits		MIN	NOM	MAX
Number of Pins	N		20	
Pitch	e		.100 BSC	
Top to Seating Plane	A	–	–	.210
Molded Package Thickness	A2	.115	.130	.195
Base to Seating Plane	A1	.015	–	–
Shoulder to Shoulder Width	E	.300	.310	.325
Molded Package Width	E1	.240	.250	.280
Overall Length	D	.980	1.030	1.060
Tip to Seating Plane	L	.115	.130	.150
Lead Thickness	c	.008	.010	.015
Upper Lead Width	b1	.045	.060	.070
Lower Lead Width	b	.014	.018	.022
Overall Row Spacing §	eB	–	–	.430

Notes:

1. Pin 1 visual index feature may vary, but must be located within the hatched area.
2. § Significant Characteristic.
3. Dimensions D and E1 do not include mold flash or protrusions. Mold flash or protrusions shall not exceed .010" per side.
4. Dimensioning and tolerancing per ASME Y14.5M.

BSC: Basic Dimension. Theoretically exact value shown without tolerances.

Microchip Technology Drawing C04-019B

20-Lead Plastic Small Outline (SO) - Wide, 7.50 mm Body [SOIC]

Note: For the most current package drawings, please see the Microchip Packaging Specification located at http://www.microchip.com/packaging

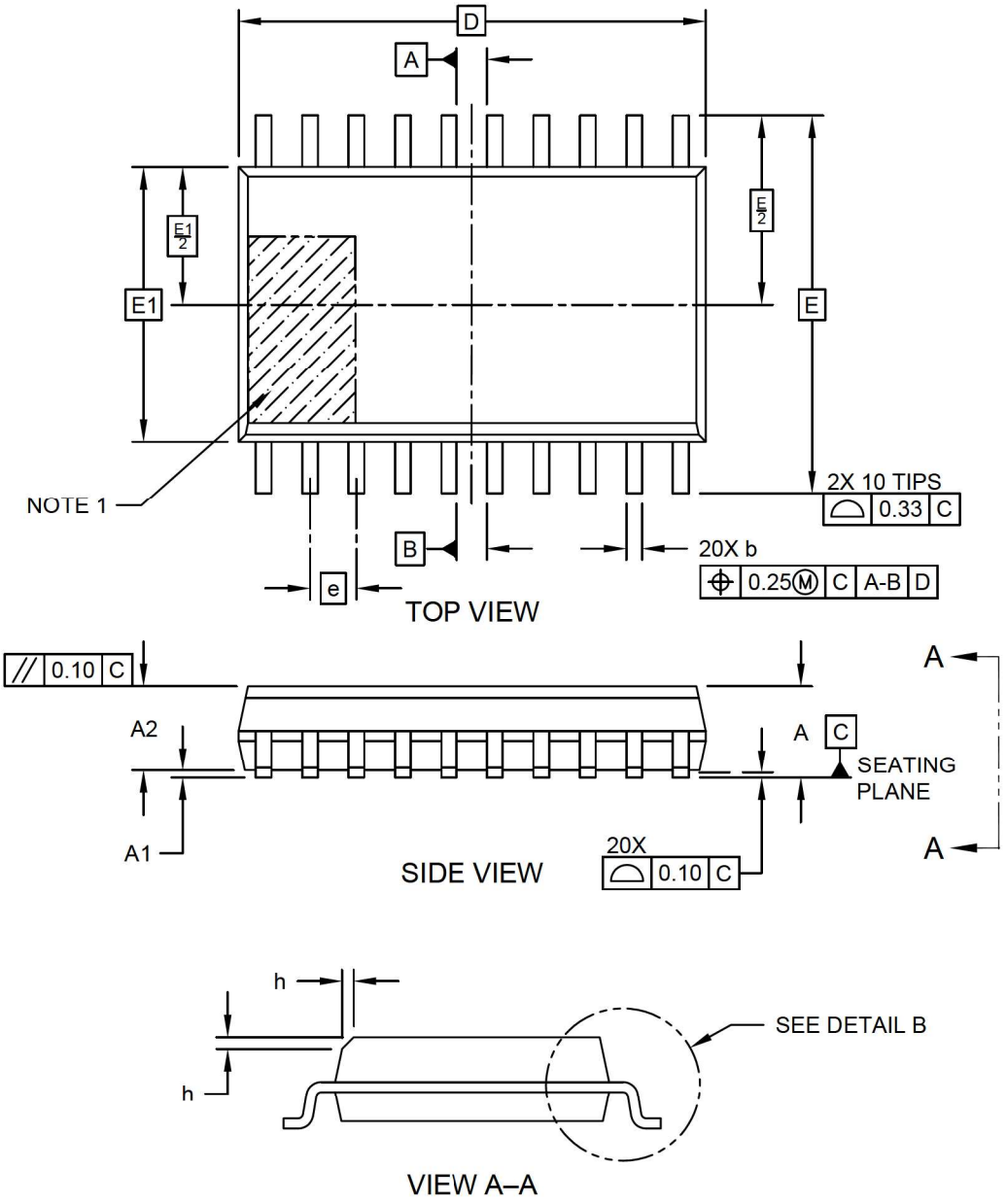

Microchip Technology Drawing C04-094 Rev D Sheet 1 of 2

20-Lead Plastic Small Outline (SO) - Wide, 7.50 mm Body [SOIC]

Note: For the most current package drawings, please see the Microchip Packaging Specification located at http://www.microchip.com/packaging

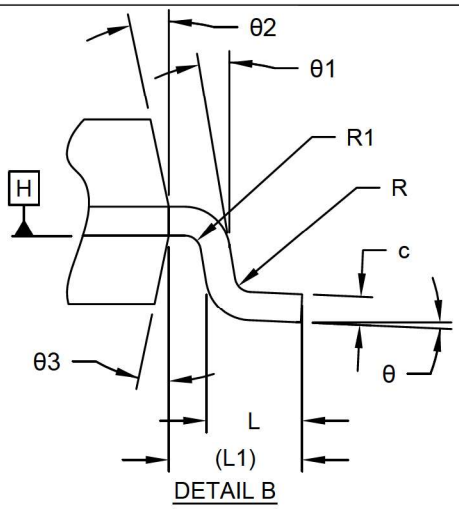

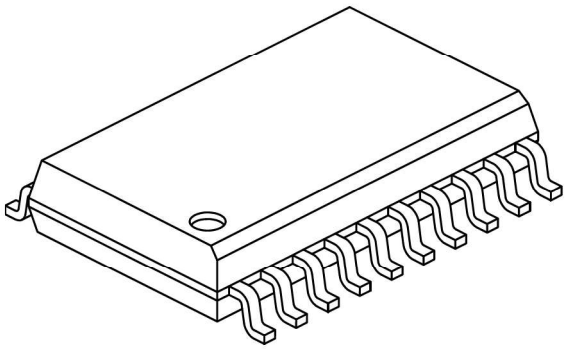

Units		MILLIMETERS		
Dimension Limits		MIN	NOM	MAX
Number of Terminals	N		20	
Pitch	e		1.27 BSC	
Overall Height	A	-	-	2.65
Standoff §	A1	0.10	-	0.30
Molded Package Thickness	A2	2.05	-	-
Overall Length	D		12.80 BSC	
Overall Width	E		10.30 BSC	
Molded Package Width	E1		7.50 BSC	
Terminal Width	b	0.31	-	0.51
Terminal Thickness	c	0.25	-	0.75
Corner Chamfer	h	0.25	-	0.41
Terminal Length	L	0.41	0.65	0.89
Footprint	L1		1.40 REF	
Lead Bend Radius	R1	0.07	-	-
Lead Bend Radius	R2	0.07	-	-
Foot Angle	θ	0°	-	8°
Lead Angle	θ1	0°	-	-
Mold Draft Angle	θ2	5°	-	15°
Mold Draft Angle	θ3	5°	-	15°

Notes:

1. Pin 1 visual index feature may vary, but must be located within the hatched area.
2. Dimensioning and tolerancing per ASME Y14.5M
   BSC: Basic Dimension. Theoretically exact value shown without tolerances.
   REF: Reference Dimension, usually without tolerance, for information purposes only.
3. Dimension D does not include mold flash, protrusions or gate burrs, which shall not exceed 0.15 mm per end. Dimension E1 does not include interlead flash or protrusion, which shall not exceed 0.25 mm per side.
4. § Significant Characteristic

Microchip Technology Drawing C04-094 Rev D Sheet 2 of 2

20-Lead Plastic Small Outline (SO) - Wide, 7.50 mm Body [SOIC]

Note: For the most current package drawings, please see the Microchip Packaging Specification located at http://www.microchip.com/packaging

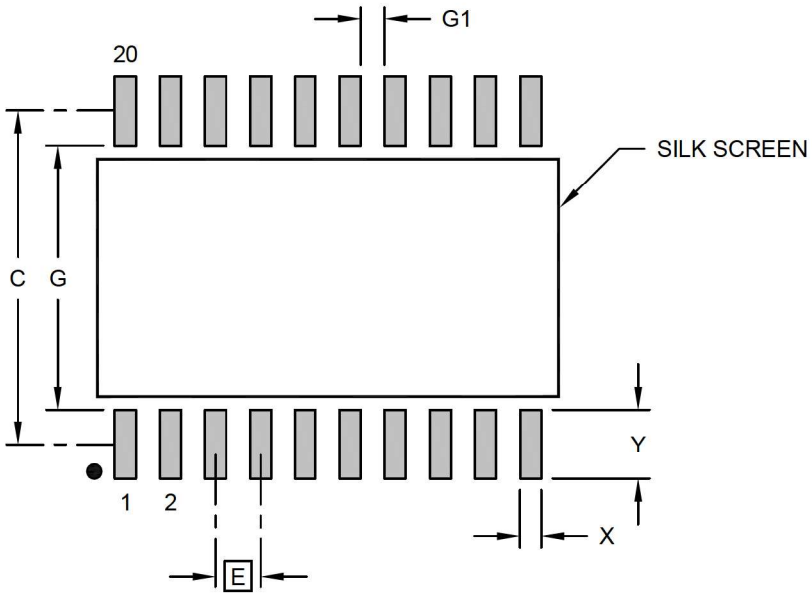

RECOMMENDED LAND PATTERN

Units		MILLIMETERS		
Dimension Limits		MIN	NOM	MAX
Contact Pitch	E		1.27 BSC	
Contact Pad Spacing	C		9.40	
Contact Pad Width (X20)	X			0.60
Contact Pad Length (X20)	Y			1.95
Contact Pad to Contact Pad	G	0.67		
Contact Pad to Contact Pad	G1	7.45		

Notes:

1. Dimensioning and tolerancing per ASME Y14.5M
   BSC: Basic Dimension. Theoretically exact value shown without tolerances.
2. For best soldering results, thermal vias, if used, should be filled or tented to avoid solder loss during reflow process

Microchip Technology Drawing C04-2094 Rev D

20-Lead Plastic Shrink Small Outline (SS) – 5.30 mm Body [SSOP]

Note: For the most current package drawings, please see the Microchip Packaging Specification located at http://www.microchip.com/packaging

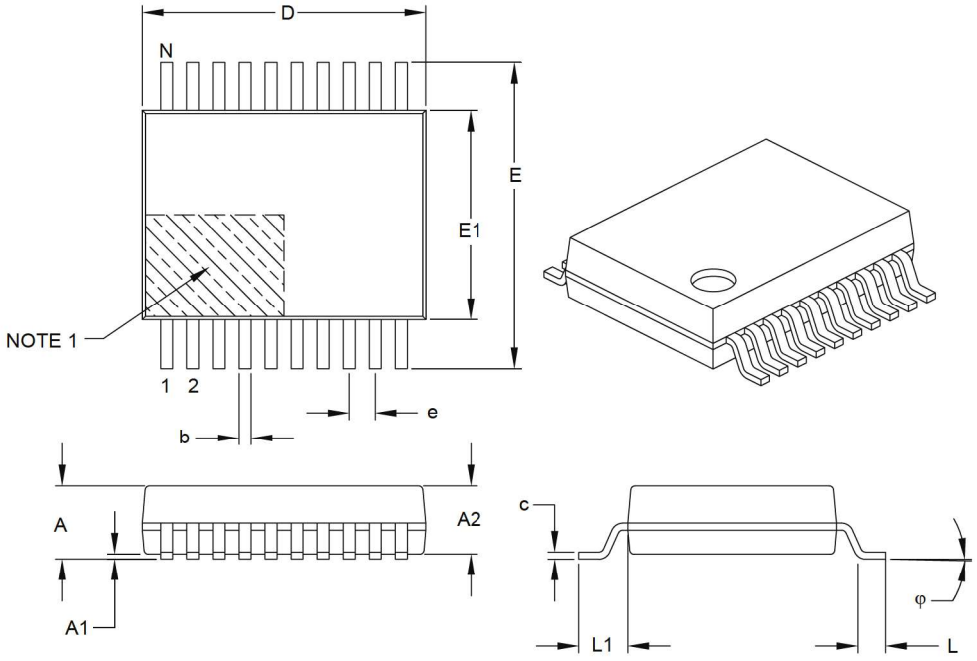

Units		MILLIMETERS		
Dimension Limits		MIN	NOM	MAX
Number of Pins	N		20	
Pitch	e		0.65 BSC	
Overall Height	A	–	–	2.00
Molded Package Thickness	A2	1.65	1.75	1.85
Standoff	A1	0.05	–	–
Overall Width	E	7.40	7.80	8.20
Molded Package Width	E1	5.00	5.30	5.60
Overall Length	D	6.90	7.20	7.50
Foot Length	L	0.55	0.75	0.95
Footprint	L1		1.25 REF	
Lead Thickness	c	0.09	–	0.25
Foot Angle	φ	0°	4°	8°
Lead Width	b	0.22	–	0.38

Notes:

1. Pin 1 visual index feature may vary, but must be located within the hatched area.
2. Dimensions D and E1 do not include mold flash or protrusions. Mold flash or protrusions shall not exceed 0.20 mm per side.
3. Dimensioning and tolerancing per ASME Y14.5M.

BSC: Basic Dimension. Theoretically exact value shown without tolerances.
REF: Reference Dimension, usually without tolerance, for information purposes only.

Microchip Technology Drawing C04-072B

20-Lead Plastic Shrink Small Outline (SS) - 5.30 mm Body [SSOP]

Note: For the most current package drawings, please see the Microchip Packaging Specification located at http://www.microchip.com/packaging

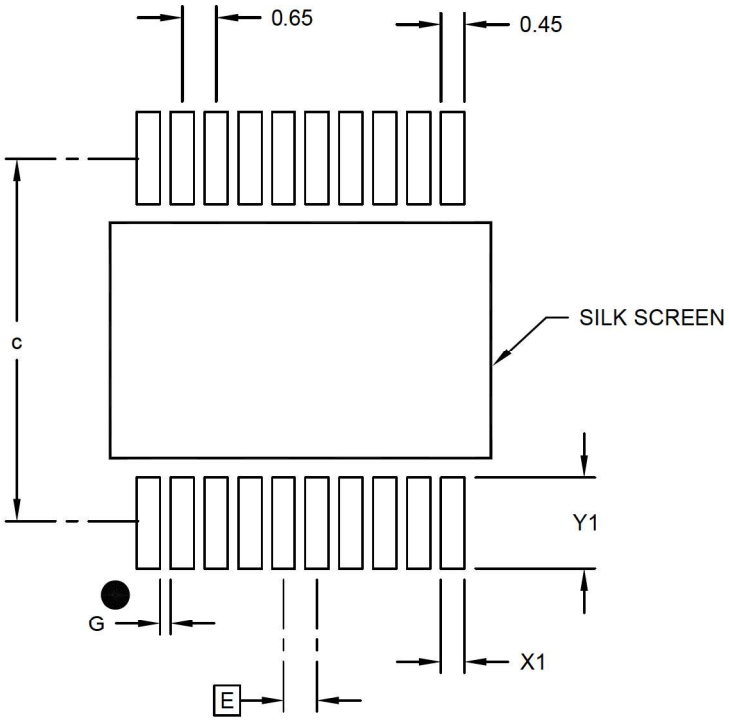

RECOMMENDED LAND PATTERN

Units		MILLIMETERS		
Dimension Limits		MIN	NOM	MAX
Contact Pitch	E	0.65 BSC		
Contact Pad Spacing	C		7.20	
Contact Pad Width (X20)	X1			0.45
Contact Pad Length (X20)	Y1			1.75
Distance Between Pads	G	0.20		

Notes:

1. Dimensioning and tolerancing per ASME Y14.5M

BSC: Basic Dimension. Theoretically exact value shown without tolerances.

Microchip Technology Drawing No. C04-2072B

20-Lead Very Thin Plastic Quad Flat, No Lead Package (REB) - 3x3 mm Body [VQFN] With 1.7 mm Exposed Pad; Atmel Legacy Global Package Code ZCL

Note:	For the most current package drawings, please see the Microchip Packaging Specification located at http://www.microchip.com/packaging

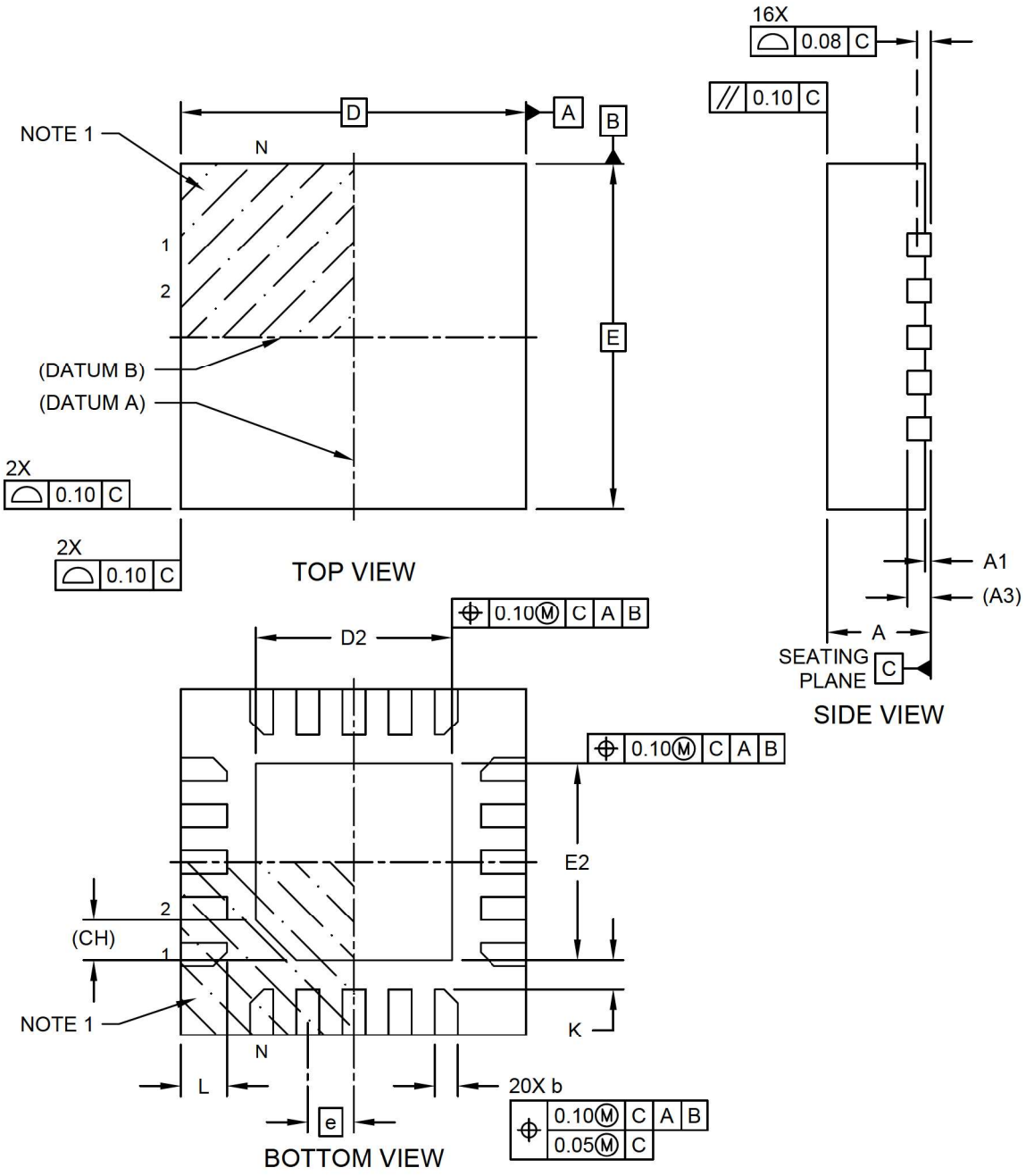

Microchip Technology Drawing C04-21380 Rev A Sheet 1 of 2

20-Lead Very Thin Plastic Quad Flat, No Lead Package (REB) - 3x3 mm Body [VQFN] With 1.7 mm Exposed Pad; Atmel Legacy Global Package Code ZCL

Note: For the most current package drawings, please see the Microchip Packaging Specification located at http://www.microchip.com/packaging

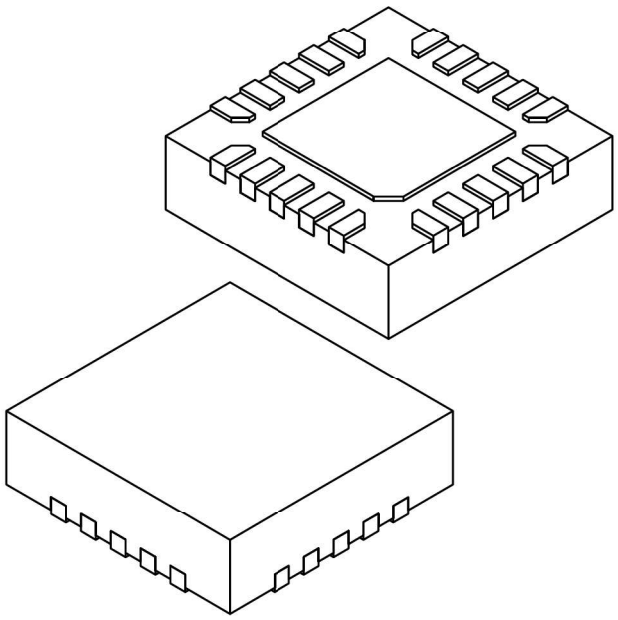

Units		MILLIMETERS		
Dimension Limits		MIN	NOM	MAX
Number of Terminals	N		20	
Pitch	e		0.40 BSC	
Overall Height	A	0.80	0.85	0.90
Standoff	A1	0.00	0.035	0.05
Terminal Thickness	A3		0.203 REF	
Overall Length	D		3.00 BSC	
Exposed Pad Length	D2	1.60	1.70	1.80
Overall Width	E		3.00 BSC	
Exposed Pad Width	E2	1.60	1.70	1.80
Terminal Width	b	0.15	0.20	0.25
Terminal Length	L	0.35	0.40	0.45
Terminal-to-Exposed-Pad	K	0.20	-	-
Pin 1 Index Chamfer	CH		0.35 REF	

Notes:

1. Pin 1 visual index feature may vary, but must be located within the hatched area.
2. Package is saw singulated
3. Dimensioning and tolerancing per ASME Y14.5M
   BSC: Basic Dimension. Theoretically exact value shown without tolerances.
   REF: Reference Dimension, usually without tolerance, for information purposes only.

Microchip Technology Drawing C04-21380 Rev A Sheet 2 of 2

20-Lead Very Thin Plastic Quad Flat, No Lead Package (REB) - 3x3 mm Body [VQFN] With 1.7 mm Exposed Pad; Atmel Legacy Global Package Code ZCL

Note: For the most current package drawings, please see the Microchip Packaging Specification located at http://www.microchip.com/packaging

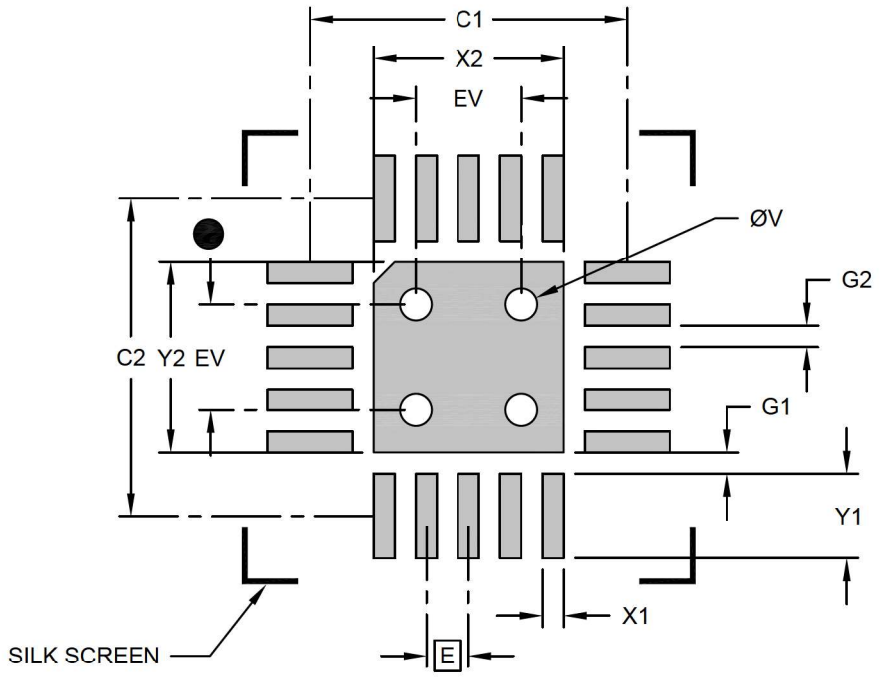

RECOMMENDED LAND PATTERN

Units		MILLIMETERS		
Dimension Limits		MIN	NOM	MAX
Contact Pitch	E		0.40 BSC	
Optional Center Pad Width	X2			1.80
Optional Center Pad Length	Y2			1.80
Contact Pad Spacing	C1		3.00	
Contact Pad Spacing	C2		3.00	
Contact Pad Width (X20)	X1			0.20
Contact Pad Length (X20)	Y1			0.80
Contact Pad to Center Pad (X20)	G1	0.20		
Contact Pad to Contact Pad (X16)	G2	0.20		
Thermal Via Diameter	V		0.30	
Thermal Via Pitch	EV		1.00	

Notes:

1. Dimensioning and tolerancing per ASME Y14.5M
   BSC: Basic Dimension. Theoretically exact value shown without tolerances.
2. For best soldering results, thermal vias, if used, should be filled or tented to avoid solder loss during reflow process

Microchip Technology Drawing C04-23380 Rev A

50. Appendix A: Revision History

Doc Rev.	Date	Comments
B	10/2020	Updating NVM chapter, I^2C chapter, and UART chapter with grammatical edits and updated features.
A	04/2020	Initial document release.

The Microchip Website

Microchip provides online support via our website at www.microchip.com/. This website is used to make files and information easily available to customers. Some of the content available includes:

- **Product Support** – Data sheets and errata, application notes and sample programs, design resources, user's guides and hardware support documents, latest software releases and archived software
- **General Technical Support** – Frequently Asked Questions (FAQs), technical support requests, online discussion groups, Microchip design partner program member listing
- **Business of Microchip** – Product selector and ordering guides, latest Microchip press releases, listing of seminars and events, listings of Microchip sales offices, distributors and factory representatives

Product Change Notification Service

Microchip's product change notification service helps keep customers current on Microchip products. Subscribers will receive email notification whenever there are changes, updates, revisions or errata related to a specified product family or development tool of interest.

To register, go to www.microchip.com/pcn and follow the registration instructions.

Customer Support

Users of Microchip products can receive assistance through several channels:

- Distributor or Representative
- Local Sales Office
- Embedded Solutions Engineer (ESE)
- Technical Support

Customers should contact their distributor, representative or ESE for support. Local sales offices are also available to help customers. A listing of sales offices and locations is included in this document.

Technical support is available through the website at: www.microchip.com/support

Product Identification System

To order or obtain information, e.g., on pricing or delivery, refer to the factory or the listed sales office.

PART NO.	[X](1)	–X	/XX
Device	Tape and Reel	Temperature Range	Package

Device:	PIC18F04Q40, PIC18F14Q40, PIC18F05Q40, PIC18F15Q40, PIC18F06Q40, PIC18F16Q40	
Tape & Reel Option:	Blank	= Tube
	T	= Tape & Reel
Temperature Range:	I	= -40°C to +85°C (Industrial)
	E	= -40°C to +125°C (Extended)
Package:	SL	= 14-lead SOIC
	ST	= 14-lead TSSOP
	P	= 20-lead PDIP
	SO	= 20-lead SOIC
	SS	= 20-lead SSOP
	REB	= 20-lead VQFN

Examples:

- PIC18F04Q40 T-E/ST: Tape and Reel, Extended temperature, 14-lead TSSOP
- PIC18F15Q40 T-I/REB: Tape and Reel, Industrial temperature, 20-lead VQFN
- PIC18F16Q40 T-I/SO: Tape and Reel, Industrial temperature, 20-lead SOIC

Notes:

1. Tape and Reel identifier only appears in the catalog part number description. This identifier is used for ordering purposes and is not printed on the device package. Check with your Microchip Sales Office for package availability with the Tape and Reel option.
2. Small form-factor packaging options may be available. Please check www.microchip.com/packaging for small-form factor package availability, or contact your local Sales Office.

Microchip Devices Code Protection Feature

Note the following details of the code protection feature on Microchip devices:

- Microchip products meet the specifications contained in their particular Microchip Data Sheet.
- Microchip believes that its family of products is secure when used in the intended manner and under normal conditions.
- There are dishonest and possibly illegal methods being used in attempts to breach the code protection features of the Microchip devices. We believe that these methods require using the Microchip products in a manner outside the operating specifications contained in Microchip's Data Sheets. Attempts to breach these code protection features, most likely, cannot be accomplished without violating Microchip's intellectual property rights.
- Microchip is willing to work with any customer who is concerned about the integrity of its code.
- Neither Microchip nor any other semiconductor manufacturer can guarantee the security of its code. Code protection does not mean that we are guaranteeing the product is "unbreakable." Code protection is constantly evolving. We at Microchip are committed to continuously improving the code protection features of our products. Attempts to break Microchip's code protection feature may be a violation of the Digital Millennium Copyright Act.

© 2020 Microchip Technology Inc.

If such acts allow unauthorized access to your software or other copyrighted work, you may have a right to sue for relief under that Act.

Legal Notice

Information contained in this publication is provided for the sole purpose of designing with and using Microchip products. Information regarding device applications and the like is provided only for your convenience and may be superseded by updates. It is your responsibility to ensure that your application meets with your specifications.

THIS INFORMATION IS PROVIDED BY MICROCHIP “AS IS”. MICROCHIP MAKES NO REPRESENTATIONS OR WARRANTIES OF ANY KIND WHETHER EXPRESS OR IMPLIED, WRITTEN OR ORAL, STATUTORY OR OTHERWISE, RELATED TO THE INFORMATION INCLUDING BUT NOT LIMITED TO ANY IMPLIED WARRANTIES OF NON-INFRINGEMENT, MERCHANTABILITY, AND FITNESS FOR A PARTICULAR PURPOSE OR WARRANTIES RELATED TO ITS CONDITION, QUALITY, OR PERFORMANCE.

IN NO EVENT WILL MICROCHIP BE LIABLE FOR ANY INDIRECT, SPECIAL, PUNITIVE, INCIDENTAL OR CONSEQUENTIAL LOSS, DAMAGE, COST OR EXPENSE OF ANY KIND WHATSOEVER RELATED TO THE INFORMATION OR ITS USE, HOWEVER CAUSED, EVEN IF MICROCHIP HAS BEEN ADVISED OF THE POSSIBILITY OR THE DAMAGES ARE FORESEEABLE. TO THE FULLEST EXTENT ALLOWED BY LAW, MICROCHIP'S TOTAL LIABILITY ON ALL CLAIMS IN ANY WAY RELATED TO THE INFORMATION OR ITS USE WILL NOT EXCEED THE AMOUNT OF FEES, IF ANY, THAT YOU HAVE PAID DIRECTLY TO MICROCHIP FOR THE INFORMATION. Use of Microchip devices in life support and/or safety applications is entirely at the buyer’s risk, and the buyer agrees to defend, indemnify and hold harmless Microchip from any and all damages, claims, suits, or expenses resulting from such use. No licenses are conveyed, implicitly or otherwise, under any Microchip intellectual property rights unless otherwise stated.

Trademarks

The Microchip name and logo, the Microchip logo, Adaptec, AnyRate, AVR, AVR logo, AVR Freaks, BesTime, BitCloud, chipKIT, chipKIT logo, CryptoMemory, CryptoRF, dsPIC, FlashFlex, flexPWR, HELDO, IGLOO, JukeBlox, KeeLoq, Kleer, LANCheck, LinkMD, maXStylus, maXTouch, MediaLB, megaAVR, Microsemi, Microsemi logo, MOST, MOST logo, MPLAB, OptoLyzer, PackeTime, PIC, picoPower, PICSTART, PIC32 logo, PolarFire, Prochip Designer, QTouch, SAM-BA, SenGenuity, SpyNIC, SST, SST Logo, SuperFlash, Symmetricom, SyncServer, Tachyon, TimeSource, tinyAVR, UNI/O, Vectron, and XMEGA are registered trademarks of Microchip Technology Incorporated in the U.S.A. and other countries.

AgileSwitch, APT, ClockWorks, The Embedded Control Solutions Company, EtherSynch, FlashTec, Hyper Speed Control, HyperLight Load, IntelliMOS, Libero, motorBench, mTouch, Powermite 3, Precision Edge, ProASIC, ProASIC Plus, ProASIC Plus logo, Quiet-Wire, SmartFusion, SyncWorld, Temux, TimeCesium, TimeHub, TimePictra, TimeProvider, WinPath, and ZL are registered trademarks of Microchip Technology Incorporated in the U.S.A.

Adjacent Key Suppression, AKS, Analog-for-the-Digital Age, Any Capacitor, AnyIn, AnyOut, Augmented Switching, BlueSky, BodyCom, CodeGuard, CryptoAuthentication, CryptoAutomotive, CryptoCompanion, CryptoController, dsPICDEM, dsPICDEM.net, Dynamic Average Matching, DAM, ECAN, Espresso T1S, EtherGREEN, IdealBridge, In-Circuit Serial Programming, ICSP, INICnet, Intelligent Paralleling, Inter-Chip Connectivity, JitterBlocker, maxCrypto, maxView, memBrain, Mindi, MiWi, MPASM, MPF, MPLAB Certified logo, MPLIB, MPLINK, MultiTRAK, NetDetach, Omniscient Code Generation, PICDEM, PICDEM.net, PICkit, PICtail, PowerSmart, PureSilicon, QMatrix, REAL ICE, Ripple Blocker, RTAX, RTG4, SAM-ICE, Serial Quad I/O, simpleMAP, SimpliPHY, SmartBuffer, SMART-I.S., storClad, SQI, SuperSwitcher, SuperSwitcher II, Switchtec, SynchroPHY, Total Endurance, TSHARC, USBCheck, VariSense, VectorBlox, VeriPHY, ViewSpan, WiperLock, XpressConnect, and ZENA are trademarks of Microchip Technology Incorporated in the U.S.A. and other countries.

SQTP is a service mark of Microchip Technology Incorporated in the U.S.A.

The Adaptec logo, Frequency on Demand, Silicon Storage Technology, and Symmcom are registered trademarks of Microchip Technology Inc. in other countries.

GestIC is a registered trademark of Microchip Technology Germany II GmbH & Co. KG, a subsidiary of Microchip Technology Inc., in other countries.

All other trademarks mentioned herein are property of their respective companies.

© 2020, Microchip Technology Incorporated, Printed in the U.S.A., All Rights Reserved.

ISBN: 978-1-5224-6913-1

Quality Management System

For information regarding Microchip's Quality Management Systems, please visit www.microchip.com/quality.

Worldwide Sales and Service

AMERICAS	ASIA/PACIFIC	ASIA/PACIFIC	EUROPE
Corporate Office 2355 West Chandler Blvd. Chandler, AZ 85224-6199 Tel: 480-792-7200 Fax: 480-792-7277 Technical Support: www.microchip.com/support Web Address: www.microchip.com **Atlanta** Duluth, GA Tel: 678-957-9614 Fax: 678-957-1455 **Austin, TX** Tel: 512-257-3370 **Boston** Westborough, MA Tel: 774-760-0087 Fax: 774-760-0088 **Chicago** Itasca, IL Tel: 630-285-0071 Fax: 630-285-0075 **Dallas** Addison, TX Tel: 972-818-7423 Fax: 972-818-2924 **Detroit** Novi, MI Tel: 248-848-4000 **Houston, TX** Tel: 281-894-5983 **Indianapolis** Noblesville, IN Tel: 317-773-8323 Fax: 317-773-5453 Tel: 317-536-2380 **Los Angeles** Mission Viejo, CA Tel: 949-462-9523 Fax: 949-462-9608 Tel: 951-273-7800 **Raleigh, NC** Tel: 919-844-7510 **New York, NY** Tel: 631-435-6000 **San Jose, CA** Tel: 408-735-9110 Tel: 408-436-4270 **Canada - Toronto** Tel: 905-695-1980 Fax: 905-695-2078	**Australia - Sydney** Tel: 61-2-9868-6733 **China - Beijing** Tel: 86-10-8569-7000 **China - Chengdu** Tel: 86-28-8665-5511 **China - Chongqing** Tel: 86-23-8980-9588 **China - Dongguan** Tel: 86-769-8702-9880 **China - Guangzhou** Tel: 86-20-8755-8029 **China - Hangzhou** Tel: 86-571-8792-8115 **China - Hong Kong SAR** Tel: 852-2943-5100 **China - Nanjing** Tel: 86-25-8473-2460 **China - Qingdao** Tel: 86-532-8502-7355 **China - Shanghai** Tel: 86-21-3326-8000 **China - Shenyang** Tel: 86-24-2334-2829 **China - Shenzhen** Tel: 86-755-8864-2200 **China - Suzhou** Tel: 86-186-6233-1526 **China - Wuhan** Tel: 86-27-5980-5300 **China - Xian** Tel: 86-29-8833-7252 **China - Xiamen** Tel: 86-592-2388138 **China - Zhuhai** Tel: 86-756-3210040	**India - Bangalore** Tel: 91-80-3090-4444 **India - New Delhi** Tel: 91-11-4160-8631 **India - Pune** Tel: 91-20-4121-0141 **Japan - Osaka** Tel: 81-6-6152-7160 **Japan - Tokyo** Tel: 81-3-6880- 3770 **Korea - Daegu** Tel: 82-53-744-4301 **Korea - Seoul** Tel: 82-2-554-7200 **Malaysia - Kuala Lumpur** Tel: 60-3-7651-7906 **Malaysia - Penang** Tel: 60-4-227-8870 **Philippines - Manila** Tel: 63-2-634-9065 **Singapore** Tel: 65-6334-8870 **Taiwan - Hsin Chu** Tel: 886-3-577-8366 **Taiwan - Kaohsiung** Tel: 886-7-213-7830 **Taiwan - Taipei** Tel: 886-2-2508-8600 **Thailand - Bangkok** Tel: 66-2-694-1351 **Vietnam - Ho Chi Minh** Tel: 84-28-5448-2100	**Austria - Wels** Tel: 43-7242-2244-39 Fax: 43-7242-2244-393 **Denmark - Copenhagen** Tel: 45-4485-5910 Fax: 45-4485-2829 **Finland - Espoo** Tel: 358-9-4520-820 **France - Paris** Tel: 33-1-69-53-63-20 Fax: 33-1-69-30-90-79 **Germany - Garching** Tel: 49-8931-9700 **Germany - Haan** Tel: 49-2129-3766400 **Germany - Heilbronn** Tel: 49-7131-72400 **Germany - Karlsruhe** Tel: 49-721-625370 **Germany - Munich** Tel: 49-89-627-144-0 Fax: 49-89-627-144-44 **Germany - Rosenheim** Tel: 49-8031-354-560 **Israel - Ra'anana** Tel: 972-9-744-7705 **Italy - Milan** Tel: 39-0331-742611 Fax: 39-0331-466781 **Italy - Padova** Tel: 39-049-7625286 **Netherlands - Drunen** Tel: 31-416-690399 Fax: 31-416-690340 **Norway - Trondheim** Tel: 47-72884388 **Poland - Warsaw** Tel: 48-22-3325737 **Romania - Bucharest** Tel: 40-21-407-87-50 **Spain - Madrid** Tel: 34-91-708-08-90 Fax: 34-91-708-08-91 **Sweden - Gothenberg** Tel: 46-31-704-60-40 **Sweden - Stockholm** Tel: 46-8-5090-4654 **UK - Wokingham** Tel: 44-118-921-5800 Fax: 44-118-921-5820

© 2020 Microchip Technology Inc.